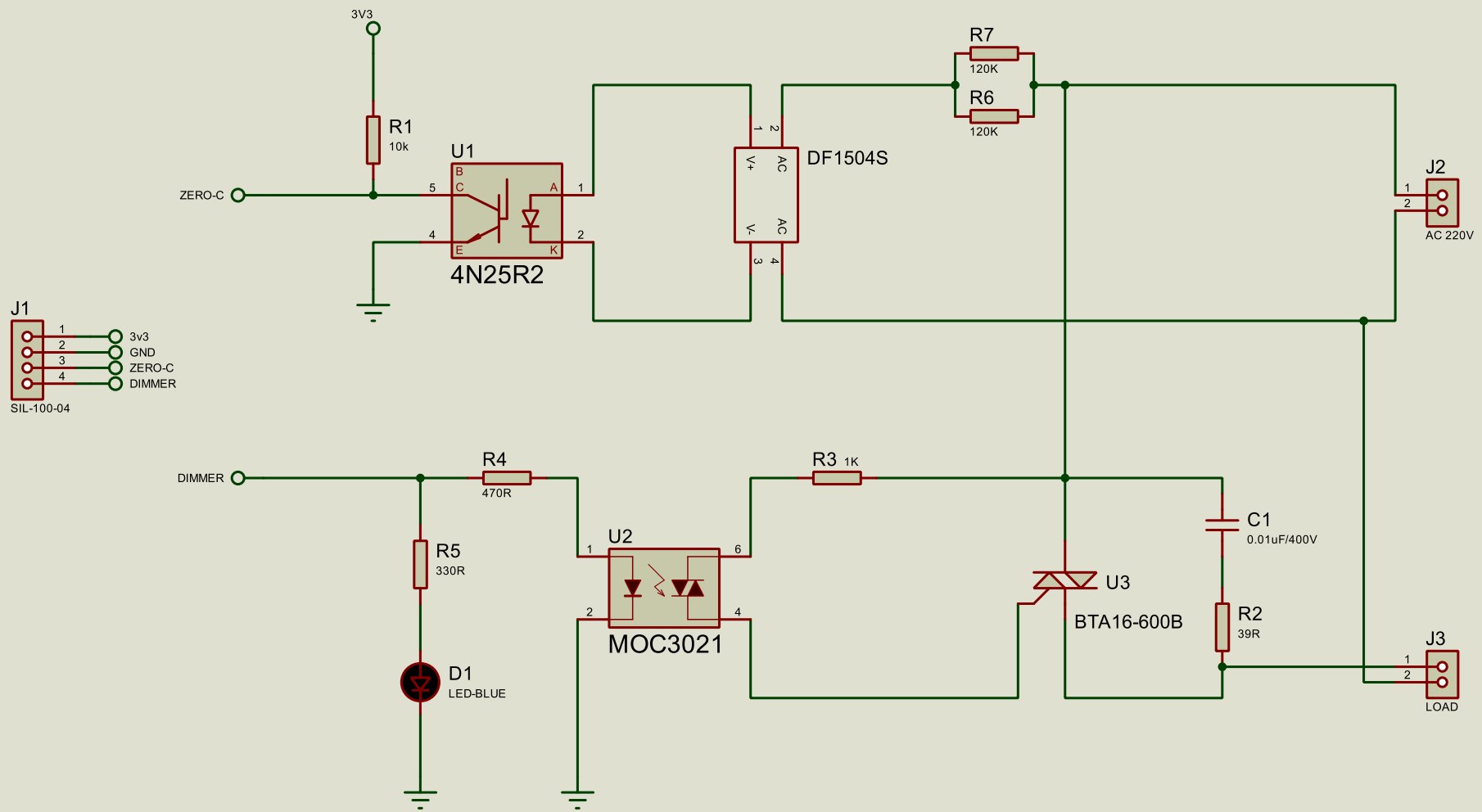

FILE NAME: ESP32.pdsprj	DATE: 3/17/2026
DESIGN TITLE: HOT AIR GUN PROJECT	PAGE: 1 of 4
PATH: F:\ESP32.pdsprj	
BY: THIAN GANI REV:	TIME: 7:33 PM
BOARD: @BOARD	

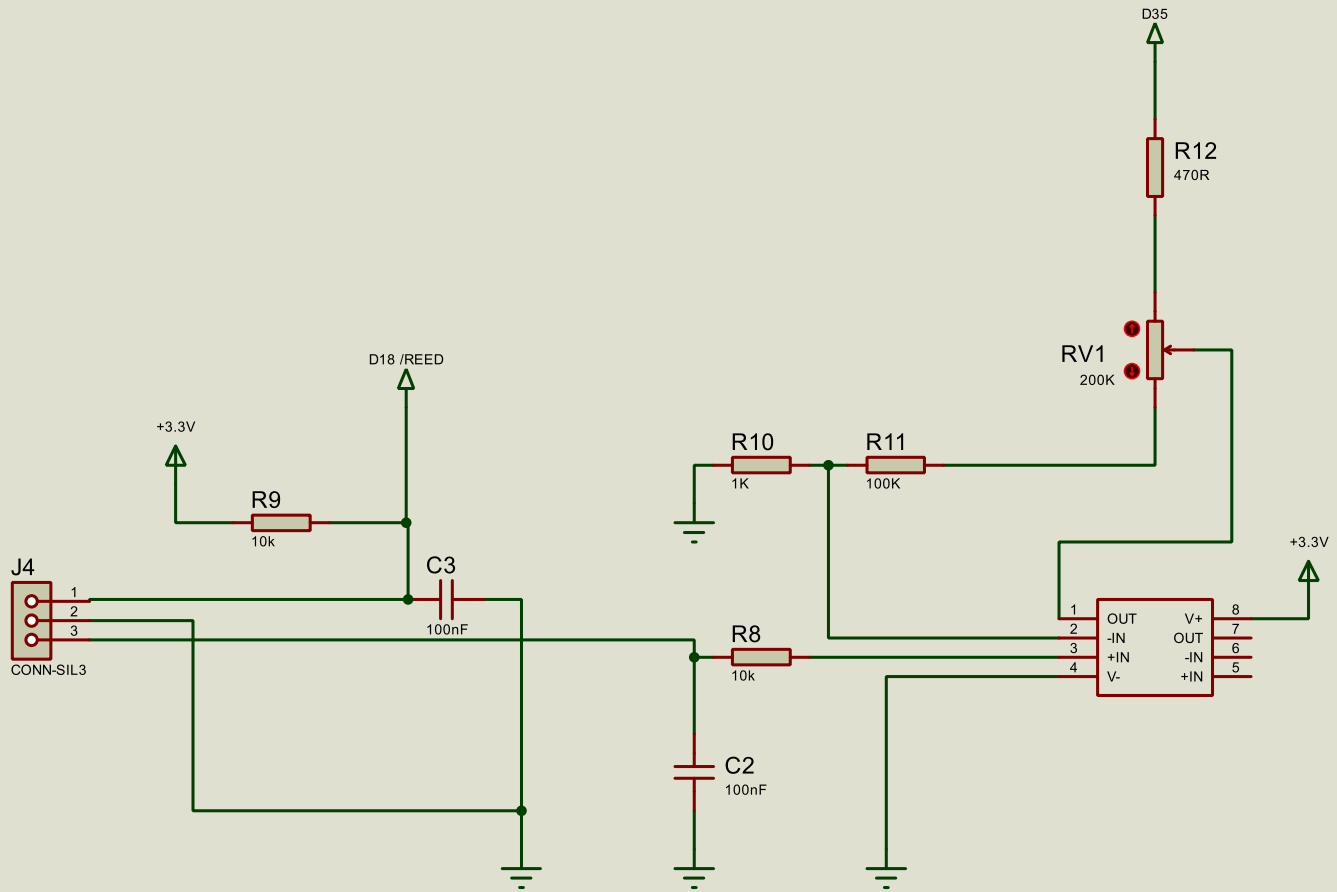

FILE NAME: ESP32.pdsprj	DATE: 3/17/2026
DESIGN TITLE: HOT AIR GUN PROJECT	PAGE: 2 of 4
PATH: F:\ESP32.pdsprj	
BY: THIAN GANI	REV:
BOARD: @BOARD	TIME: 7:33 PM

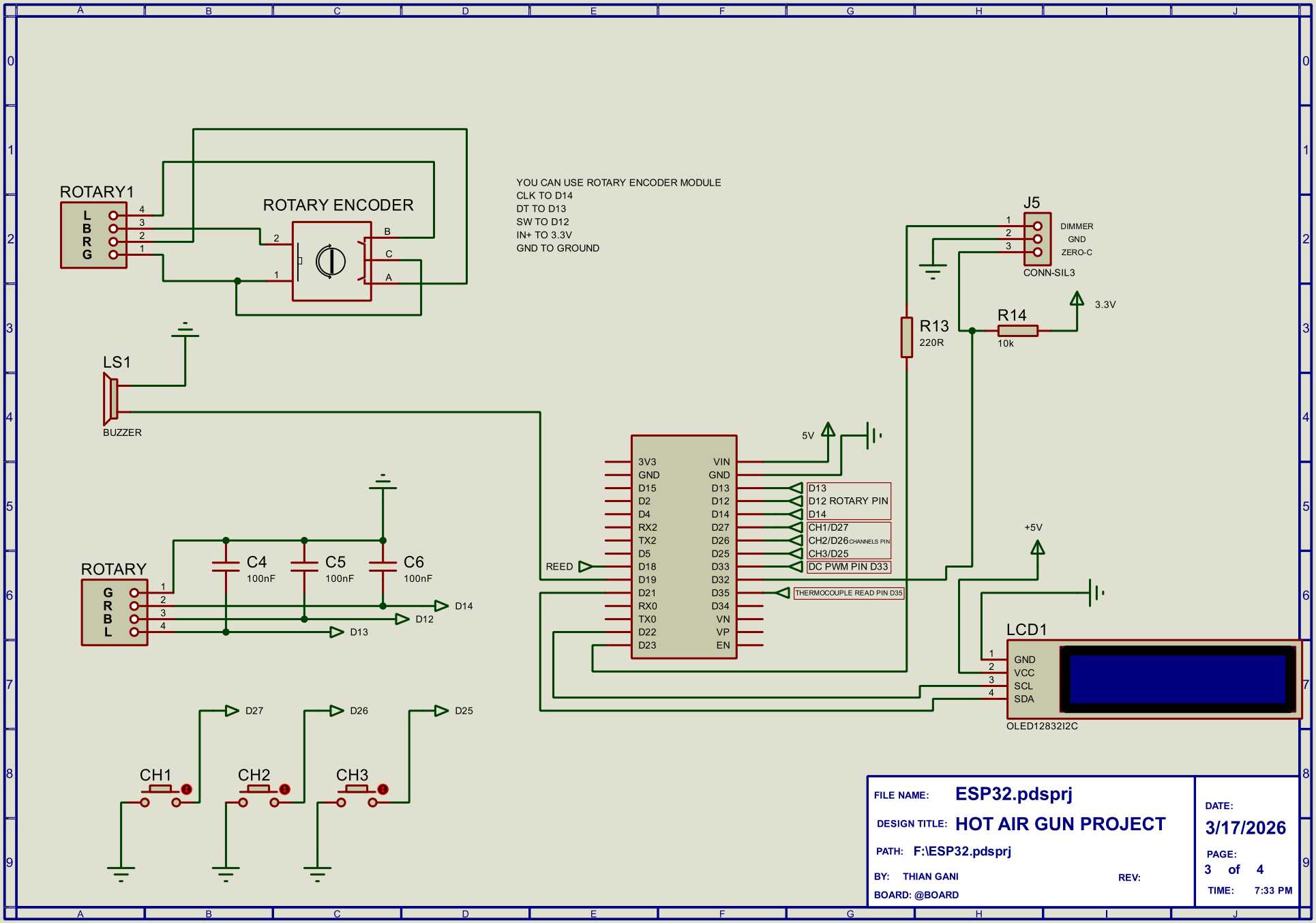
ROTARY1
L
B
R
G
ROTARY ENCODER
B
C
A
YOU CAN USE ROTARY ENCODER MODULE
CLK TO D14
DT TO D13
SW TO D12
IN+ TO 3.3V
GND TO GROUND
J5
DIMMER
GND
ZERO-C
CONN-SIL3
3.3V
R13
220R
R14
10k
LS1
BUZZER
5V
3V3
GND
D15
D2
D4
RX2
TX2
D5
D18
D19
D21
RX0
TX0
D22
D23
VIN
GND
D13
D12
D14
D27
D26
D25
D33
D32
D35
D34
VN
VP
EN
D13
D12 ROTARY PIN
D14
CH1/D27
CH2/D26 CHANNELS PIN
CH3/D25
DC PWM PIN D33
THERMOCOUPLE READ PIN D35
REED
ROTARY
G
R
B
L
C4
100nF
C5
100nF
C6
100nF
D14
D12
D13
+5V
LCD1
GND
VCC
SCL
SDA
OLED12832I2C
D27
D26
D25
CH1
CH2
CH3
FILE NAME: ESP32.pdsprj
DESIGN TITLE: HOT AIR GUN PROJECT
PATH: F:\ESP32.pdsprj
BY: THIAN GANI
REV:
BOARD: @BOARD
DATE: 3/17/2026
PAGE: 3 of 4
TIME: 7:33 PM

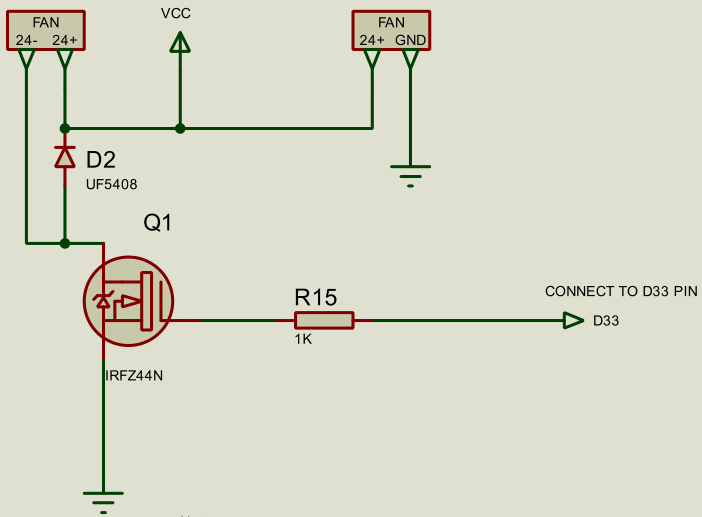

Note:
You can use a ready-made DC PWM module.

FILE NAME:	ESP32.pdsprj	DATE:	3/17/2026
DESIGN TITLE:	HOT AIR GUN PROJECT	PAGE:	4 of 4
PATH:	F:\ESP32.pdsprj		
BY:	THIAN GANI	REV:	
BOARD:	@BOARD	TIME:	7:33 PM