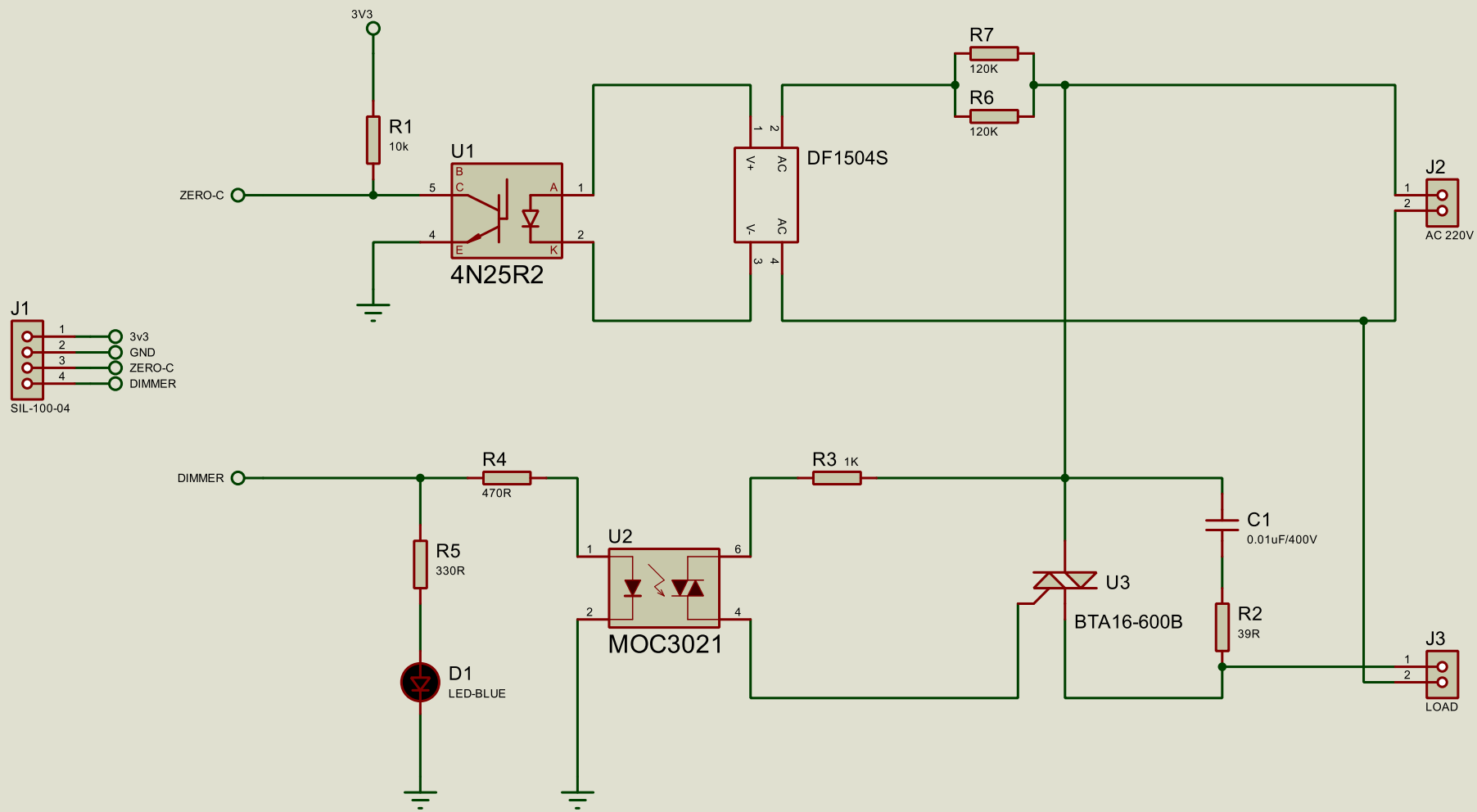

FILE NAME: ESP32.pdsprj	DATE: 3/17/2026
DESIGN TITLE: HOT AIR GUN PROJECT	PAGE: 1 of 4
PATH: F:\ESP32.pdsprj	
BY: THIAN GANI REV:	TIME: 6:11 PM
BOARD: @BOARD	

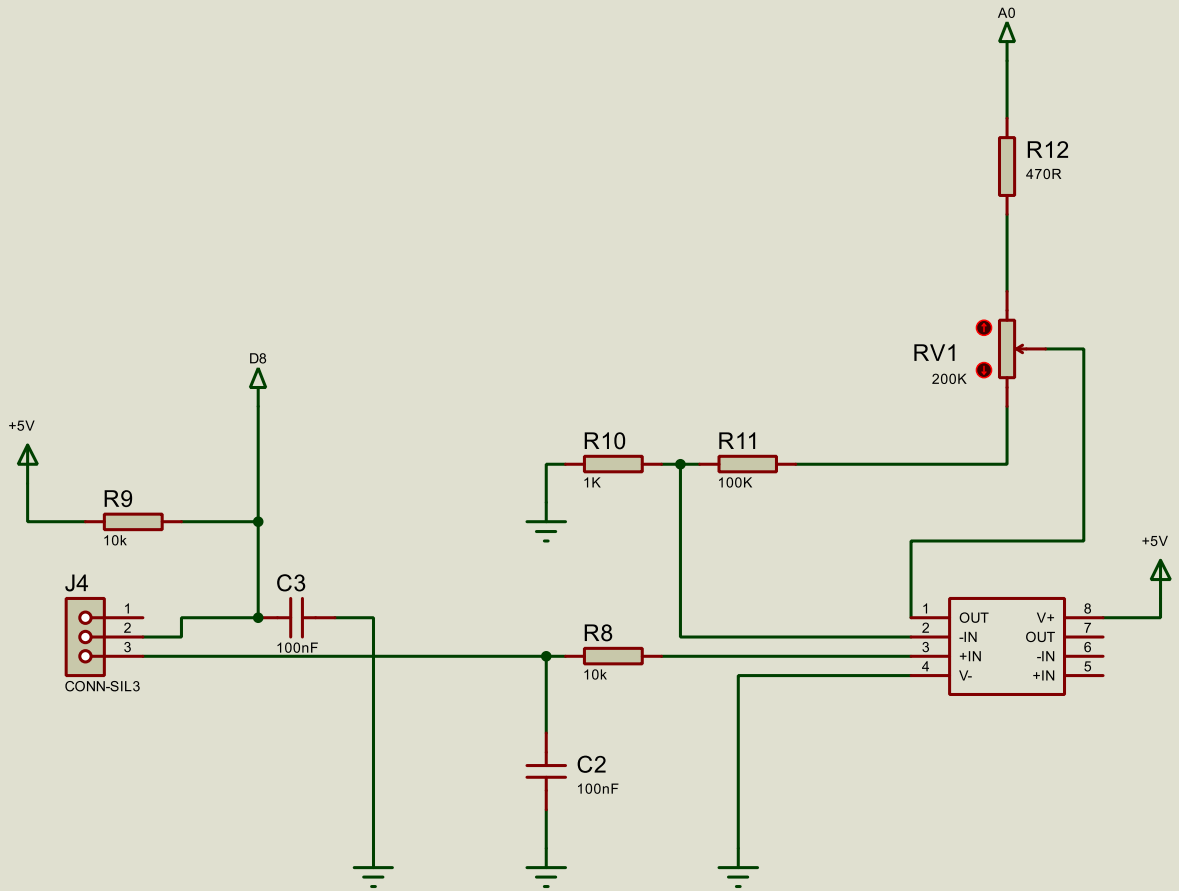

FILE NAME: ESP32.pdsprj	DATE: 3/17/2026
DESIGN TITLE: HOT AIR GUN PROJECT	PAGE: 2 of 4
PATH: F:\ESP32.pdsprj	
BY: THIAN GANI	REV:
BOARD: @BOARD	TIME: 6:11 PM

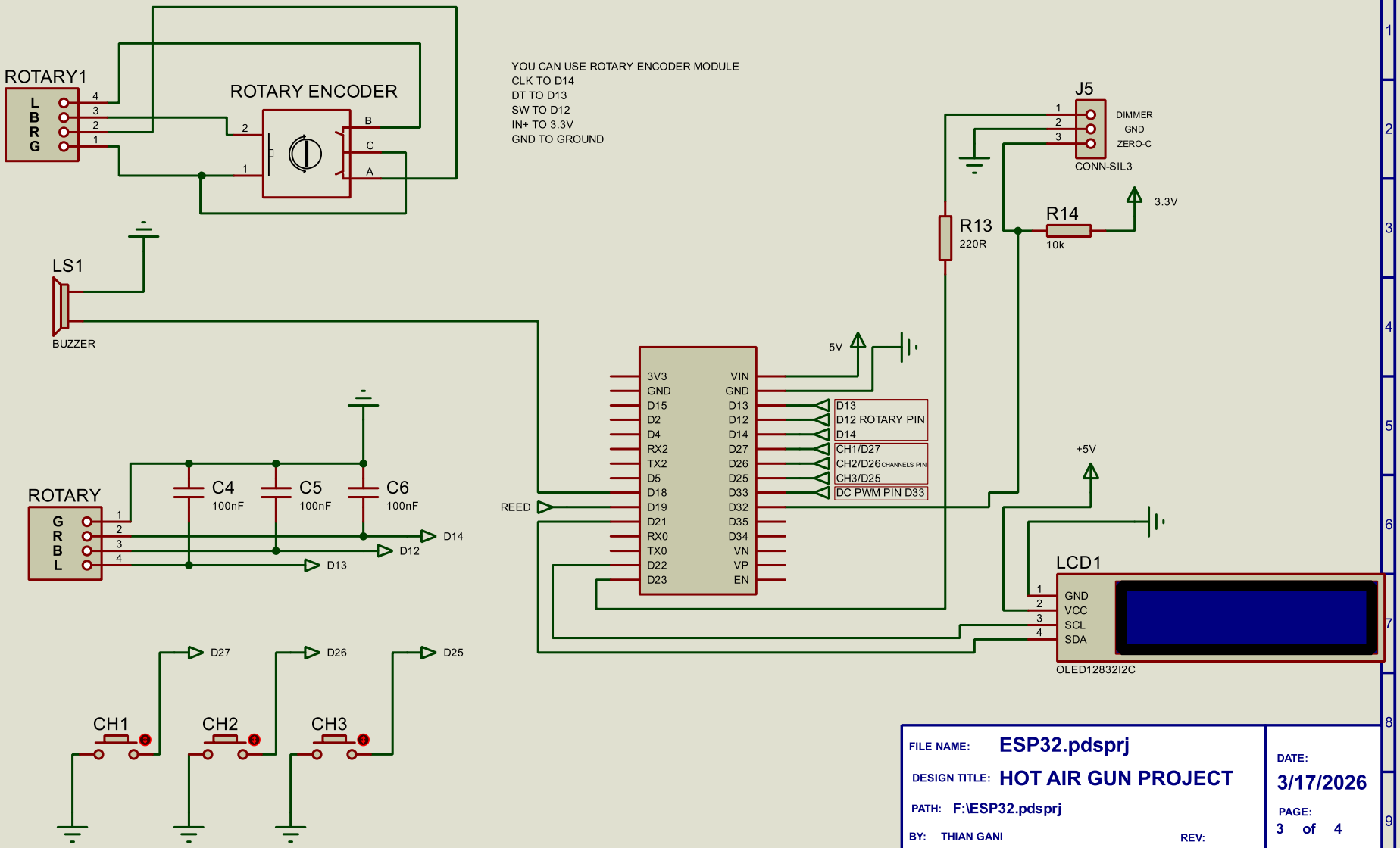

FILE NAME: ESP32.pdsprj	DATE: 3/17/2026
DESIGN TITLE: HOT AIR GUN PROJECT	PAGE: 3 of 4
PATH: F:\ESP32.pdsprj	
BY: THIAN GANI	REV:
BOARD: @BOARD	TIME: 6:11 PM

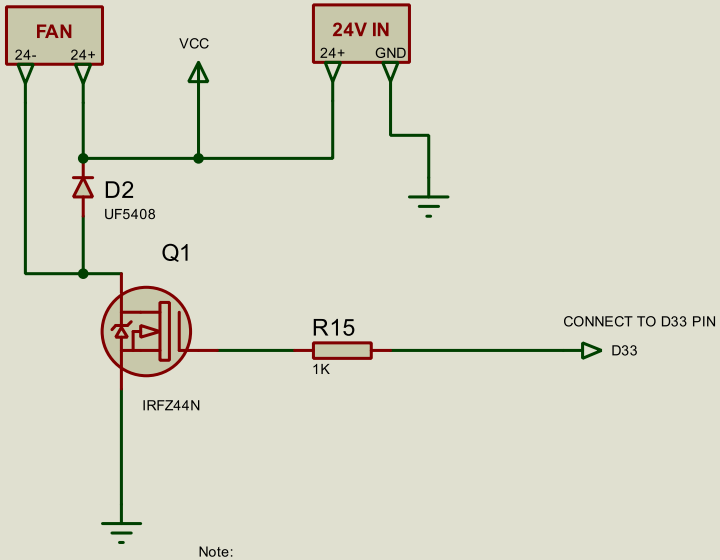

Note:
You can use a ready-made DC PWM module.

FILE NAME: ESP32.pdsprj	DATE: 3/17/2026
DESIGN TITLE: HOT AIR GUN PROJECT	PAGE: 4 of 4
PATH: F:\ESP32.pdsprj	
BY: THIAN GANI	REV:
BOARD: @BOARD	TIME: 6:11 PM