P1:	M-Y321A
	M-321A
P3: M-426C	

Customer No:	No:

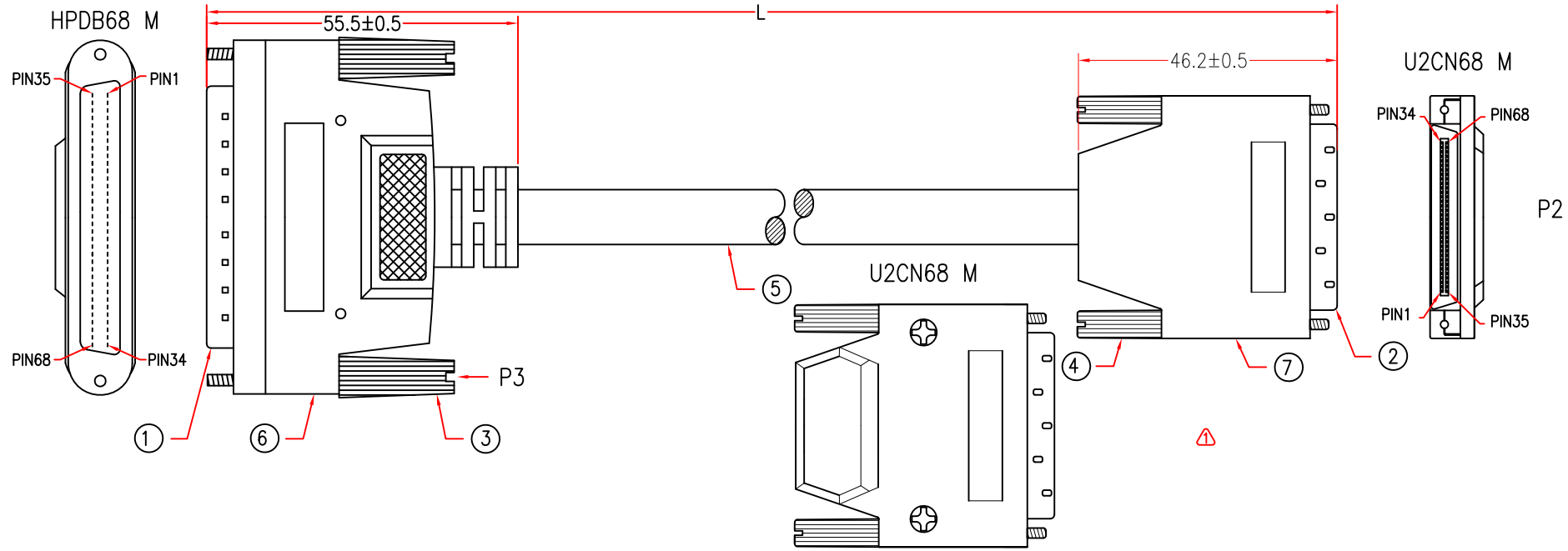

NOTE: All relevant materials are complied with RoHS directive .

3245

P1		P2	P1		P2	P1		P2
BROWN	1	1	YELLOW/RED	13	13	PURPLE/YELLOW	25	25
BROWN/WHITE	35	35	YELLOW/BLUE	47	47	PURPLE/BLACK	59	59
BROWN/RED	2	2	YELLOW/GREEN	14	14	PURPLE/GREEN	26	26
BROWN/BLUE	36	36	GREEN/BROWN	48	48	PURPLE/BROWN	60	60
BROWN/BLACK	3	3	YELLOW/BROWN	15	15	GREY	27	27
BLACK/YELLOW	37	37	BROWN/GREEN	49	49	GREY/BROWN	61	61
RED	4	4	YELLOW/BLACK	16	16	GREY/RED	28	28
RED/WHITE	38	38	BROWN/YELLOW	50	50	GREY/BLUE	62	62
RED/YELLOW	5	5	GREEN	17	17	GREY/YELLOW	29	29
RED/BLACK	39	39	GREEN/WHITE	51	51	GREY/BLACK	63	63
RED/GREEN	6	6	GREEN/RED	18	18	WHITE/RED	30	30
RED/BROWN	40	40	GREEN/BLUE	52	52	WHITE/BLUE	64	64
RED/BLUE	7	7	GREEN/YELLOW	19	19	WHITE/YELLOW	31	31
ORANGE/RED	41	41	GREEN/BLACK	53	53	WHITE/BLACK	65	65
ORANGE	8	8	BLUE	20	20	BLACK	32	32
ORANGE/WHITE	42	42	BLUE/WHITE	54	54	BLACK/WHITE	66	66
ORANGE/YELLOW	9	9	BLUE/YELLOW	21	21	BLACK/RED	33	33
ORANGE/BLACK	43	43	BLUE/BLACK	55	55	BLACK/BLUE	67	67
ORANGE/GREEN	10	10	BLUE/GREEN	22	22	BLACK/GREEN	34	34
ORANGE/BROWN	44	44	BLUE/BROWN	56	56	BLACK/BROWN	68	68
ORANGE/BLUE	11	11	PURPLE	23	23	SHIELD		SHIELD
BLUE/RED	45	45	PURPLE/WHITE	57	57			
YELLOW	12	12	PURPLE/RED	24	24			
YELLOW/WHITE	46	46	PURPLE/BLUE	58	58			

No.	DESCRIPTION		Q'TY	Supplier
7	COPPER FOIL 7.5*35mm	A6LA01-0309	1	M309
	U2CN68 PIN METAL HOOD	A1JD02-0083	1set	M83
6	PE HOOD COLOR TRANSPARENT	A5BA02-0280	1	M304
	COPPER FOIL 33*130mm	A6LA11-0309	1	M309
	MOLDED PE COLOR TRANSPARENT	A5BA02-0280		M280
	MOLDED PVC BLACK	H1BF01-0304K09		M304
5	UL20276 34 TWISTED PAIRS 30AWG,ALUM-MYLAR FOIL AND COPPER BRAID SHIELDING WITH BRAIN WIRE, OD 9.8mm, JACKET BLACK	A2DK02-0032K09	Lmm	M32
4	SCREW 5*44.84mm, #2-56	A1JD02-0083	2	M83
3	MOLDED THUMBSCREW #2-56, LENGTH 41mm, BLACK	A6AA22-0095	2	M95
2	U2CN68 MALE, GOLD FLASH ON CONTACTS, BLACK INSULATOR, ASSEMBLY TYPE	A1JD02-0083	1set	M83
1	HPDB68 MALE, GOLD FLASH ON CONTACTS, BLACK INSULATOR (0.62)	A1GF07-0083	1	M83

APPROVED		Ever Red Technology Co., Ltd.	Cable Length Unless Other Spec. Tolerances: 0 ~200mm ±10mm; 201~1000mm ±20mm; 1001 ~1500mm ±25mm; 1501~2100mm ±30mm; 2100mm↑ ±40mm
CHECKED	HU		
DRAWING	ZHU		
DATE	16/SEP/16	ITEM NO. 3245	UNIT:mm

REV.1 2016.09.01	MODIFY CABLE COLOR ,SCREW AND PLUG	CHECKED	