REVISIONS				
ZONE	REV	DESCRIPTION	DATE	APPROVED

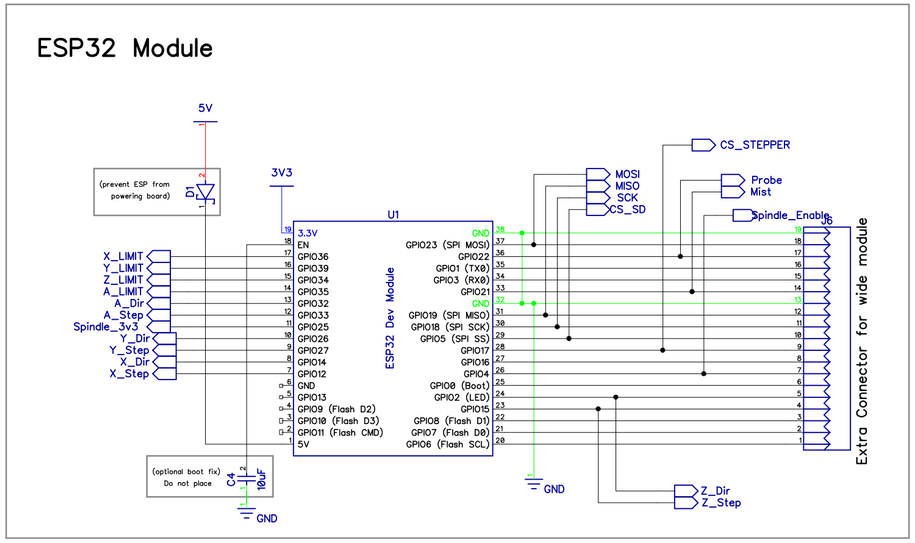

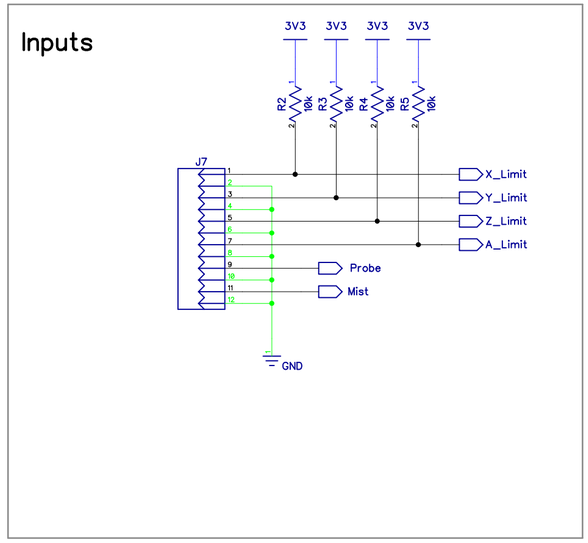

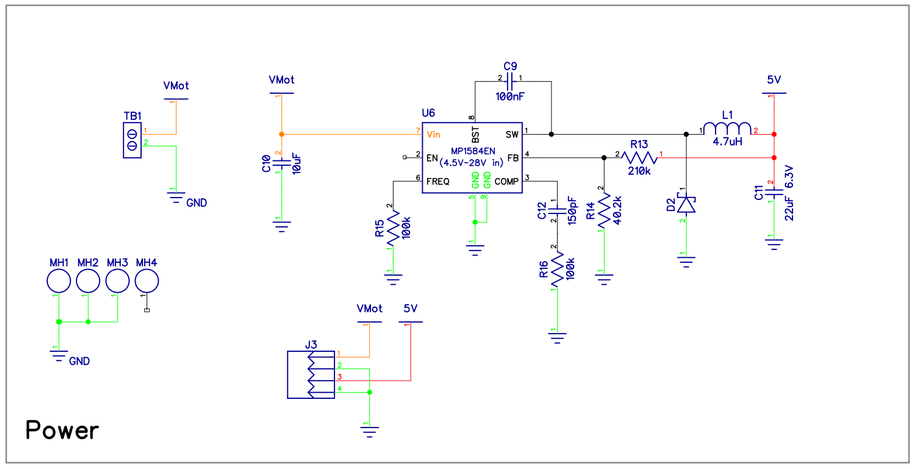

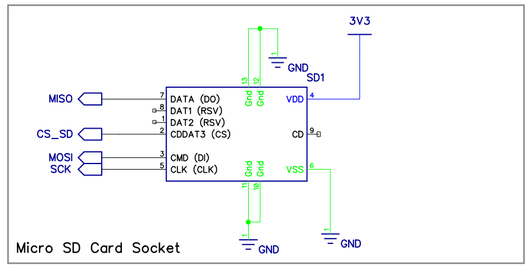

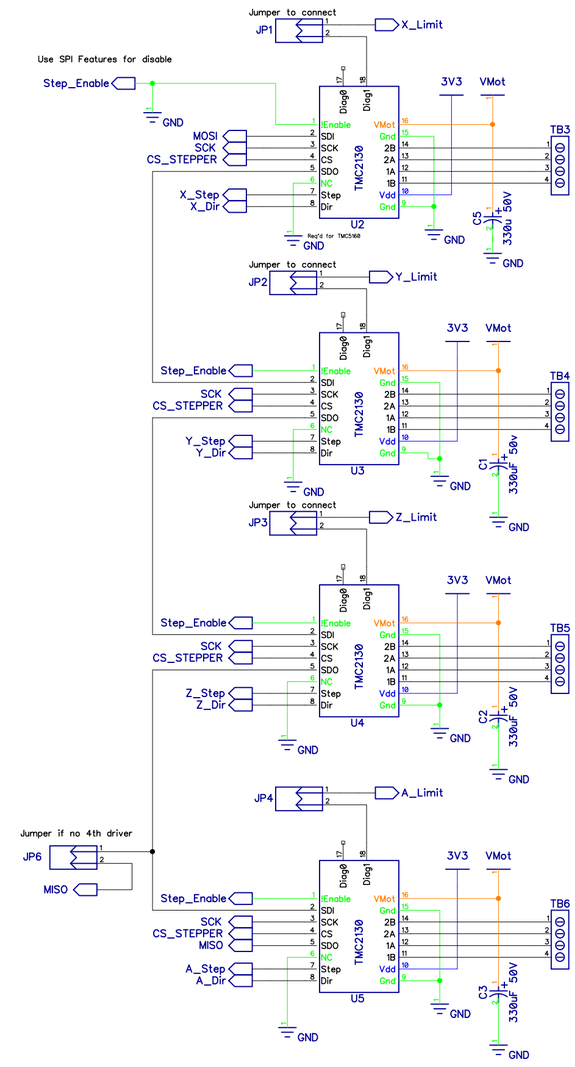

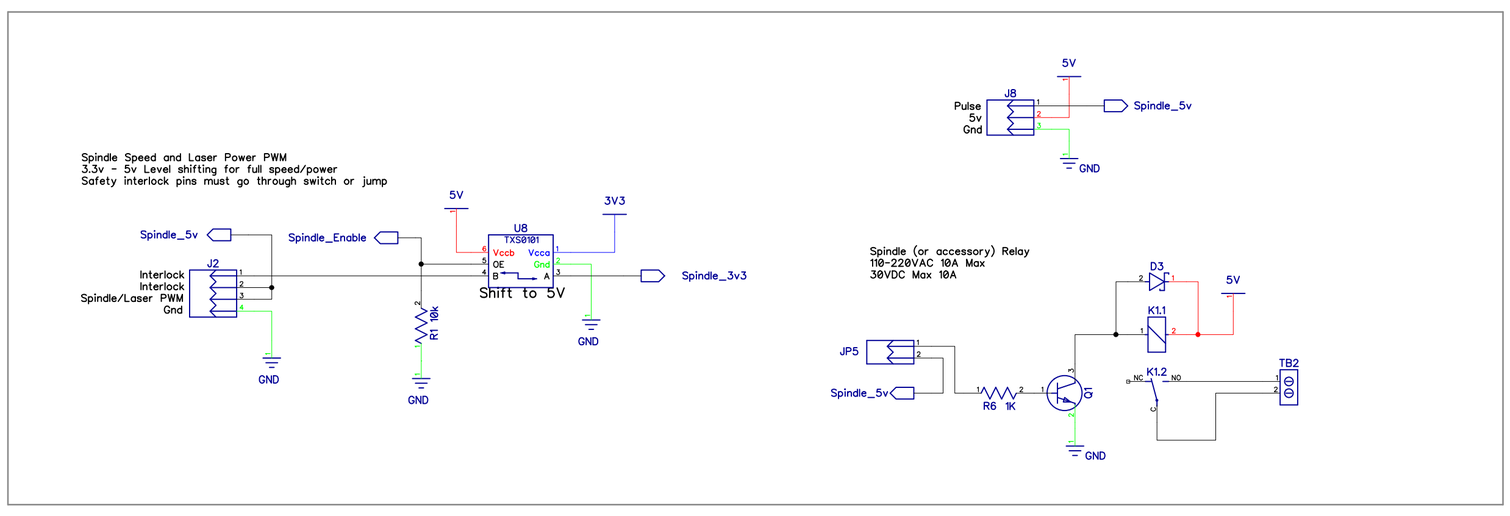

	ESP32 SPI 4 Axis V1P2			
	ESP32 SPI 4 Axis V1P2			
Buildlog.net	SIZE	FSCM NO.	DWG NO.	REV 1.2
	SCALE		Sheet 1	