REVISIONS				
ZONE	REV	DESCRIPTION	DATE	APPROVED

ESP32 Module

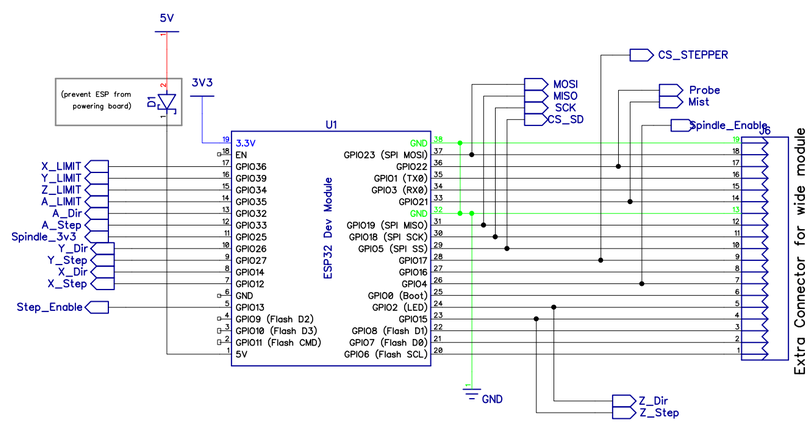

Inputs

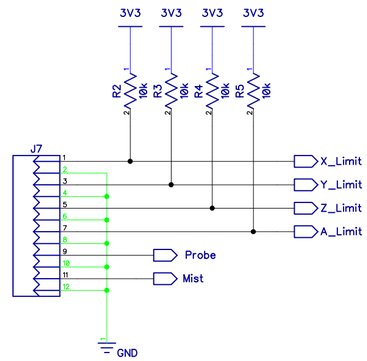

Power

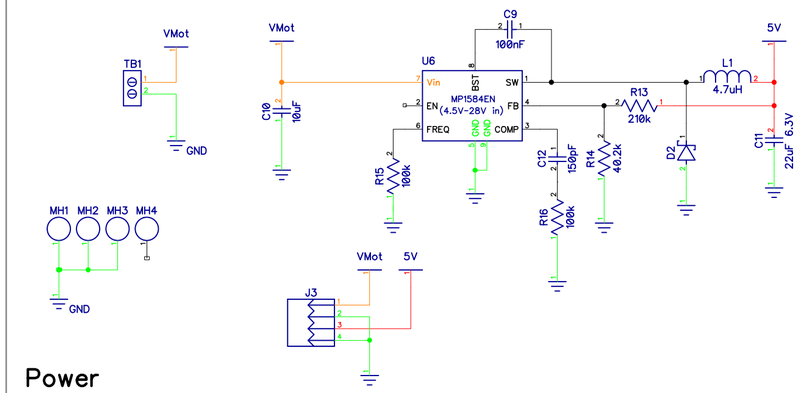

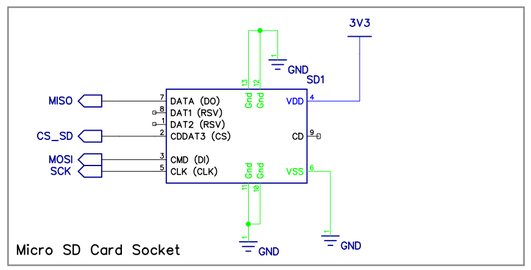

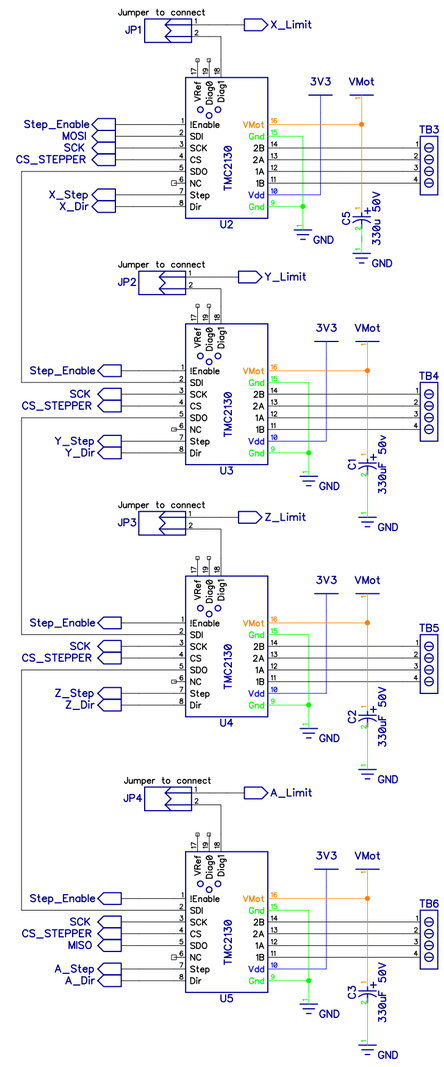

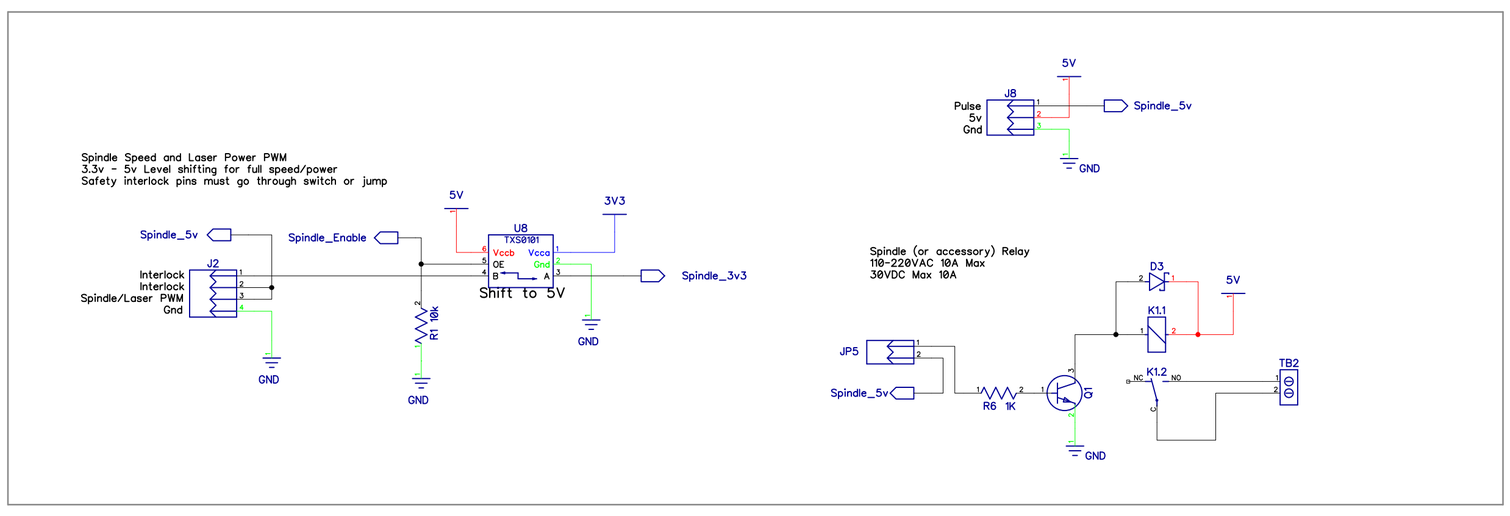

ESP32 Pen / Laser Controller

ESP32 Pen / Laser Controller

Buildlog.net	SIZE	FSCM NO.	DWG NO.	REV 2.0
	SCALE		Sheet 1	