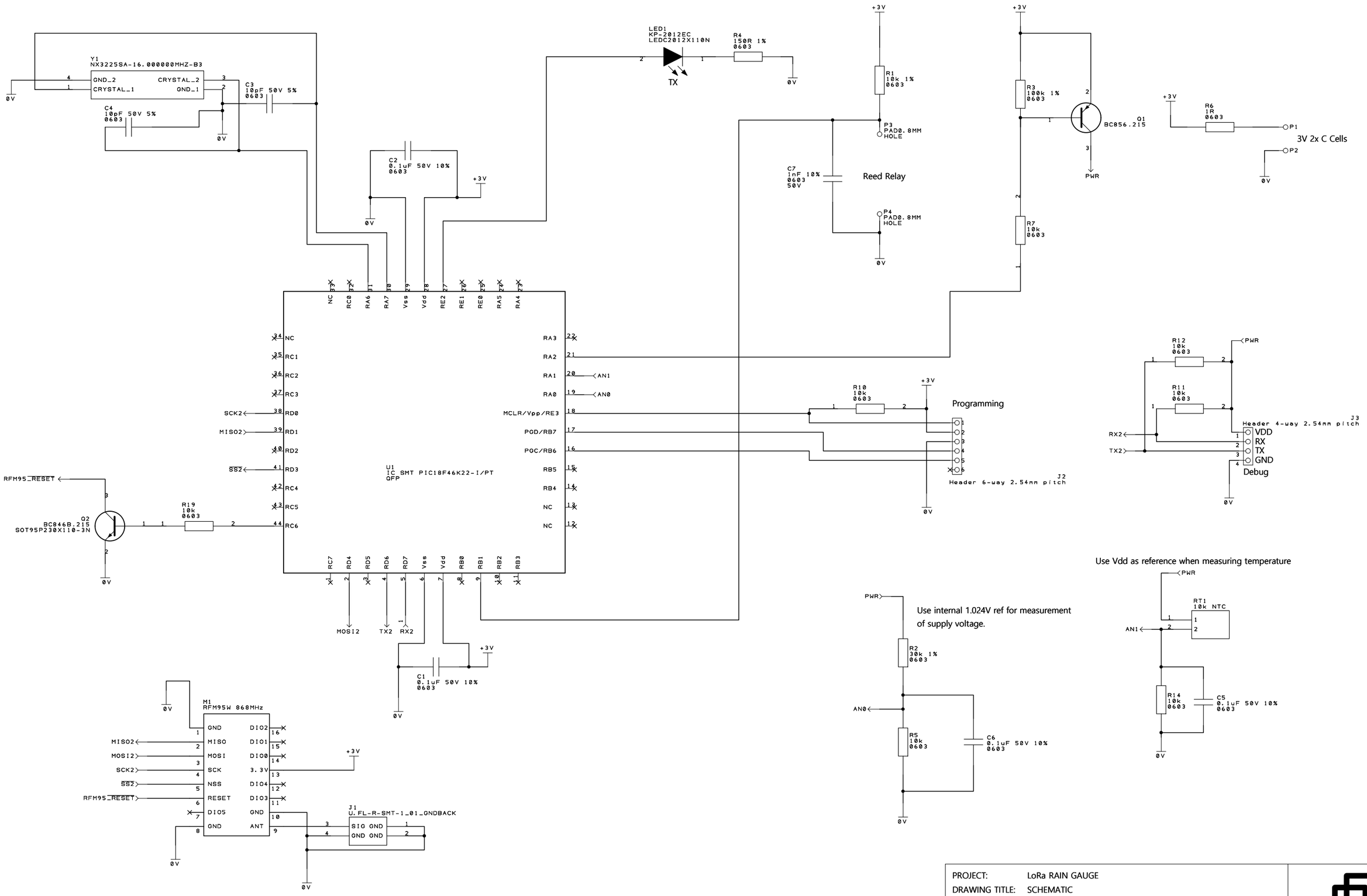

PROJECT:	LoRa RAIN GAUGE
DRAWING TITLE:	SCHEMATIC
DRAWN BY:	ANDY PAGE
REVISION:	1
SHEET: 1 OF 1	STATUS: FIRST RELEASE
DATE: 9TH MAY 2021	DESIGNSPARK PCB available for FREE at www.DesignSpark.com/PCB