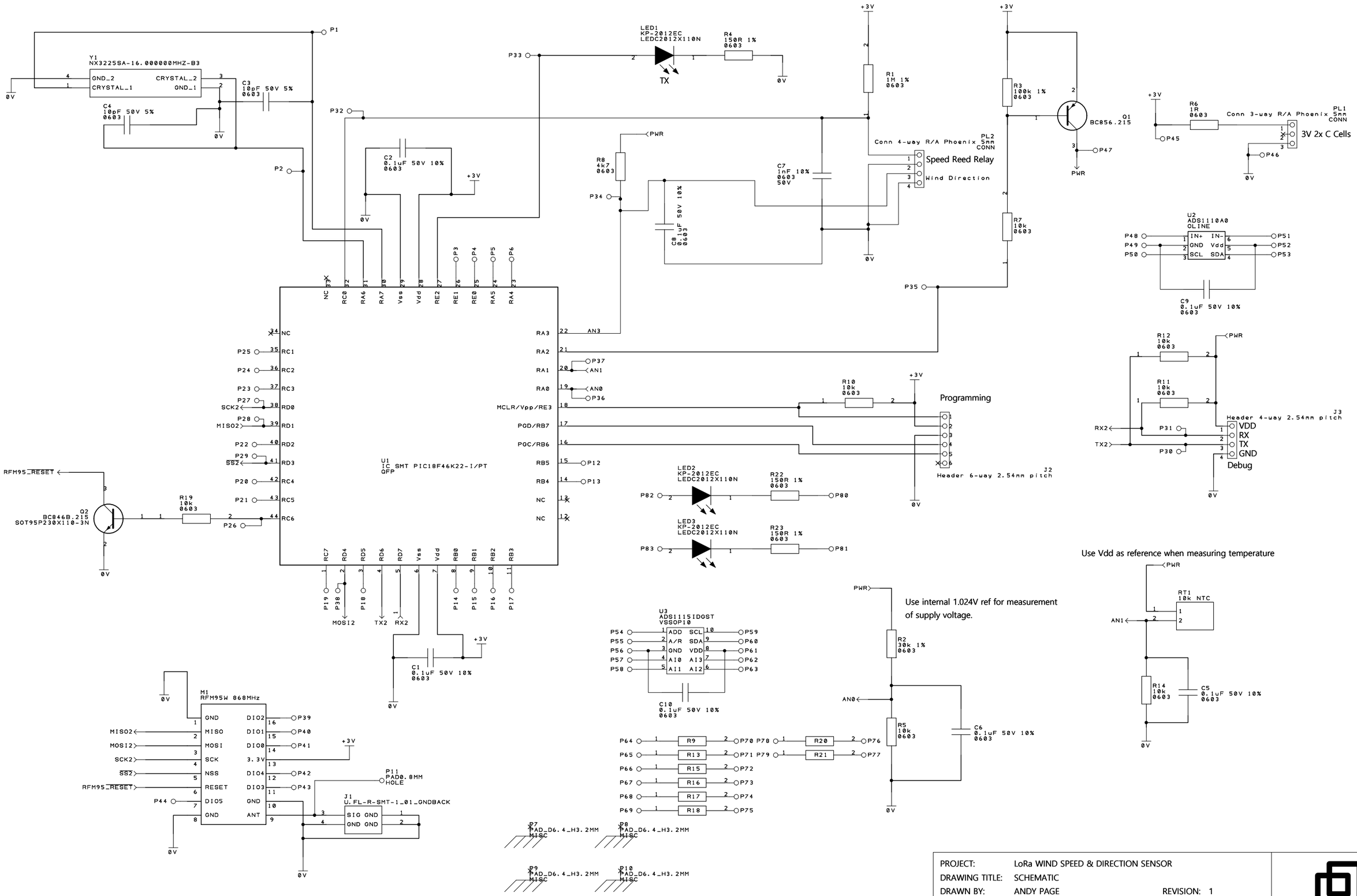

PROJECT:	LoRa WIND SPEED & DIRECTION SENSOR
DRAWING TITLE:	SCHEMATIC
DRAWN BY:	ANDY PAGE
REVISION:	1
SHEET:	1 OF 1
STATUS:	FIRST RELEASE
DATE:	28TH JAN 2022

DESIGNSPARK PCB available for FREE at www.DesignSpark.com/PCB