Block Diagram

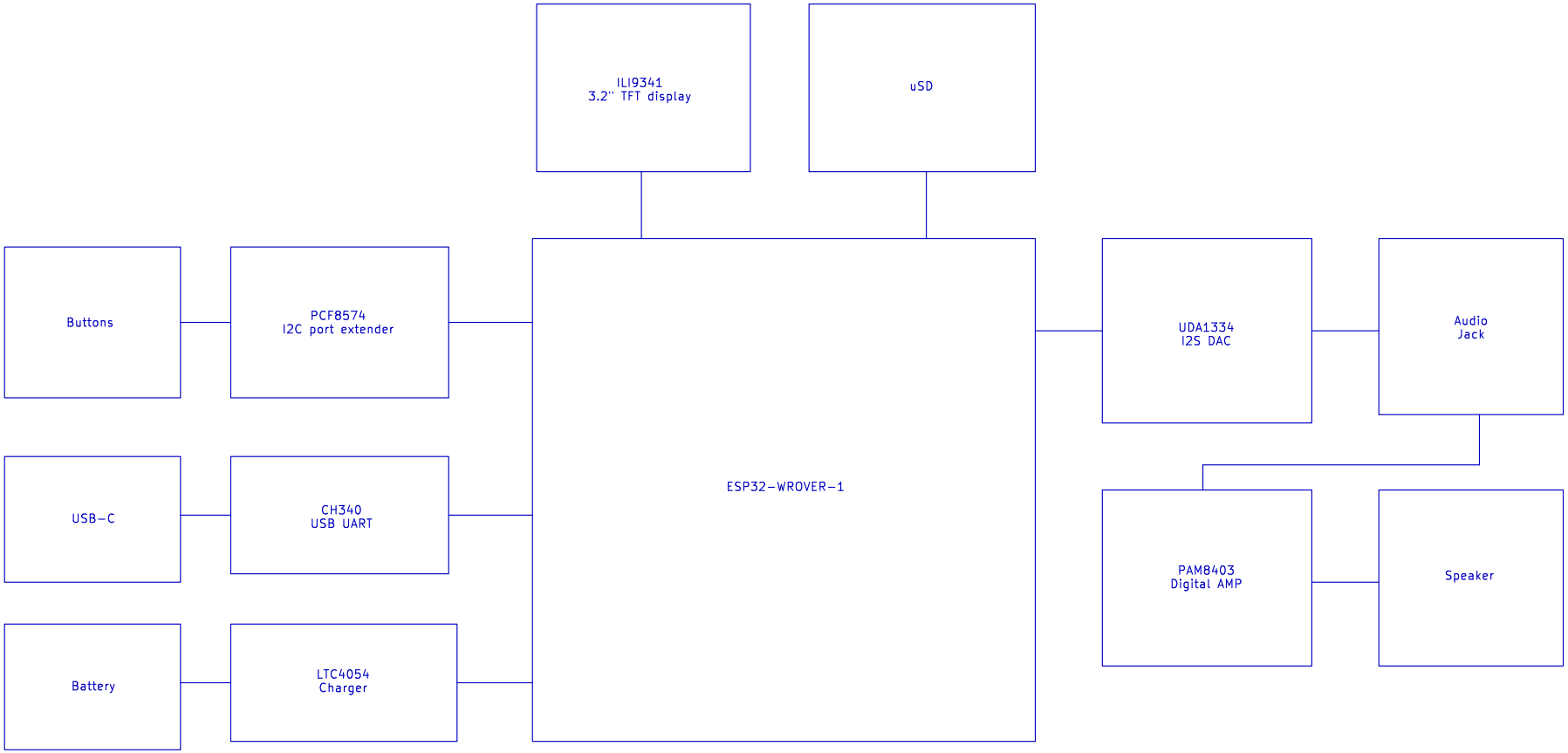

MCU

File: mcu.kicad_sch

audio

File: audio.kicad_sch

Andy Karpov production

Sheet: /

File: esplay.kicad_sch

Title: Karabas Esplay

Size: A4	Date: 2025-09-28	**Rev: A**
KiCad E.D.A. 9.0.4		Id: 1/3

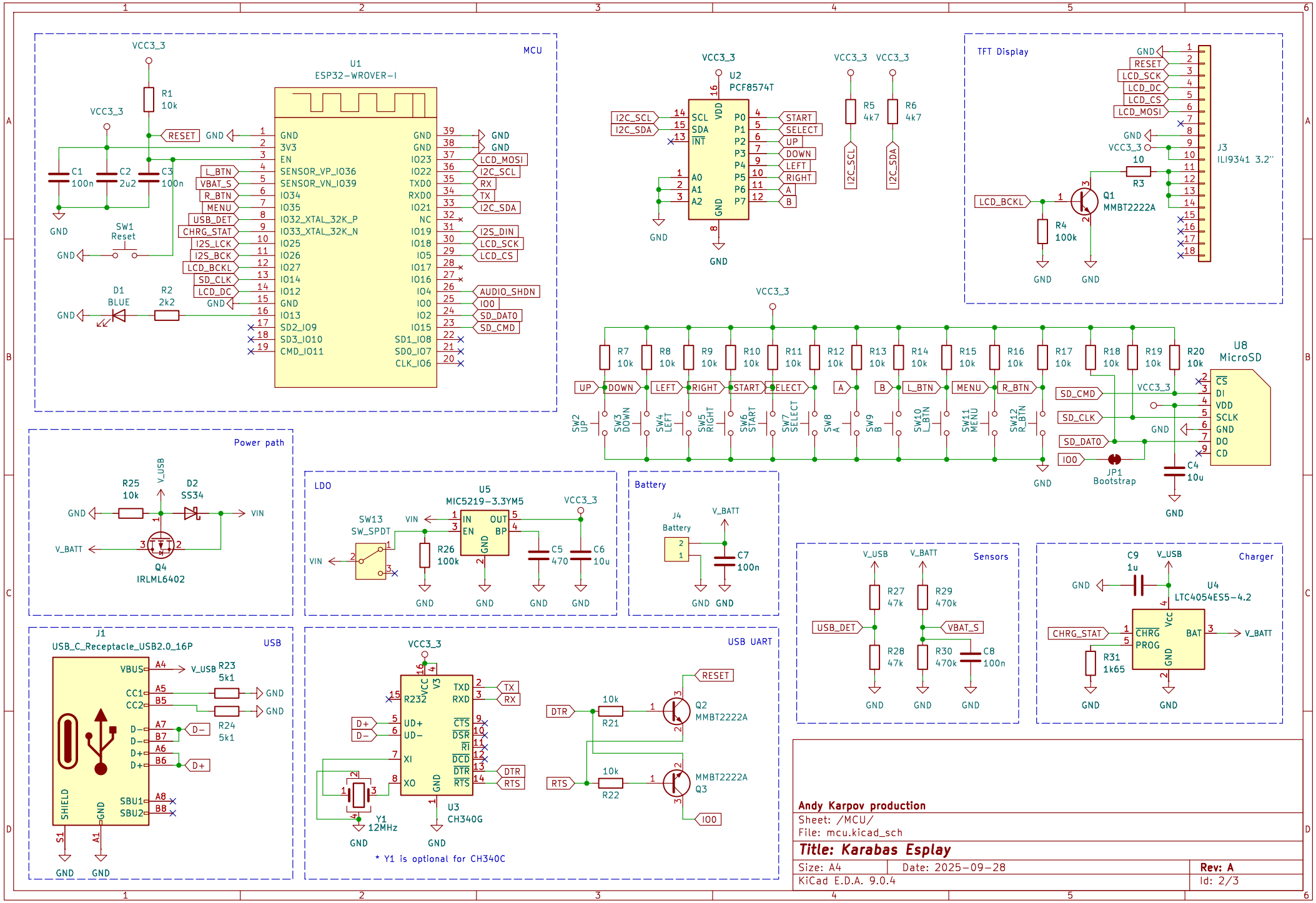
MCU
U1
ESP32-WROVER-I
VCC3_3
R1
10k
RESET
GND
C1
100n
C2
2u2
C3
100n
SW1
Reset
D1
BLUE
R2
2k2
L_BTN
VBAT_S
R_BTN
MENU
USB_DET
CHRG_STAT
I2S_LCK
I2S_BCK
LCD_BCKL
SD_CLK
LCD_DC
LCD_MOSI
I2C_SCL
RX
TX
I2C_SDA
I2S_DIN
LCD_SCK
LCD_CS
AUDIO_SHDN
IO0
SD_DAT0
SD_CMD
U2
PCF8574T
START
SELECT
UP
DOWN
LEFT
RIGHT
A
B
R5
4k7
R6
4k7
TFT Display
J3
ILI9341 3.2"
R3
10
Q1
MMBT2222A
R4
100k
R7
10k
R8
10k
R9
10k
R10
10k
R11
10k
R12
10k
R13
10k
R14
10k
R15
10k
R16
10k
R17
10k
R18
10k
R19
10k
R20
10k
SW2 UP
SW3 DOWN
SW4 LEFT
SW5 RIGHT
SW6 START
SW7 SELECT
SW8 A
SW9 B
SW10 L_BTN
SW11 MENU
SW12 R_BTN
U8
MicroSD
CS
DI
VDD
SCLK
GND
DO
CD
JP1
Bootstrap
C4
10u
Power path
R25
10k
V_USB
D2
SS34
VIN
V_BATT
Q4
IRLML6402
LDO
U5
MIC5219-3.3YM5
SW13
SW_SPDT
R26
100k
C5
470
C6
10u
Battery
J4
Battery
C7
100n
Sensors
R27
47k
R28
47k
R29
470k
R30
470k
C8
100n
Charger
C9
1u
U4
LTC4054ES5-4.2
CHRG_STAT
R31
1k65
J1
USB_C_Receptacle_USB2.0_16P
USB
VBUS
CC1
CC2
D-
D+
SHIELD
R23
5k1
R24
5k1
USB UART
U3
CH340G
Y1
12MHz
R21
10k
R22
10k
Q2
MMBT2222A
Q3
MMBT2222A
DTR
RTS
* Y1 is optional for CH340C
Andy Karpov production
Sheet: /MCU/
File: mcu.kicad_sch
Title: Karabas Esplay
Size: A4
Date: 2025-09-28
Rev: A
KiCad E.D.A. 9.0.4
Id: 2/3

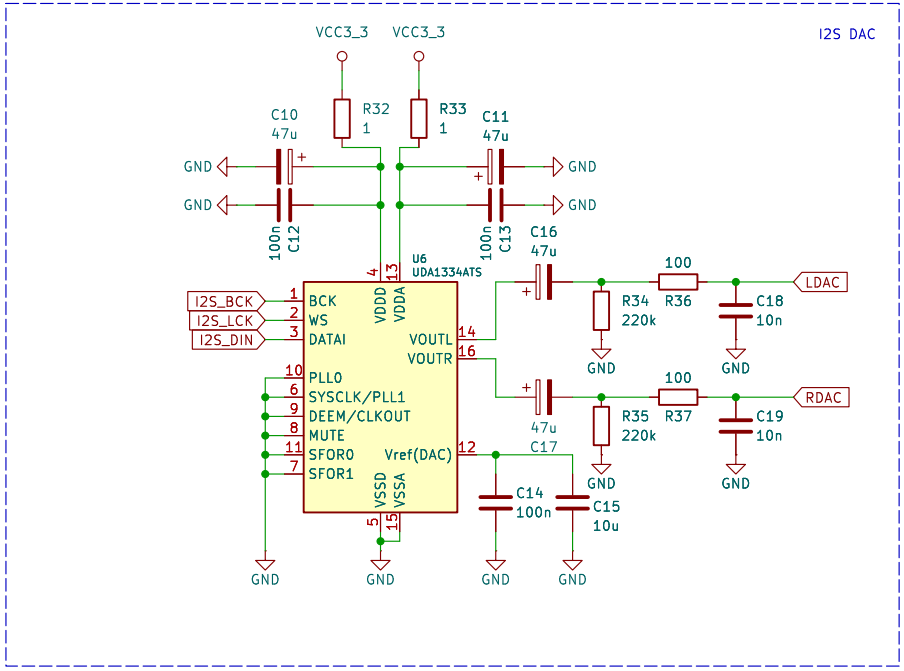

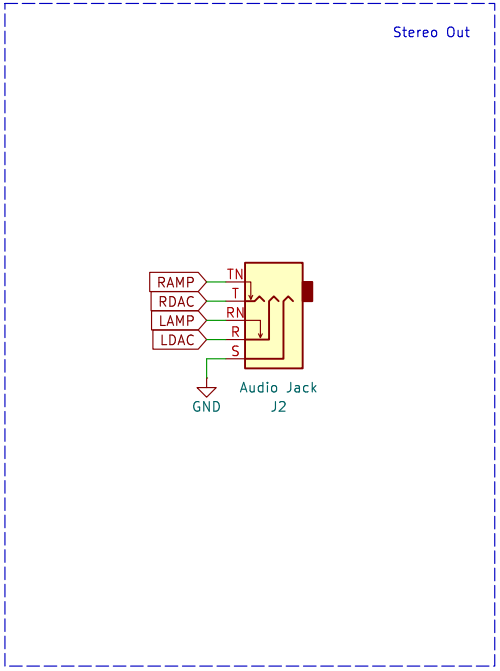

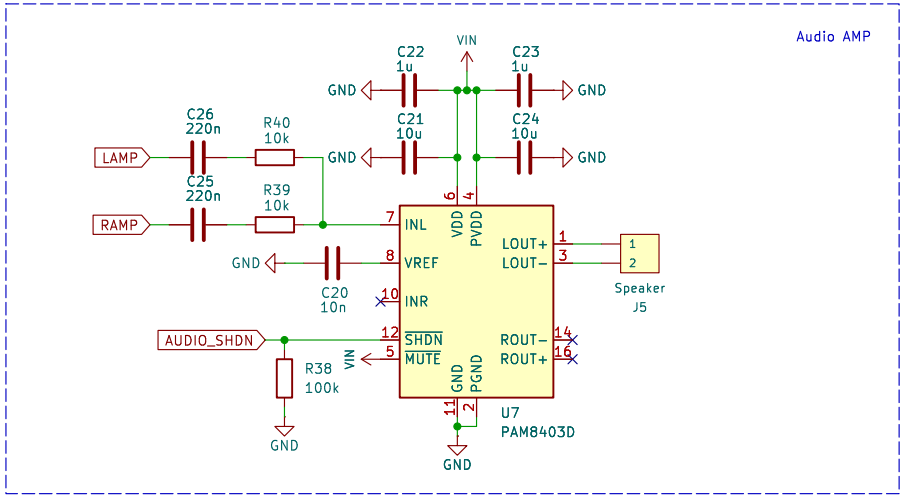

Andy Karpov production

Sheet: /audio/
File: audio.kicad_sch

Title: Karabas Esplay

Size: A4	Date: 2025-09-28	**Rev: A**
KiCad E.D.A. 9.0.4		Id: 3/3