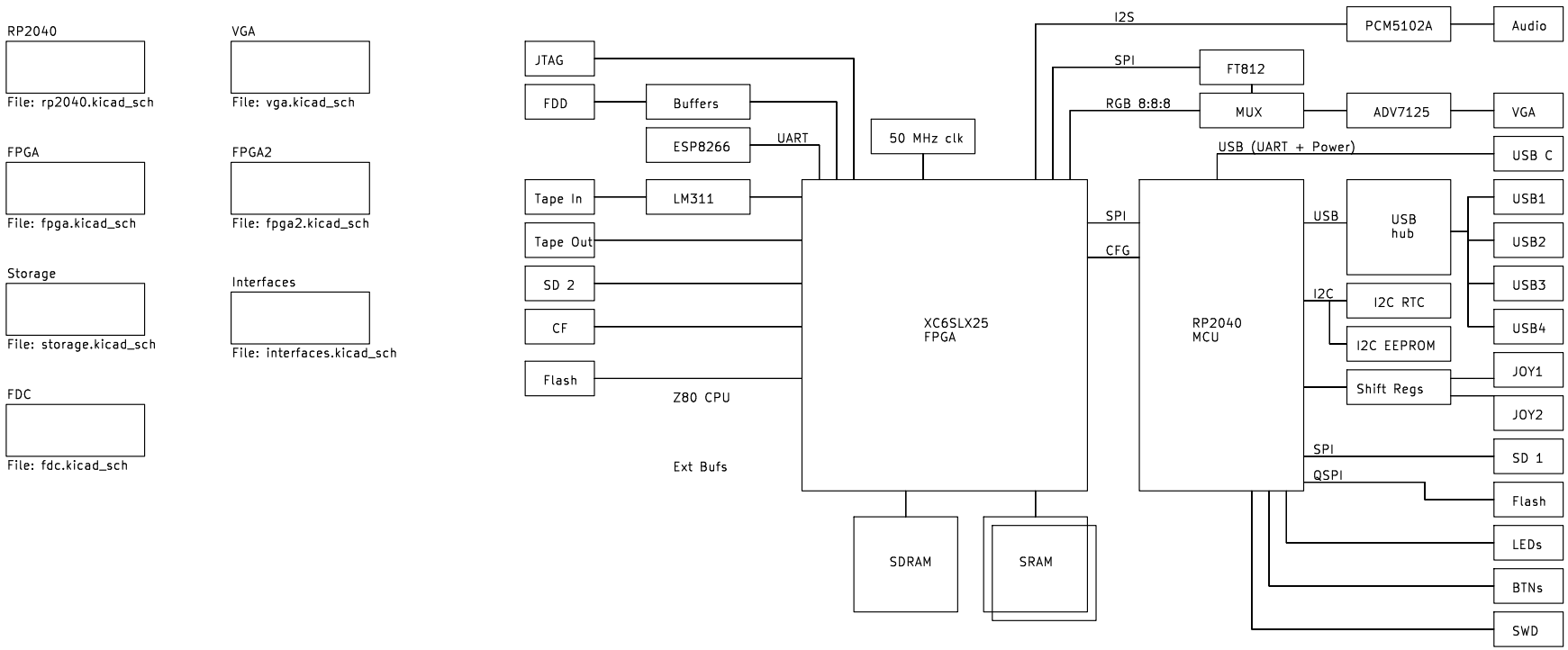

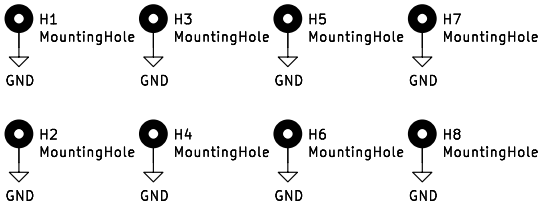

Sheet: /
File: karabas-go.kicad_sch

Title: Karabas-Go

Size: A4	Date: 2023-12-30	**Rev: B**
KiCad E.D.A. kicad 7.0.10-7.0.10~ubuntu22.04.1		Id: 1/8

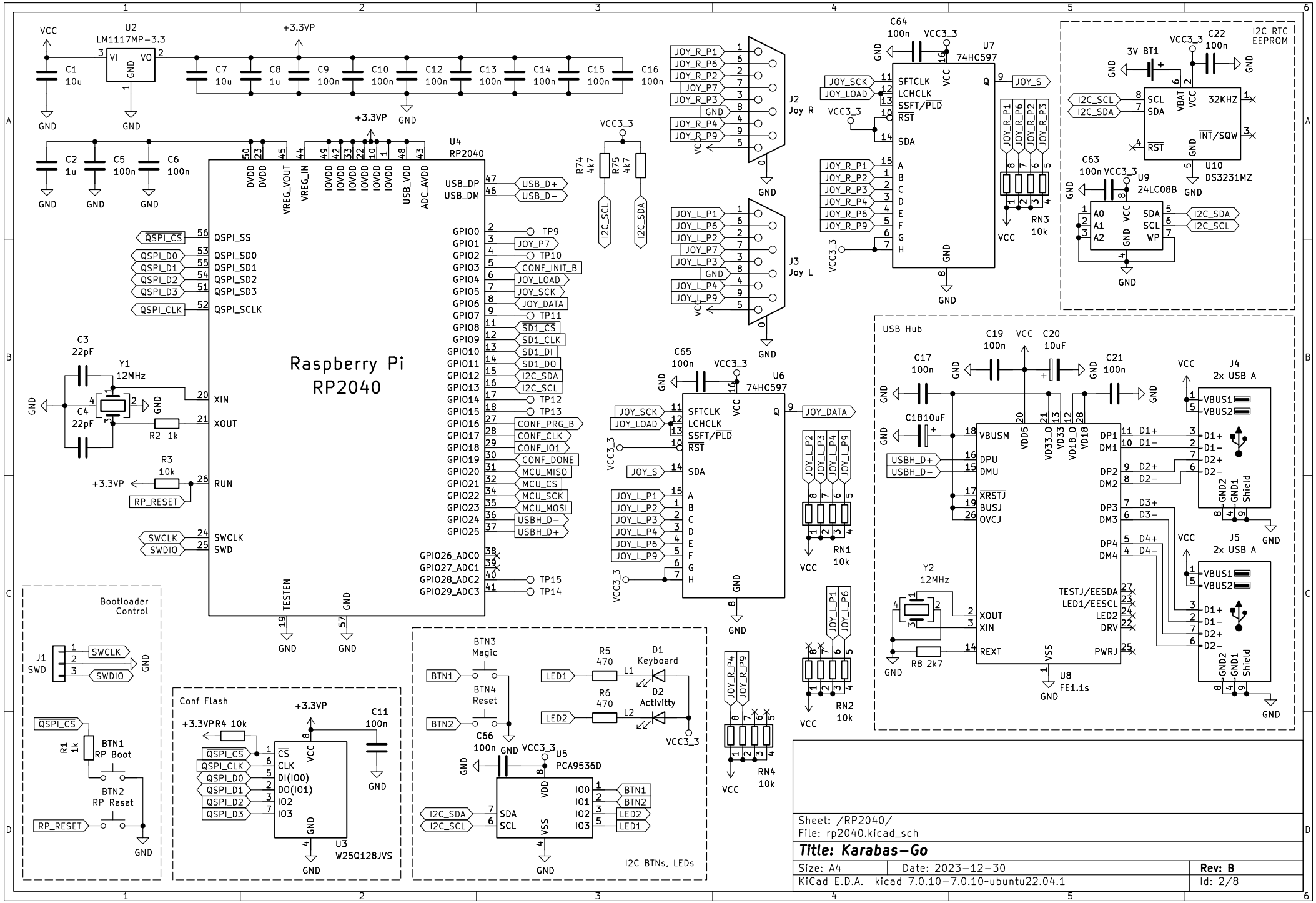

Sheet: /RP2040/
File: rp2040.kicad_sch

Title: Karabas-Go

Size: A4	Date: 2023-12-30	Rev: B
KiCad E.D.A. kicad 7.0.10-7.0.10~ubuntu22.04.1		Id: 2/8

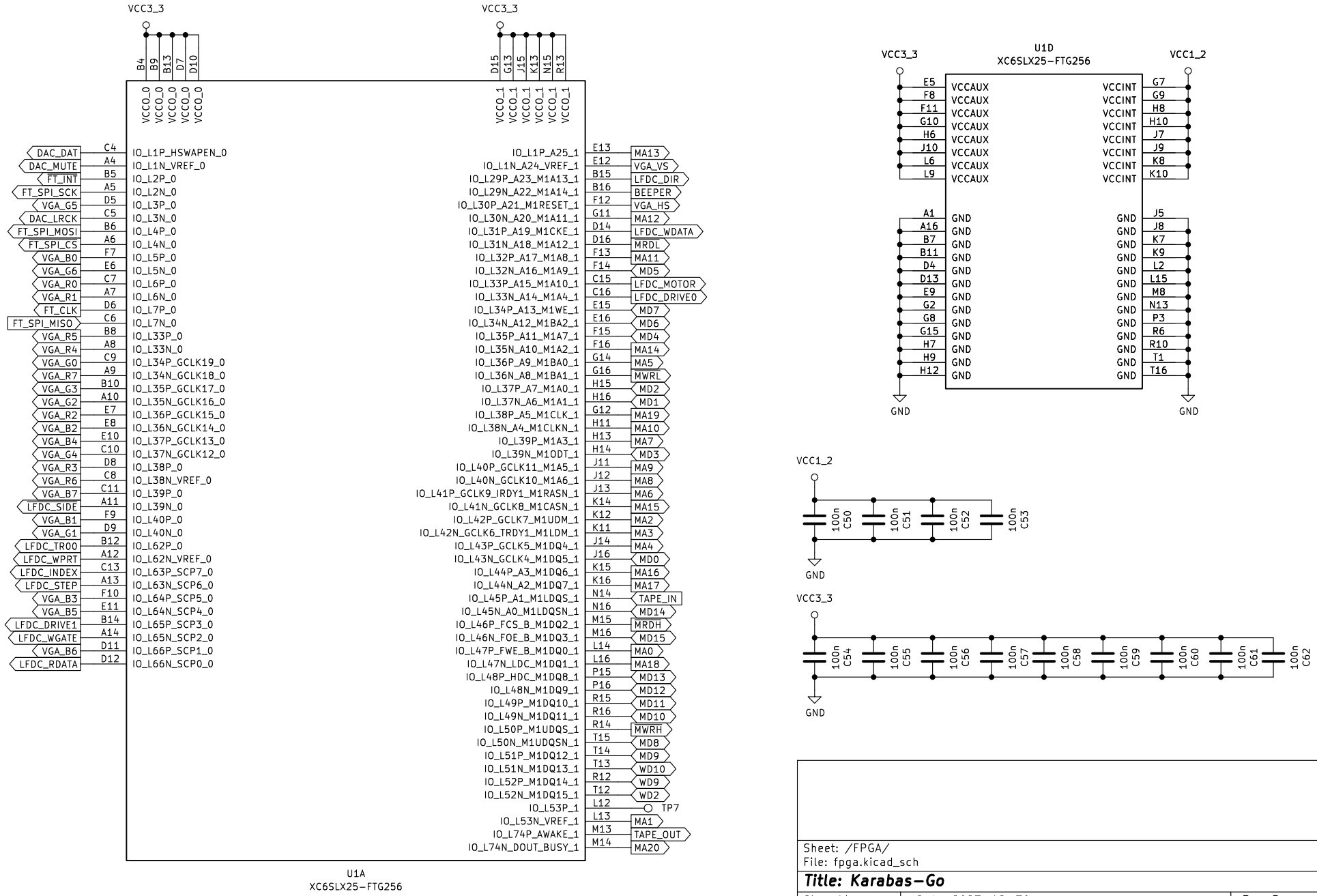

Sheet: /FPGA/
File: fpga.kicad_sch

Title: Karabas-Go

Size: A4	Date: 2023-12-30	Rev: B
KiCad E.D.A. kicad 7.0.10-7.0.10~ubuntu22.04.1		Id: 3/8

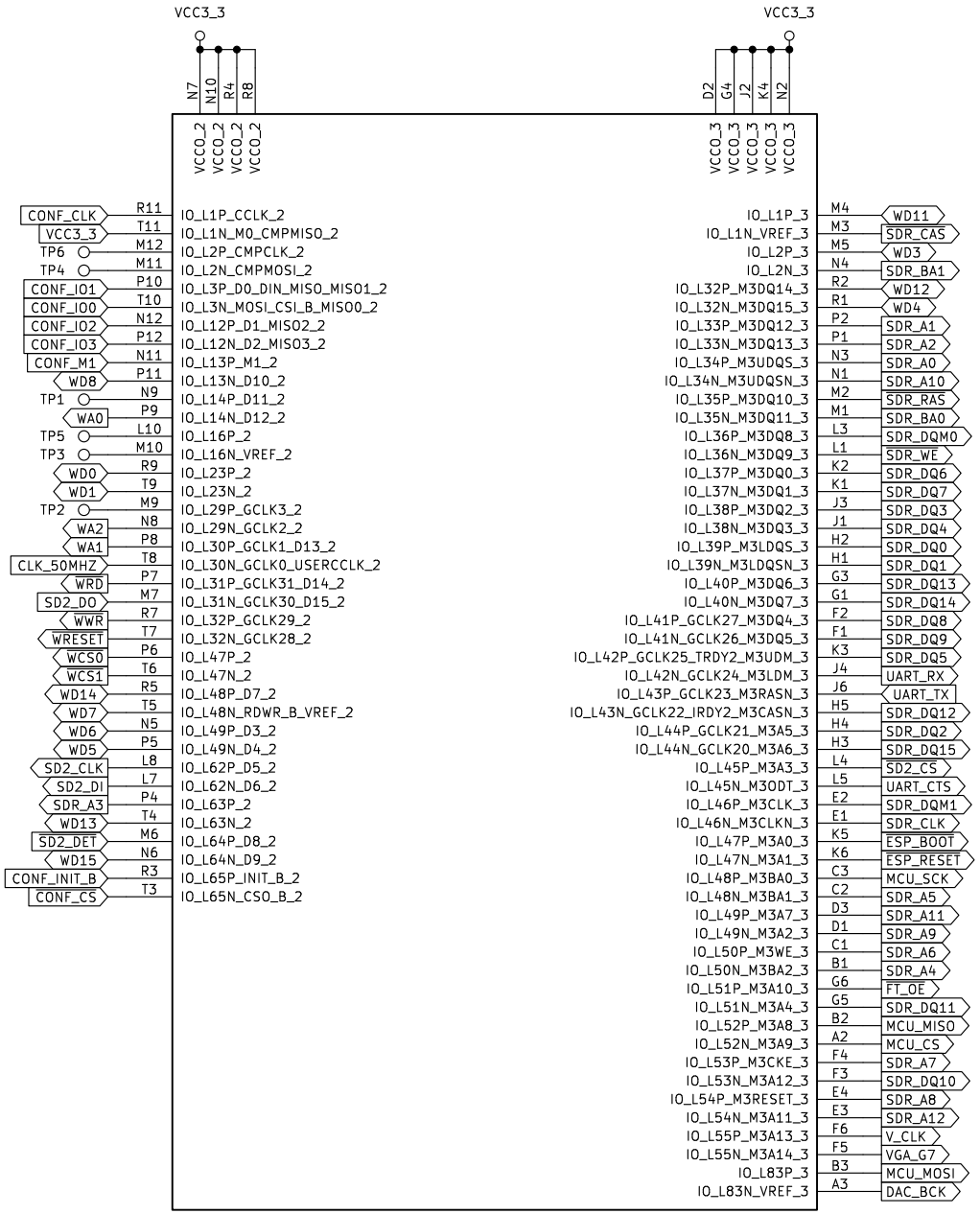

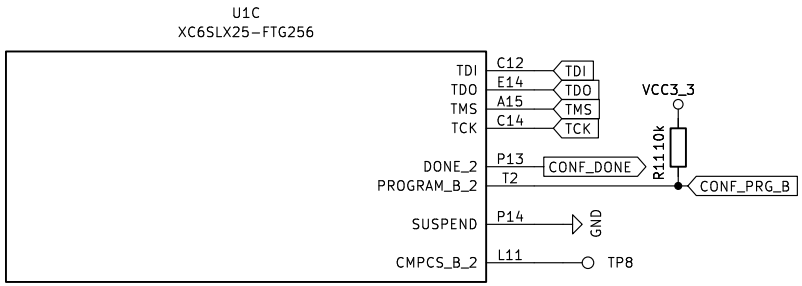

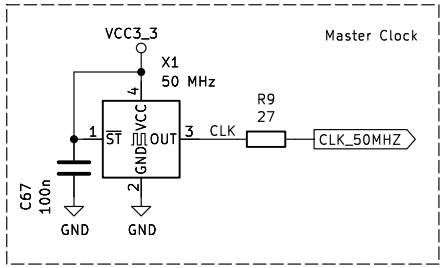

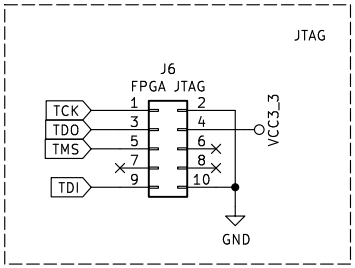

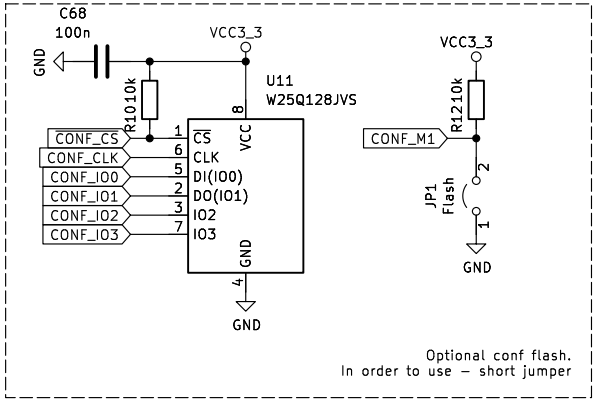

Sheet: /FPGA2/
File: fpga2.kicad_sch

Title: Karabas-Go

Size: A4	Date: 2023-12-30	**Rev: B**
KiCad E.D.A. kicad 7.0.10-7.0.10~ubuntu22.04.1		Id: 4/8

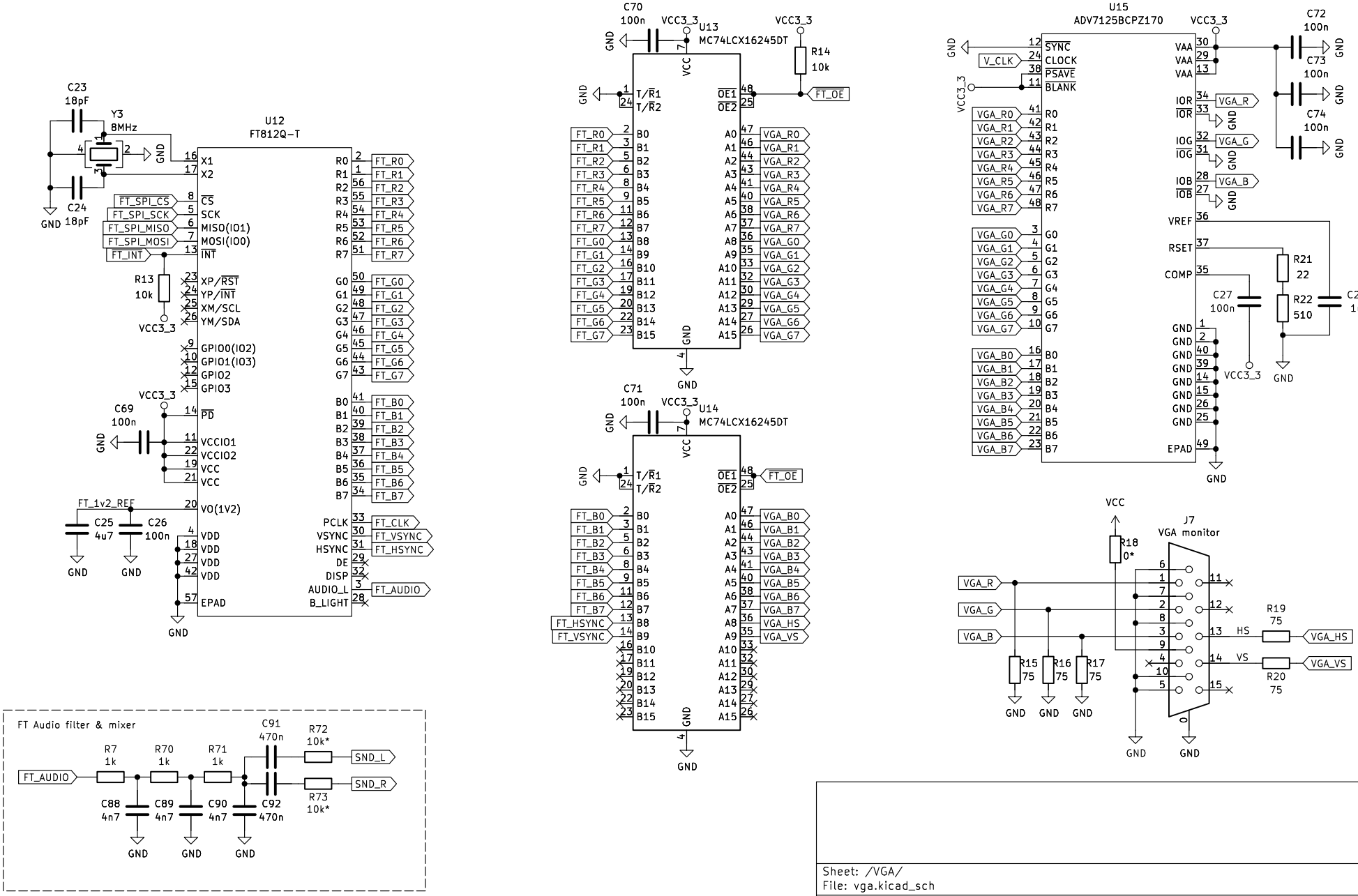

Sheet: /VGA/
File: vga.kicad_sch

Title: Karabas-Go

Size: A4	Date: 2023-12-30	Rev: B
KiCad E.D.A. kicad 7.0.10-7.0.10~ubuntu22.04.1		Id: 5/8

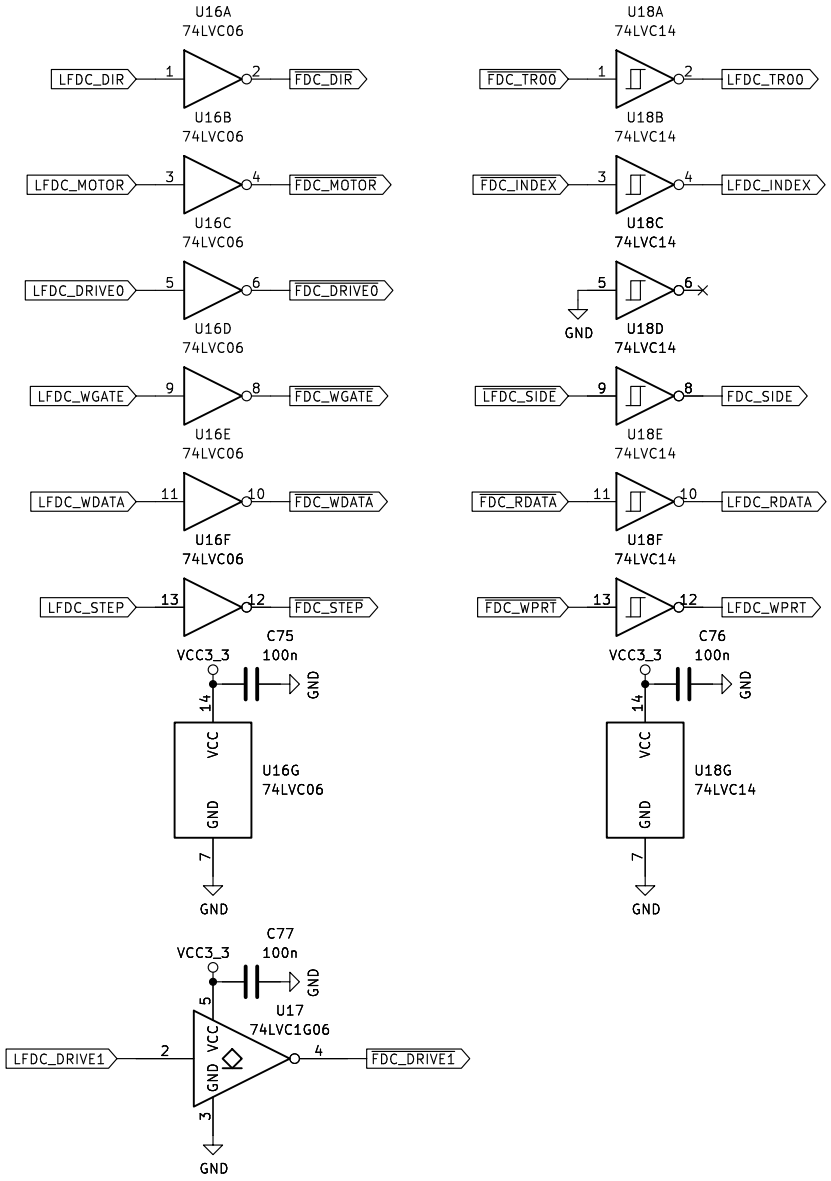

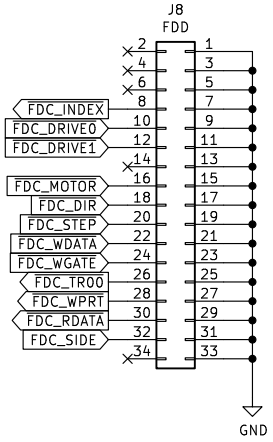

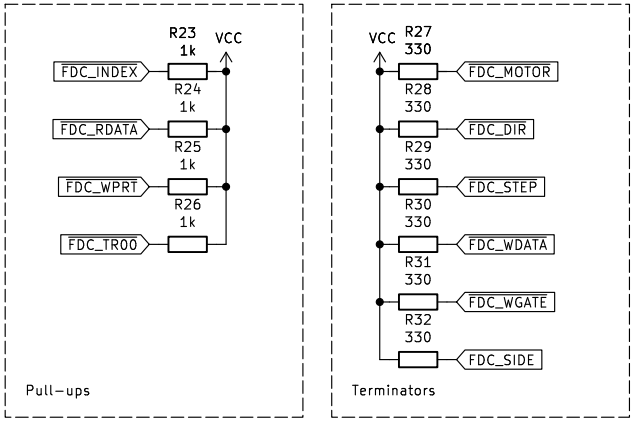

Sheet: /FDC/
File: fdc.kicad_sch

Title: Karabas-Go

Size: A4	Date: 2023-12-30	**Rev: B**
KiCad E.D.A. kicad 7.0.10-7.0.10~ubuntu22.04.1		Id: 6/8

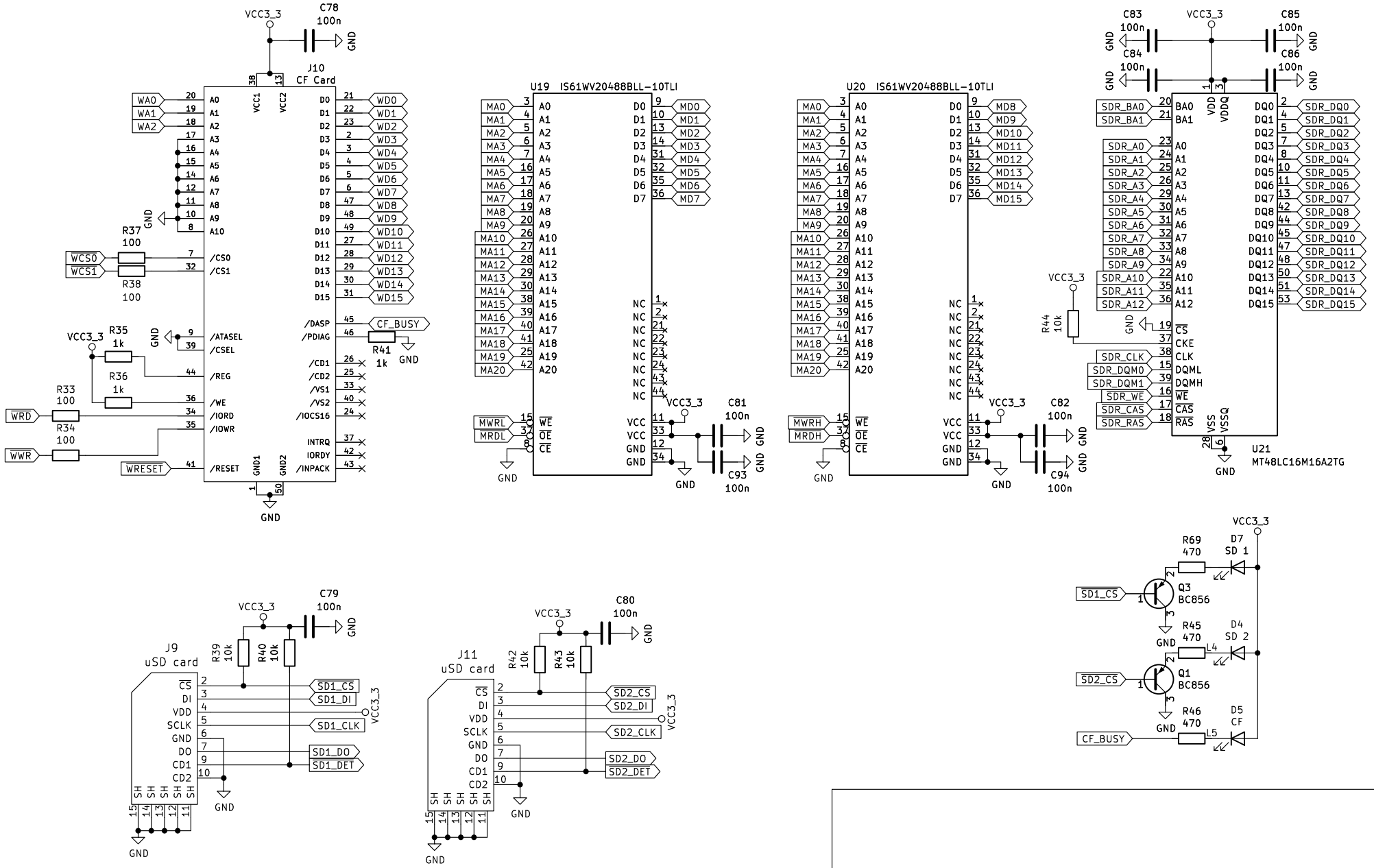

Sheet: /Storage/
File: storage.kicad_sch

Title: Karabas-Go

Size: A4	Date: 2023-12-30	Rev: B
KiCad E.D.A. kicad 7.0.10-7.0.10~ubuntu22.04.1		Id: 7/8

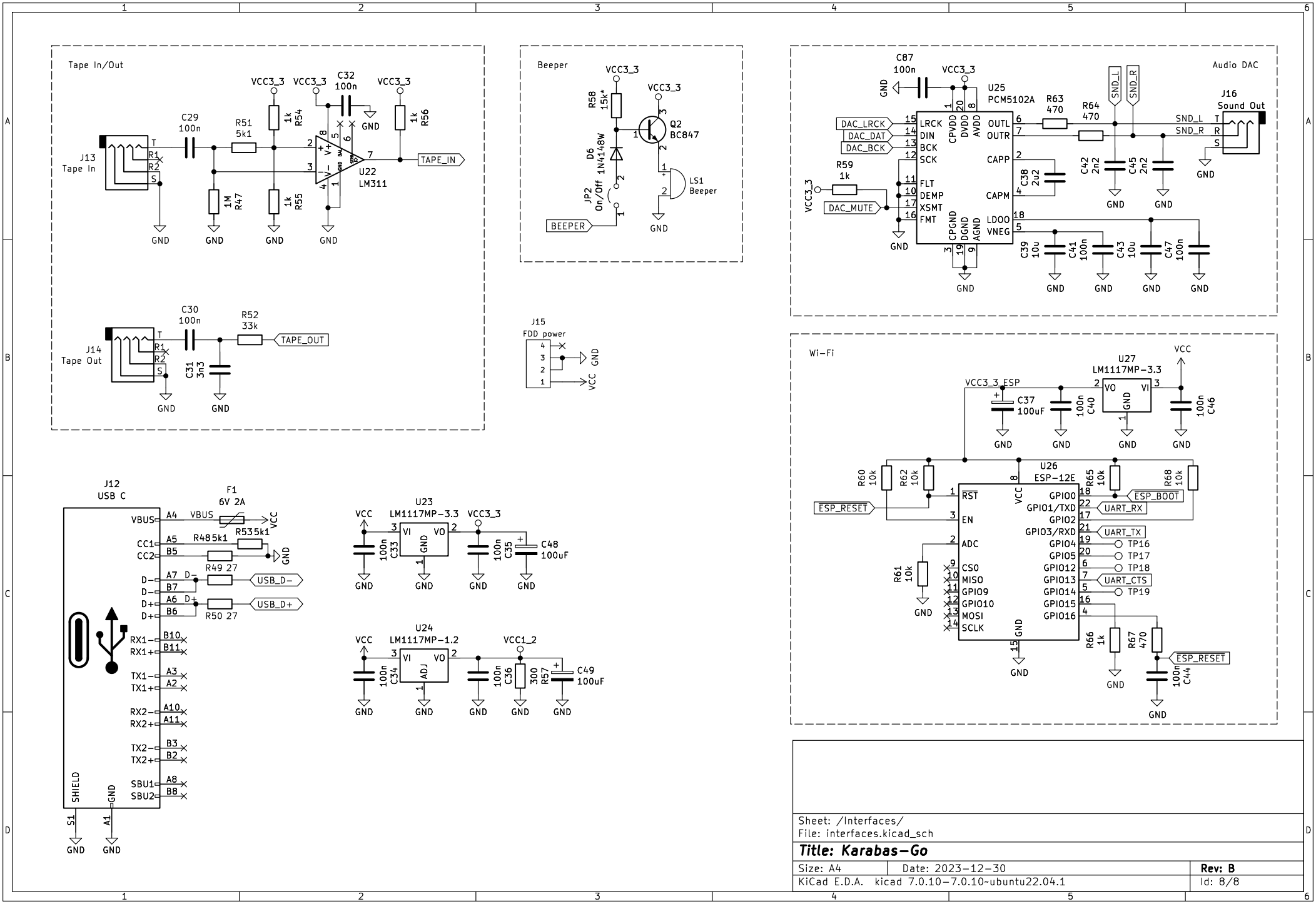

Sheet: /Interfaces/
File: interfaces.kicad_sch

Title: Karabas-Go

Size: A4	Date: 2023-12-30	Rev: B
KiCad E.D.A. kicad 7.0.10-7.0.10~ubuntu22.04.1		Id: 8/8