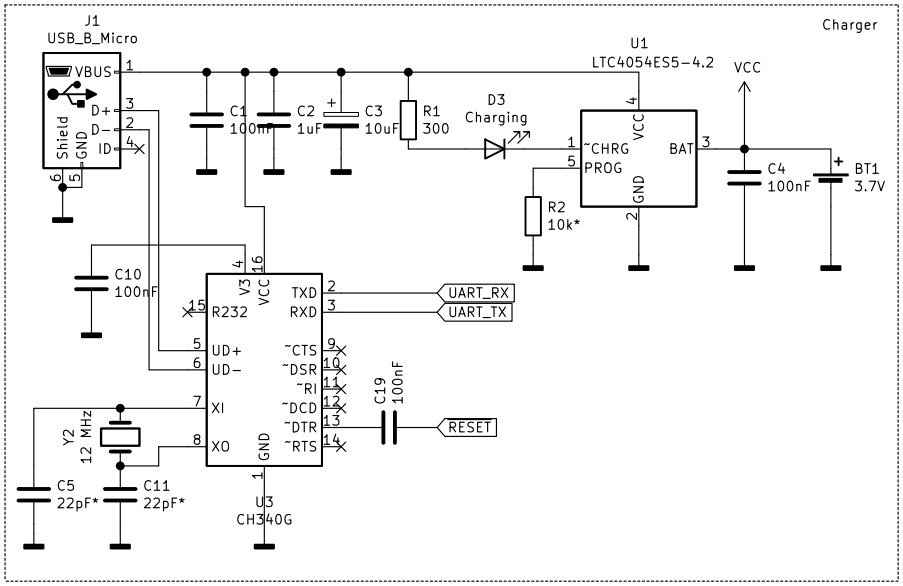

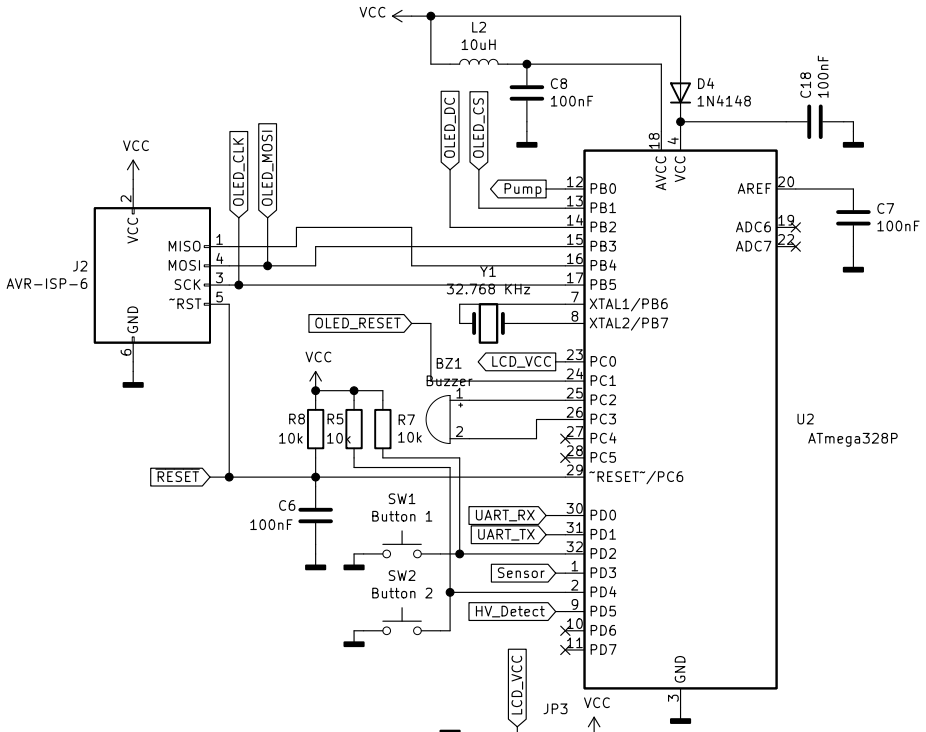

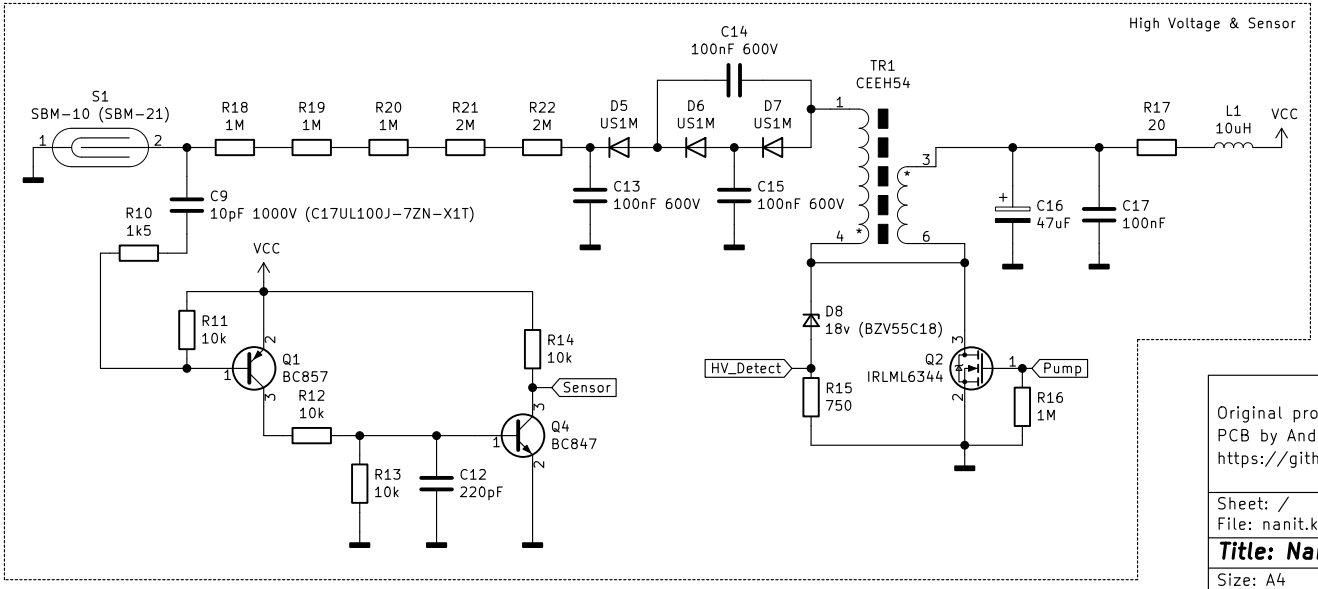

Original project by MadOrc
PCB by Andy Karpov
https://github.com/nanit

Sheet: /
File: nanit.kicad_sch

Title: Nanit

Size: A4	Date: 2021-07-26	Rev: C
KiCad E.D.A. kicad 5.99.0-unknown-d613292b67~131~ubuntu20.04.1		Id: 1/1