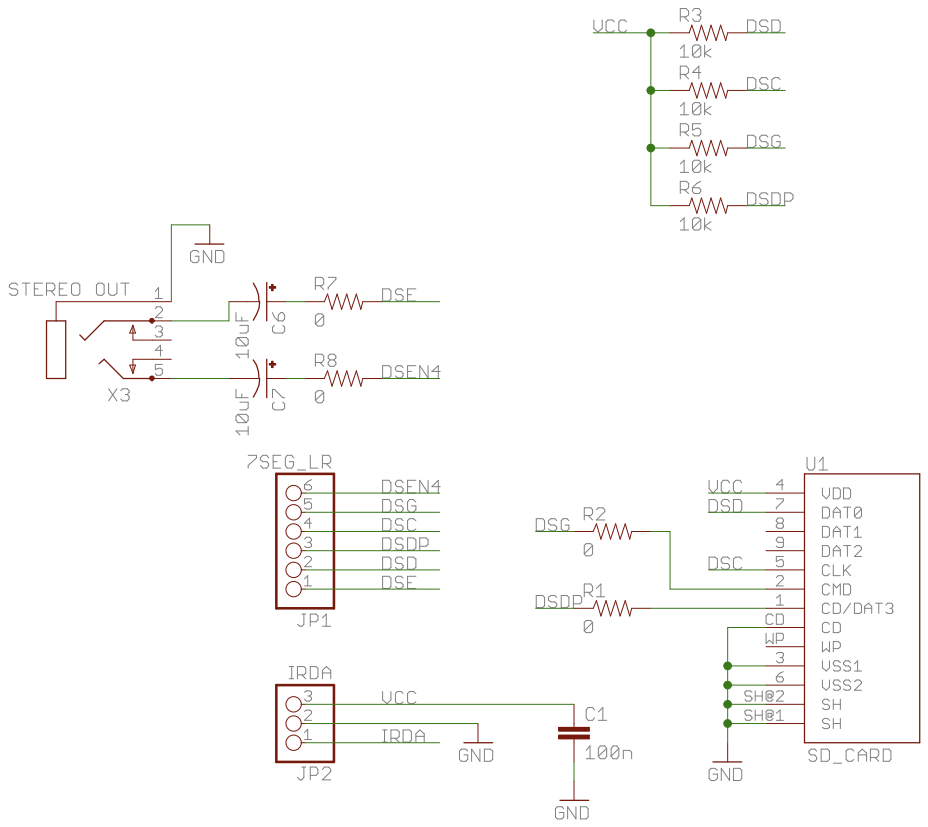

Released under the Creative Commons
Attribution Share-Alike 3.0 License
http://creativecommons.org/licenses/by-sa/3.0

TITLE: wxeda-sd-mod

Design by:
Andy Karpov <andy.karpov@gmail.com>

REV: SDONLY

Date: 14.09.14 23:11

Sheet: 1/1