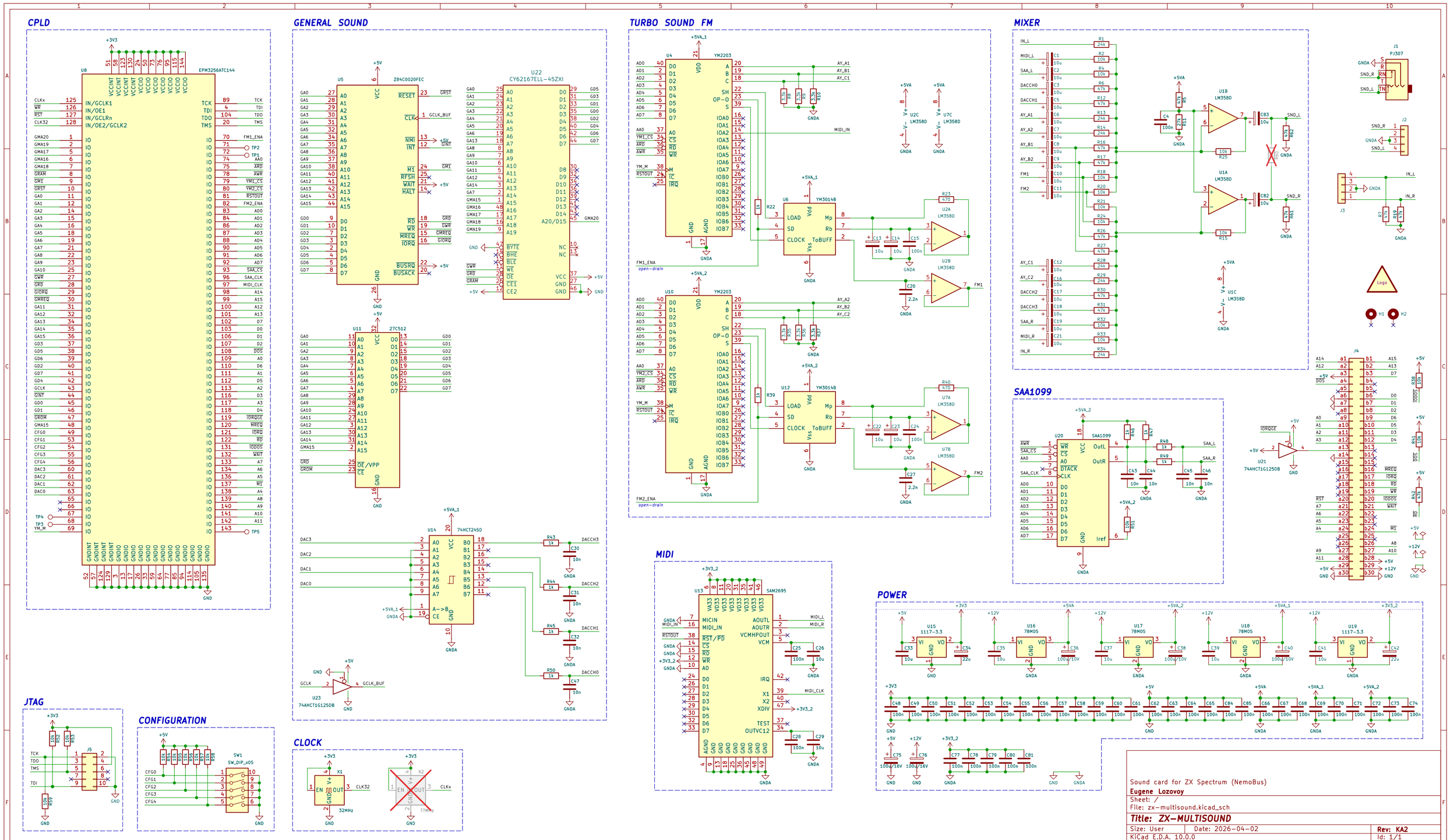

Sound card for ZX Spectrum (NemoBus)

Eugene Lozovoy

Sheet: /

File: zx-multisound.kicad_sch

Title: ZX-MULTISOUND

Size: User	Date: 2026-04-02	Rev: KA2
KiCad E.D.A. 10.0.0		Id: 1/1