Camera Sensor

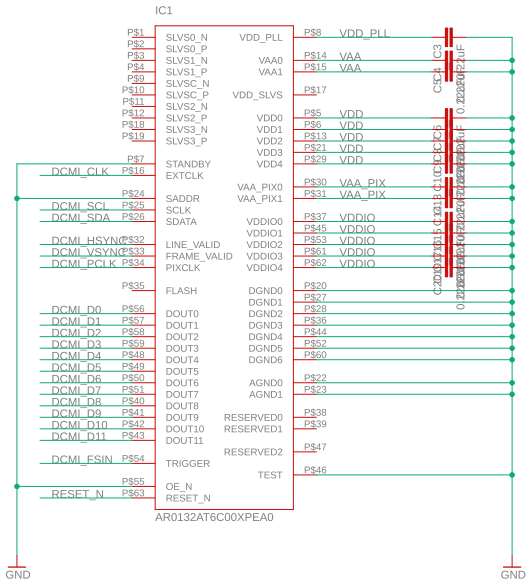

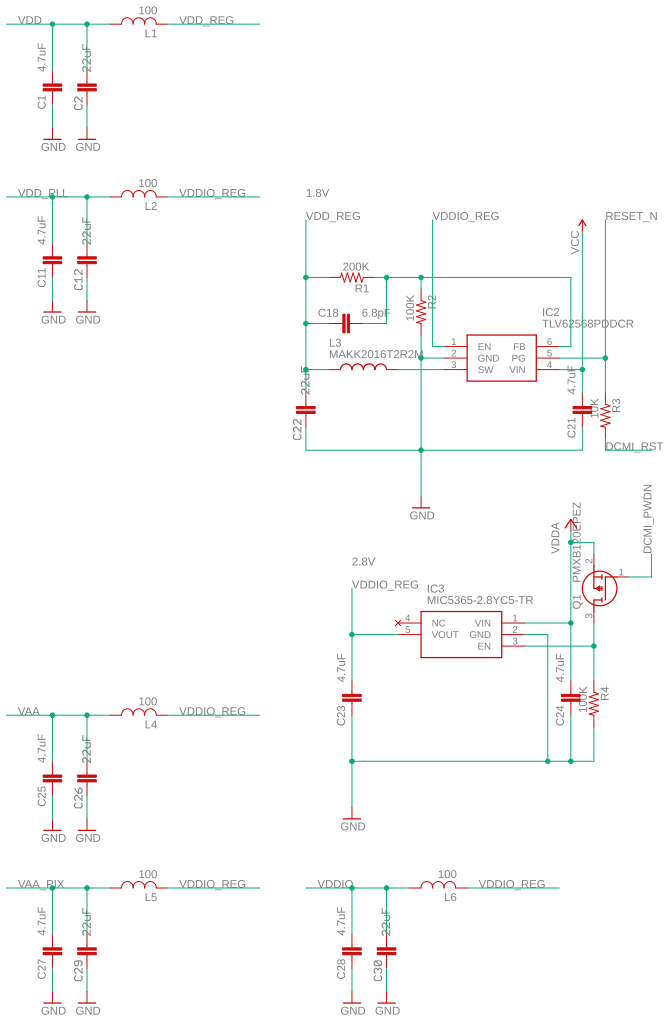

Connector

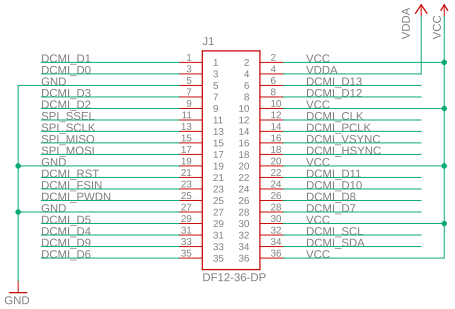

Mechanical

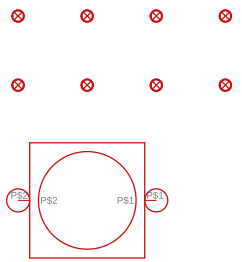

Copyright (c) 2013-2023 OpenMV <openmv@openmv.io>
This work is licensed under the Creative Commons Attribution-ShareAlike 3.0 License.
To view a copy of this license, visit http://creativecommons.org/licenses/by-sa/3.0/

TITLE: hd-hdr	
Document Number:	REV:
Date: 4/24/2023 4:18 PM	Sheet: 1/1