Expandable Controller

Changes:

We realized while creating the casing for the controller that there would not be enough room for all of the components that we initially planned to have in our controller. There was also the problem of the arduino being too big to fit in the controller and still wouldn't have enough inputs for all of our buttons. To solve this problem, we have decided to pivot away from the traditional controller with 2 joysticks, 4 triggers, a d-pad, 4 buttons, and 2 menu/start buttons. Instead, we are going to create a comfortable and more modernized snes type of controller by scrapping 2 of the triggers, 1 joystick, and the d-pad. We are continuing with the idea of an expandable controller but were unable to fit all of the components that we had originally hoped for. We had the thought of increasing the size of the controller, however this would defeat the purpose of having an expandable controller that fits everyone's hands.

Exploded View Animation:

Youtube Link: **https://youtu.be/zRmB2IQ1TKk**

Paper Prototype:

The prototype works by separating the controller into three pieces, the left handle, the right handle, and the centerpiece. The two handles will be connected via the centerpiece and will be connected using magnets. This allows for quick adjustability while still feeling secure. The top left image shows what the controller will look like at largest size, the bottom left shows smallest size, and the top right shows how the magnets work.

A-A (1:2)

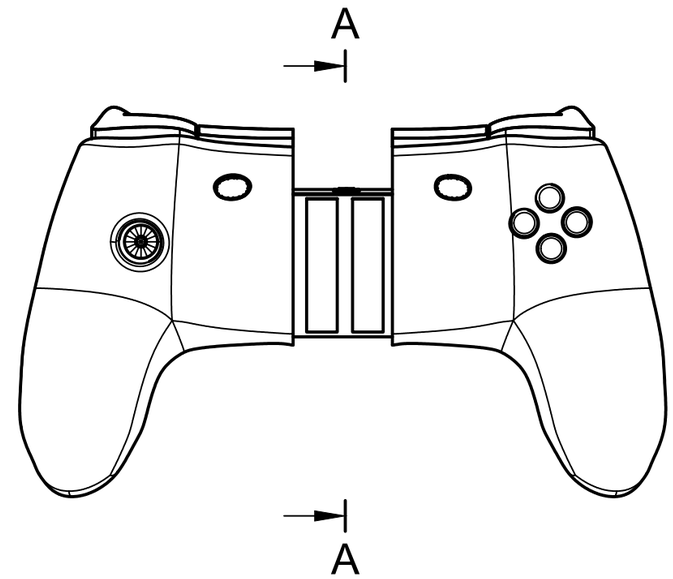

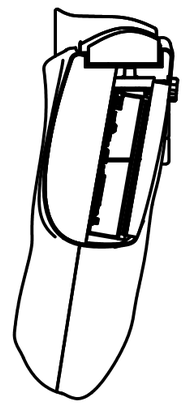

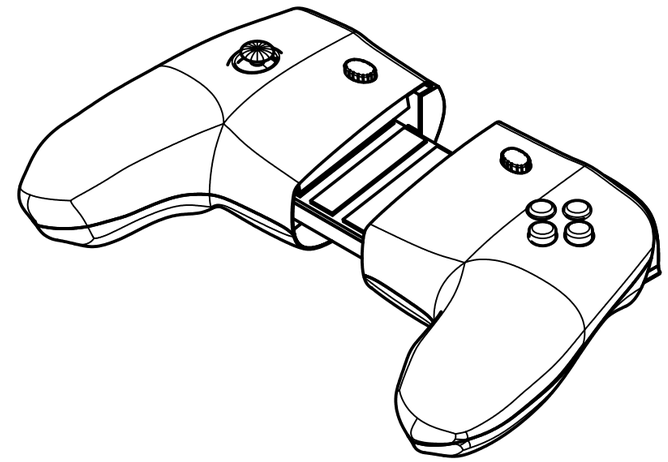

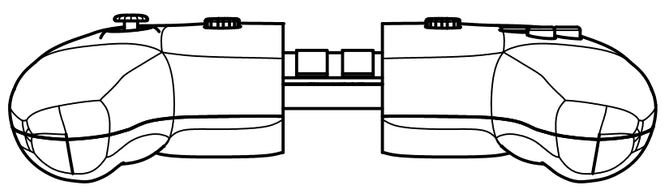

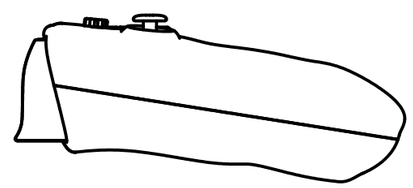

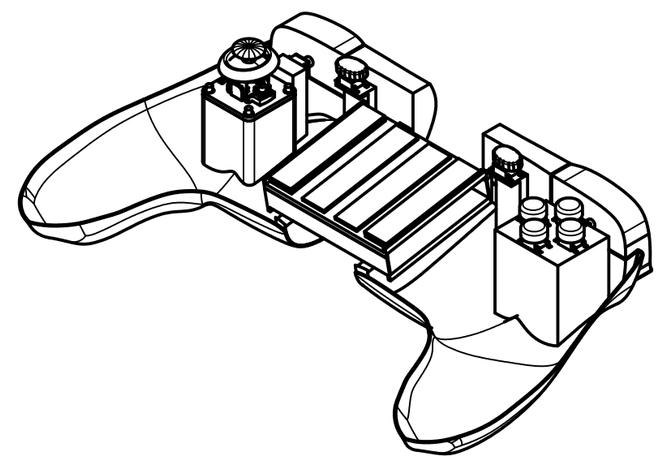

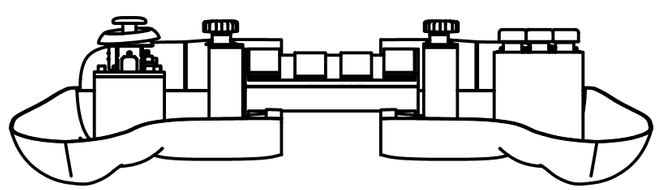

Dept.	Technical reference	Created by Innovative Input 2022-10-24	Approved by
		Document type Assembly	Document status Completed
		Title Expandable Controller Assembly	DWG No.
			Rev. / Date of issue / Sheet 1/1

Parts List

Item	Qty	Part Number	Description	Material
1	1	Right Side Bottom Support	Right side bottom support for shell.	Printed PLA Plastic
2	1	Bottom Shell Right	Bottom right shell of controller.	Printed PLA Plastic
3	1	Arduino Shell	Shell to hold Arduino Nano Every.	Printed PLA Plastic
4	8	Push Button	Buttons used for input.	
5	1	Right Buttons Holder	Platform to hold main buttons.	Printed PLA Plastic
6	1	Magnet	Magnets used to contract and expand controller.	Aluminum
7	1	Main Button Cap	Caps to enclose main buttons.	Printed PLA Plastic
8	1	Menu Button Cap	Caps to enclose start and select buttons.	Printed PLA Plastic
9	1	Top Shell Right	Top right shell of the controller.	Printed PLA Plastic
10	1	JoyStick	General joystick for control.	
11	1	Joystick Loop	Outer joytick loop.	Printed PLA Plastic
12	1	Start Button Holder	Platform to hold start button.	Printed PLA Plastic
13	1	Arduino NANO Every	Arduino used to program controller. The microcontroller.	
14	1	Middle Back Right	Plating beside right trigger.	Printed PLA Plastic
15	1	Select Button Holder	Platform to hold select button.	Printed PLA Plastic
16	1	Pegs	Pegs to hold down joystick.	Printed PLA Plastic
17	1	Trigger Holder Left	Shell to hold left trigger button.	Printed PLA Plastic
18	1	Joystick Holder	Platform to hold joystick.	Printed PLA Plastic
19	1	Middle Back Left	Plating beside left trigger.	Printed PLA Plastic
20	1	Trigger Left	Left Trigger cap for pressing.	Printed PLA Plastic
21	1	Top Shell Left	Top left shell of the controller.	Printed PLA Plastic
22	1	Trigger Right	Right trigger cap for pressing.	Printed PLA Plastic
23	1	Left Side Bottom Support	Left side bottom support for shell	Printed PLA Plastic
24	1	Bottom Shell Left	Bottom left shell of controller.	Printed PLA Plastic

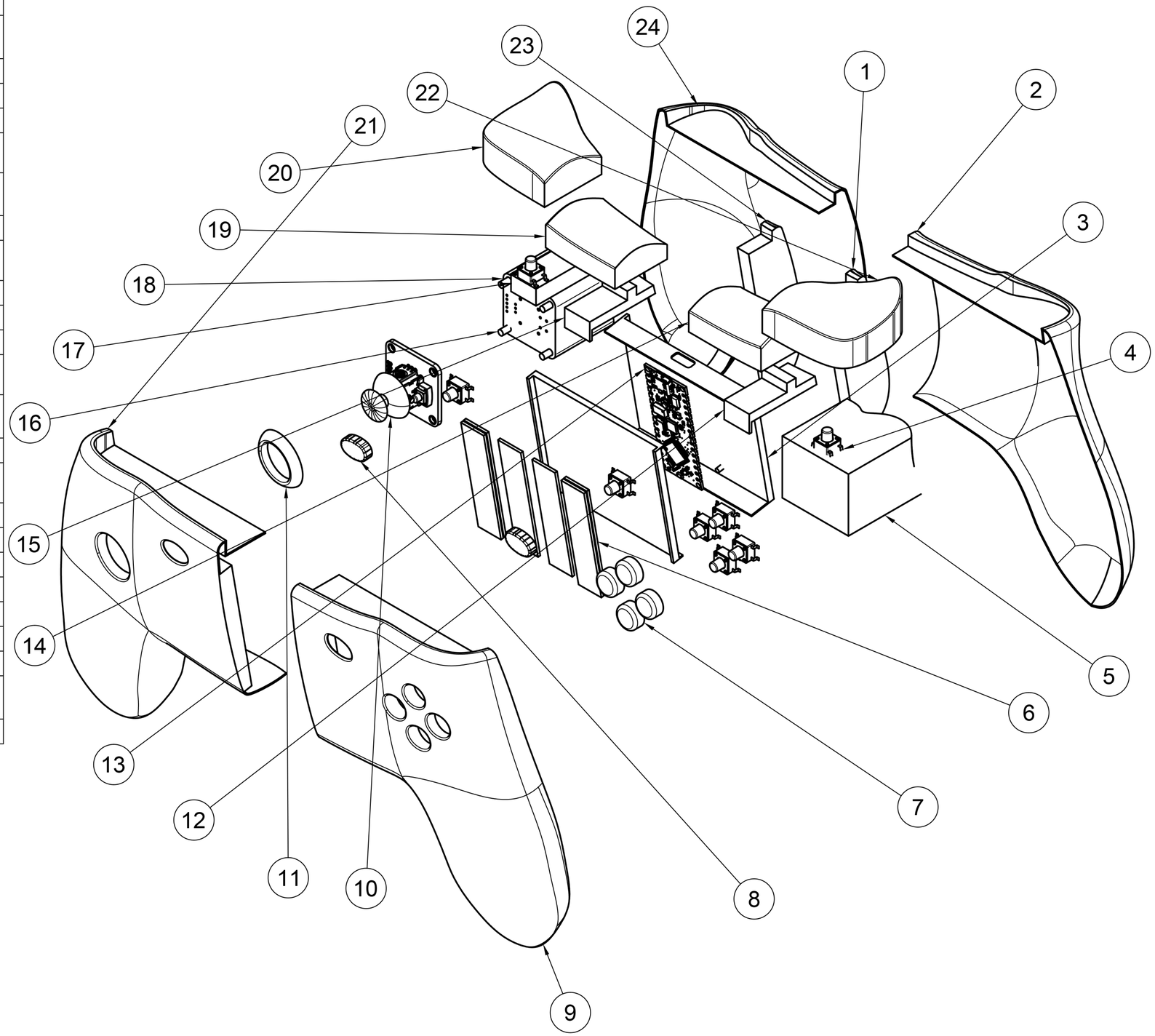

Dept.	Technical reference	Created by	Approved by
		Innovative Input 2022-10-24	
		Document type: Bill of Materials	Document status: Completed
		Title: Expandable Controller Bill of Materials	DWG No.
			Rev. / Date of issue / Sheet 1/1

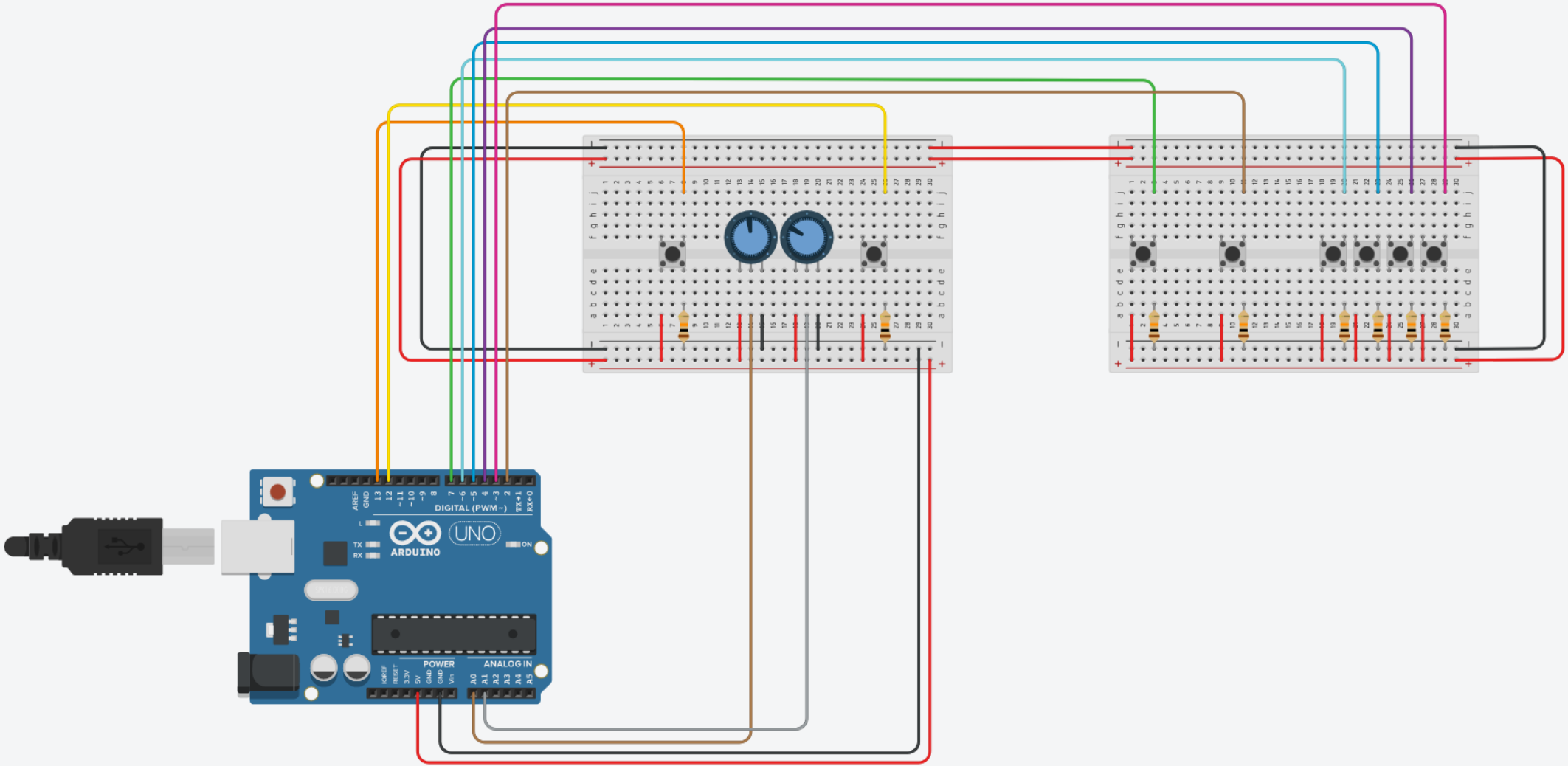
DIGITAL (PWM~)
UNO
ARDUINO
POWER
ANALOG IN

Component	Amount	Role/Representation
Arduino Uno Rev3	x1	Main microcontroller used to program components. Representative of the Arduino Every Nano.
Potentiometer	x2	Representing the analog stick with the X and Y values.
Button	x8	Buttons used for the main four action buttons (Triangle, Circle, Square, X), the menu buttons (Start, Select) and the triggers.
Bread Board	x2	Represents the left and right side of the controller. Used to split up the other components for organization and visualization.
Resistor	x8	Needed for controlling the voltage.
Electrical Wire	x12	Neded for wiring components to the Arduino.

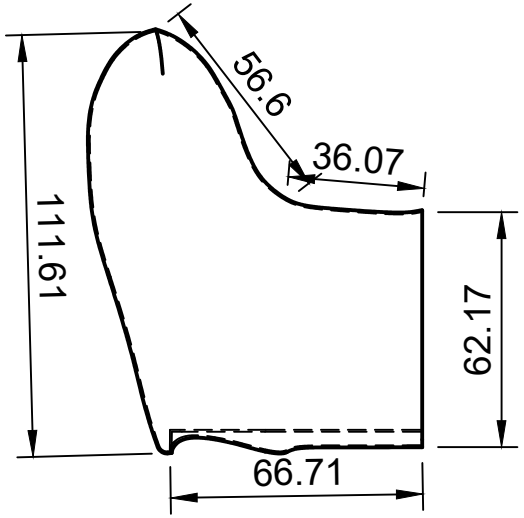

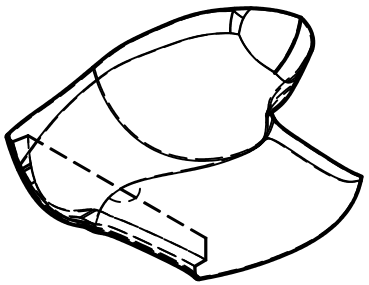

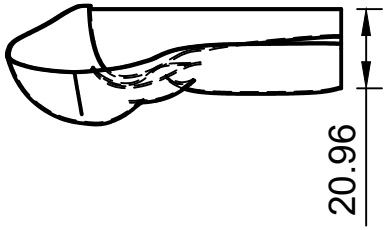

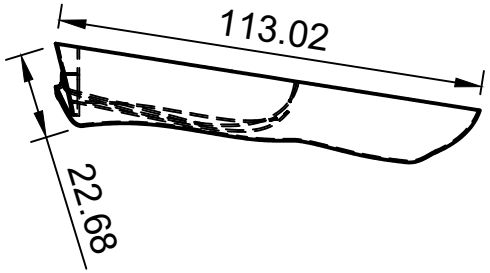

Dept.	Technical reference	Created by Innovative Input 10/24/2022	Approved by	
		Document type Assignment Submission	Document status	
		Title Bottom Shell Left	DWG No. 24	
			Rev. X	Date of issue 10/24/2022	Sheet 1/1

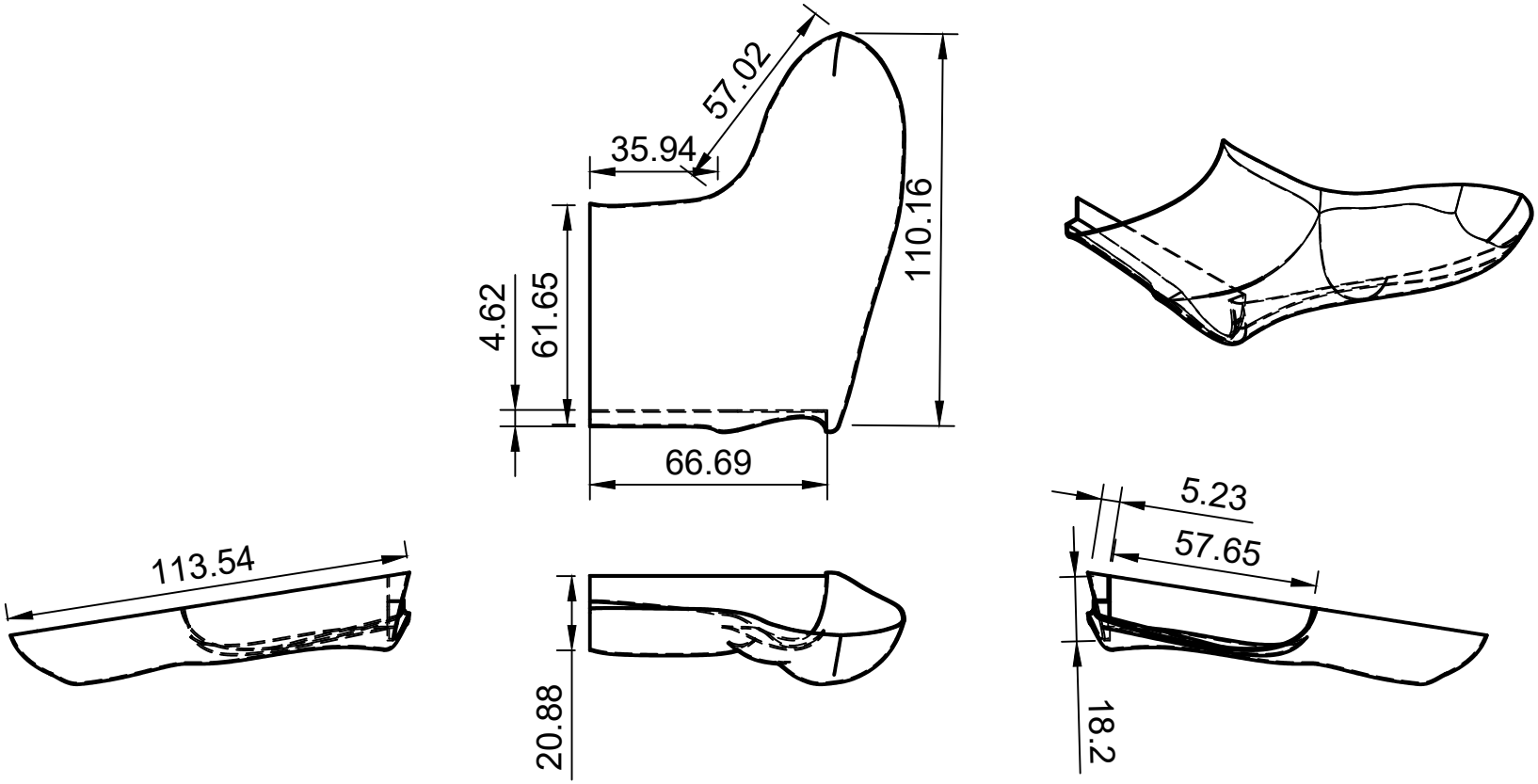

Dept.	Technical reference	Created by Innovative Input 10/25/2022	Approved by	
		Document type Assignment Submission	Document status	
		Title Bottom Shell Right	DWG No. 02	
			Rev. X	Date of issue 10/25/2022	Sheet 1/1

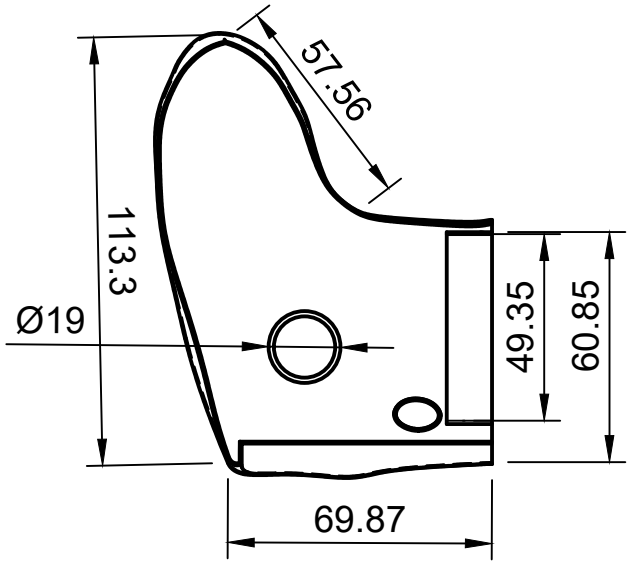

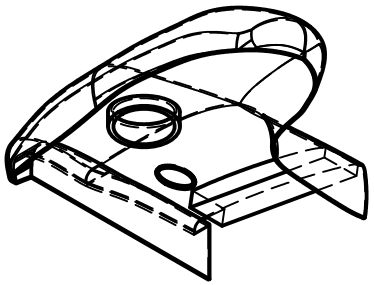

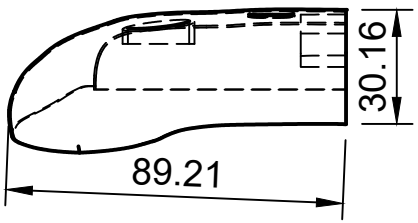

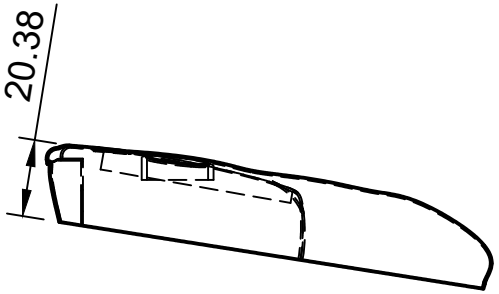

Dept.	Technical reference	Created by Innovative Input 10/24/2022	Approved by	
		Document type Assignment Submission	Document status	
		Title Top Shell Left	DWG No. 21	
			Rev. X	Date of issue 10/24/2022	Sheet 1/1

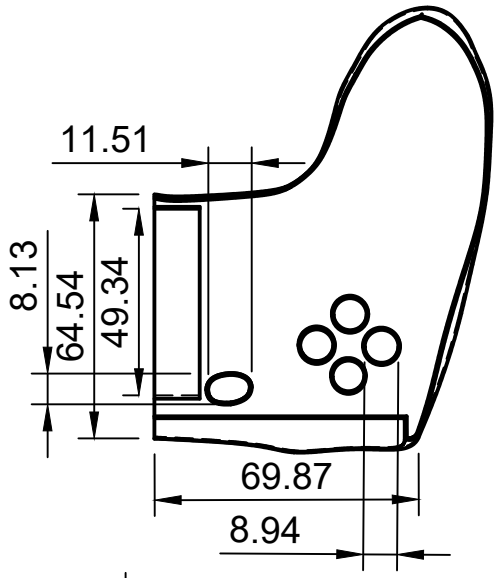

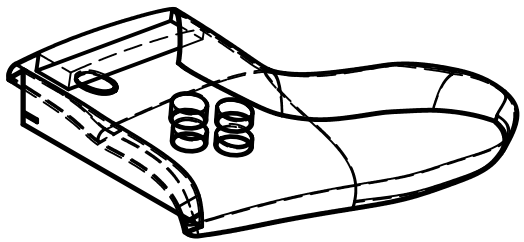

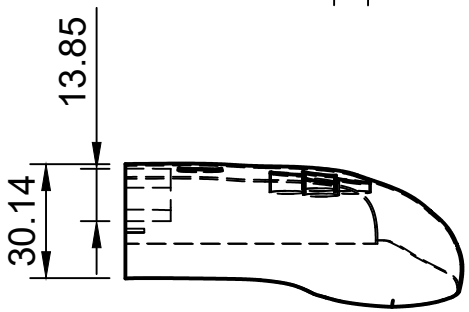

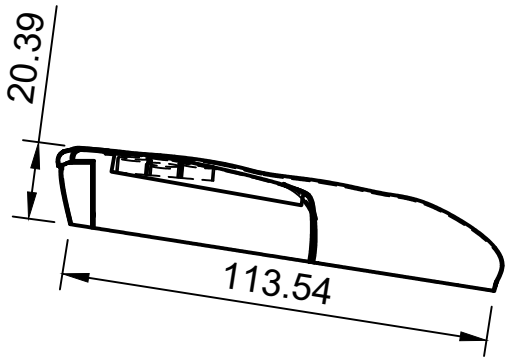

Dept.	Technical reference	Created by Innovative Input 10/24/2022	Approved by	
		Document type Assignment Submission	Document status	
		Title Top Shell Right	DWG No. 09	
			Rev. X	Date of issue 10/24/2022	Sheet 1/1

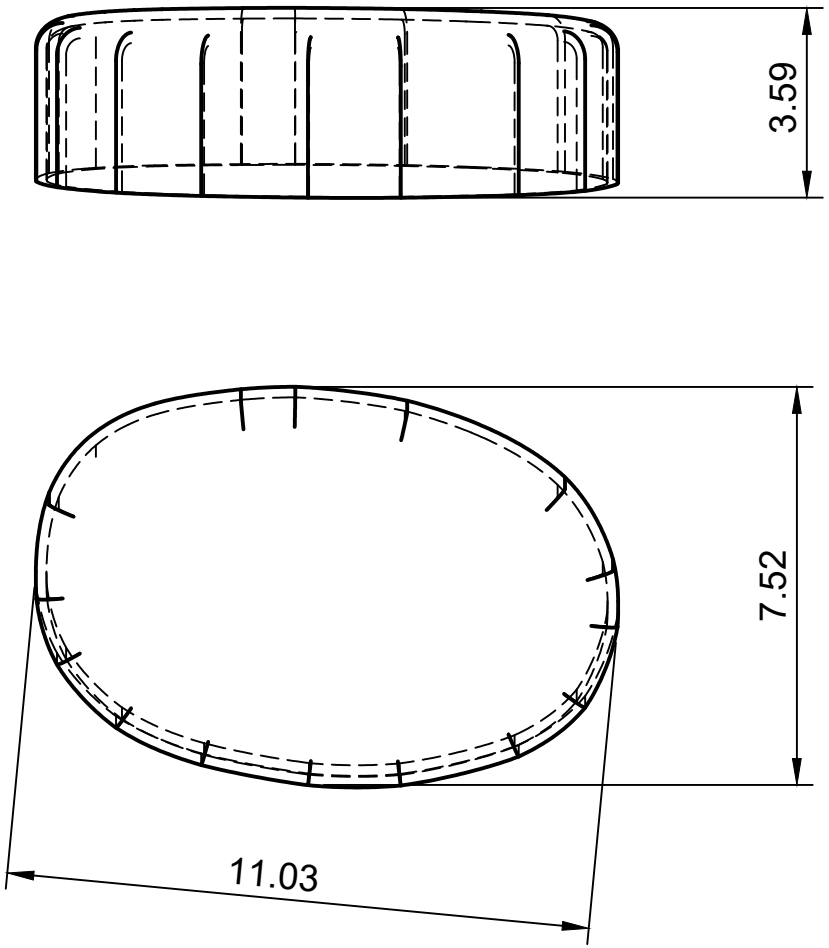

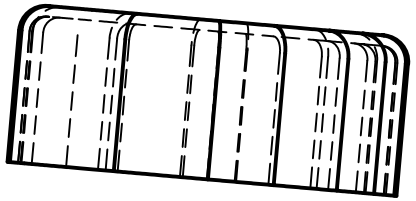

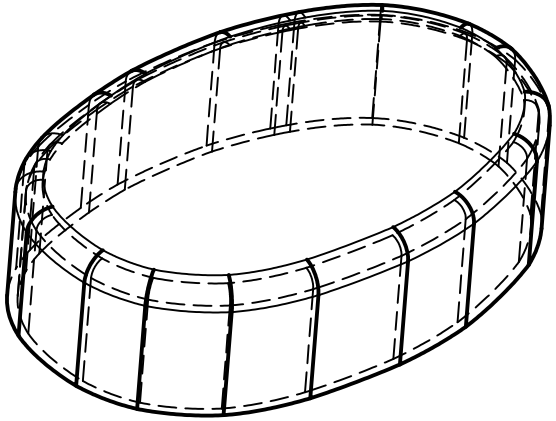

Dept.	Technical reference	Created by Innovative Input 10/25/2022	Approved by	
		Document type Assignment Submission	Document status	
		Title Menu Button Cap	DWG No. 08	
			Rev. X	Date of issue 10/25/2022	Sheet 1/1

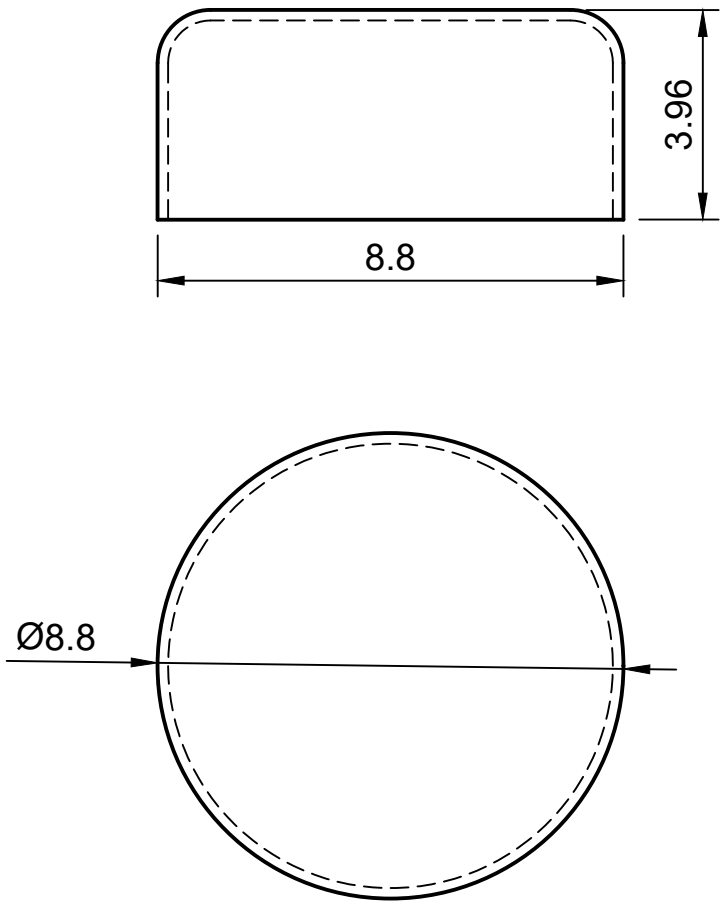

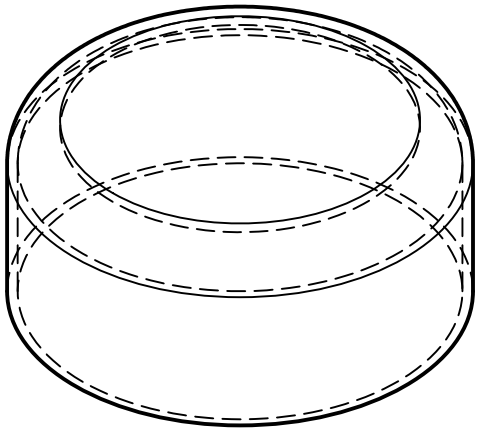

Dept.	Technical reference	Created by Innovative Input 10/25/2022	Approved by
		Document type Assignment Submission	Document status
		Title Main Button Cap	DWG No. 07
			Rev. X / Date of issue 10/25/2022 / Sheet 1/1

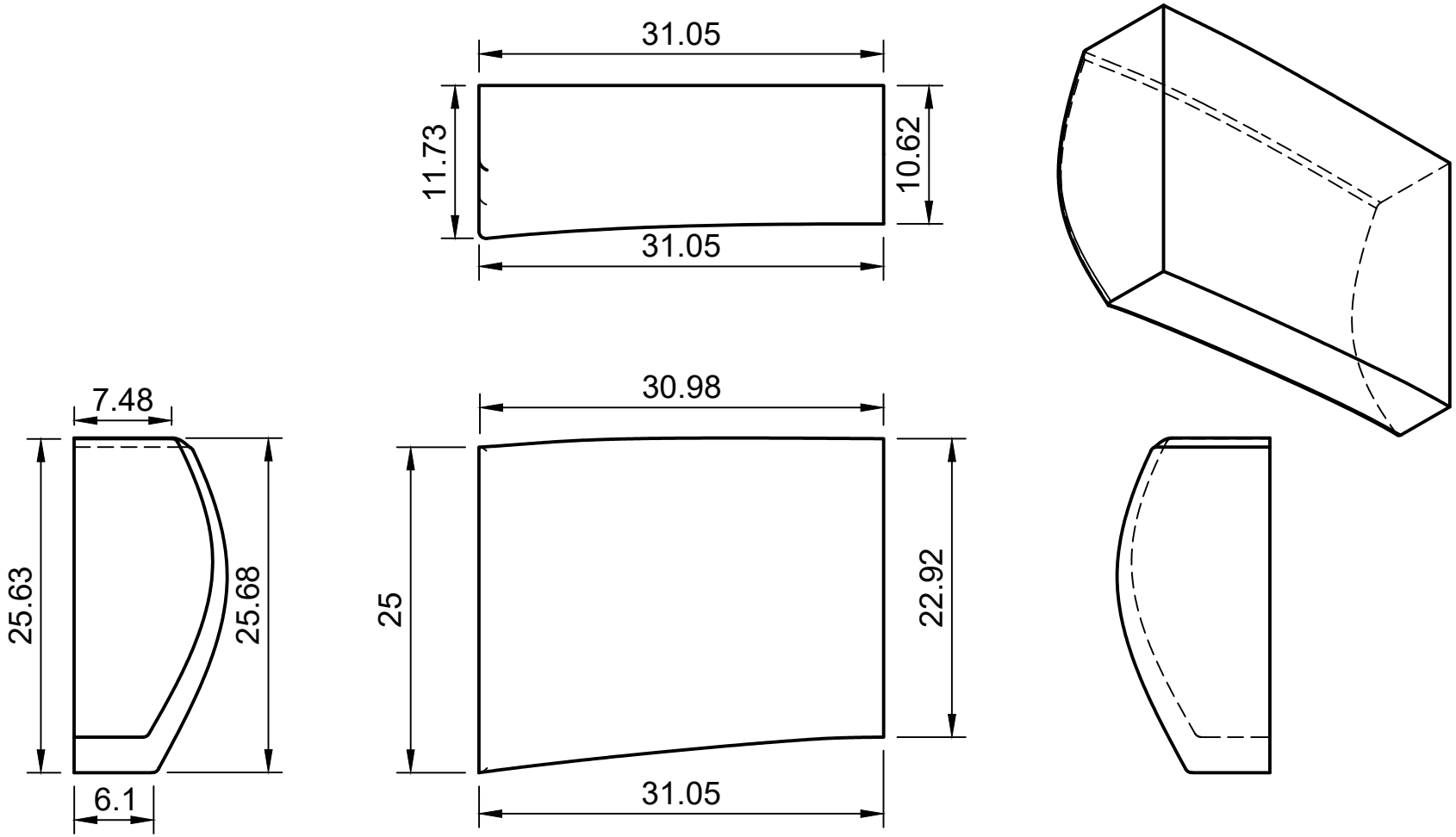

Dept.	Technical reference	Created by Innovative Input 10/25/2022	Approved by	
		Document type Assignment Submission	Document status	
		Title Middle Back Left	DWG No. 19	
			Rev. X	Date of issue 10/25/2022	Sheet 1/1

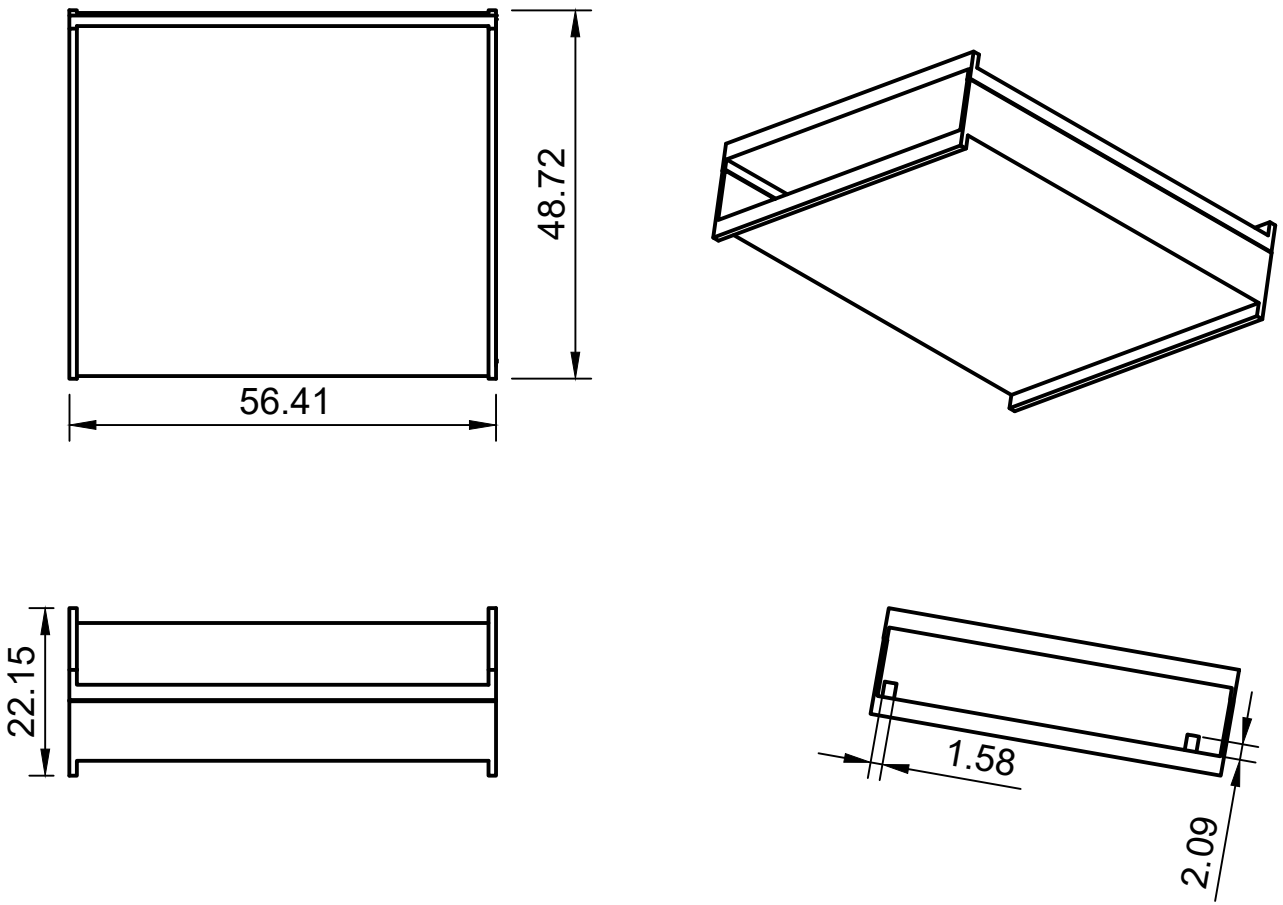

Dept.	Technical reference	Created by Innovative Input 10/25/2022	Approved by	
		Document type Assignment Submission	Document status	
		Title Arduino Shell	DWG No. 03	
			Rev. X	Date of issue 10/25/2022	Sheet 1/1

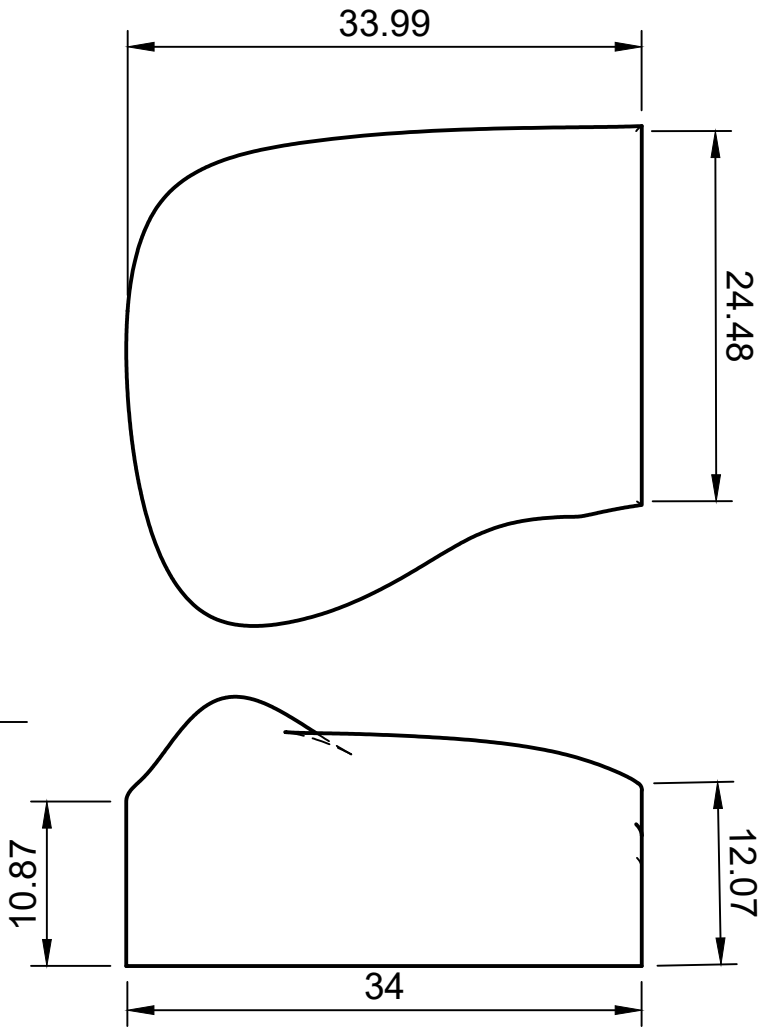

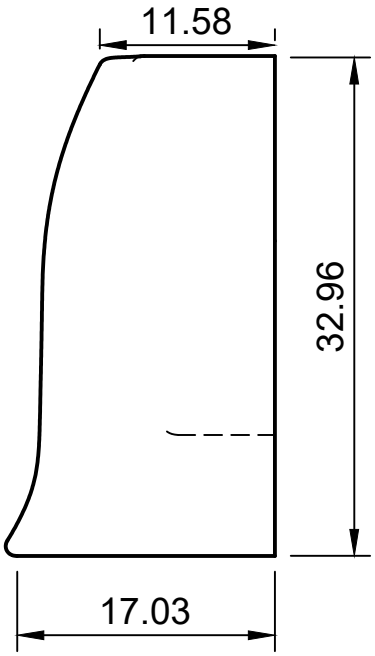

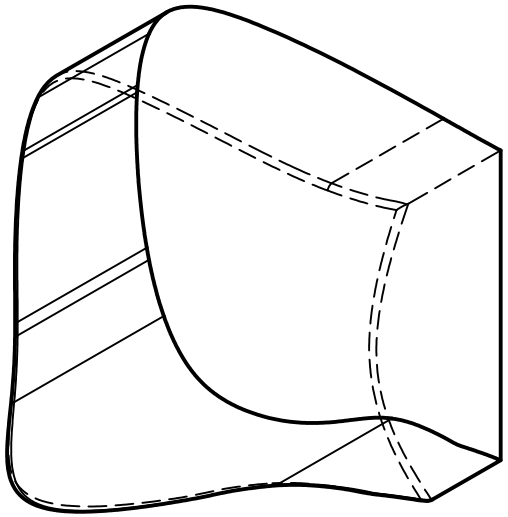

Dept.	Technical reference	Created by Innovative Input 10/25/2022	Approved by	
		Document type Assignment Submission	Document status	
		Title Trigger Left	DWG No. 20	
			Rev. X	Date of issue 10/25/2022	Sheet 1/1

Fusion Model:

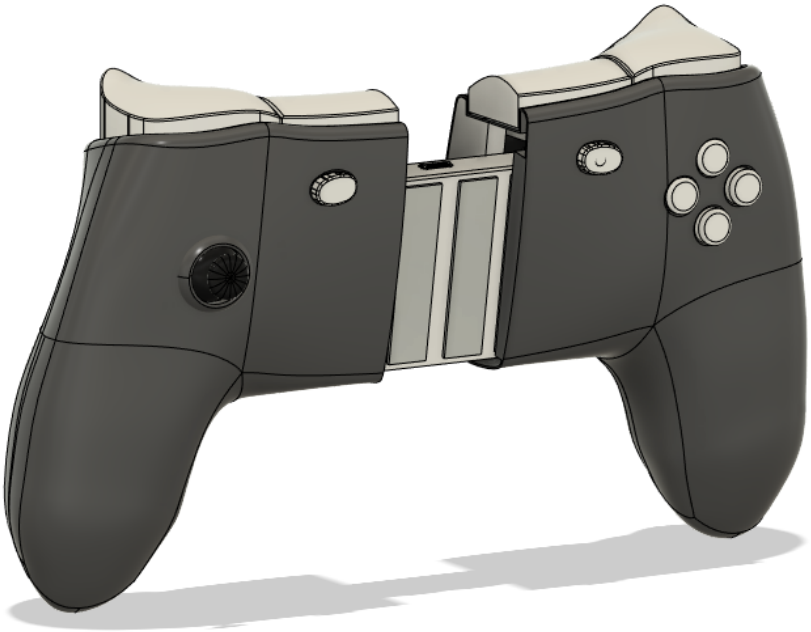

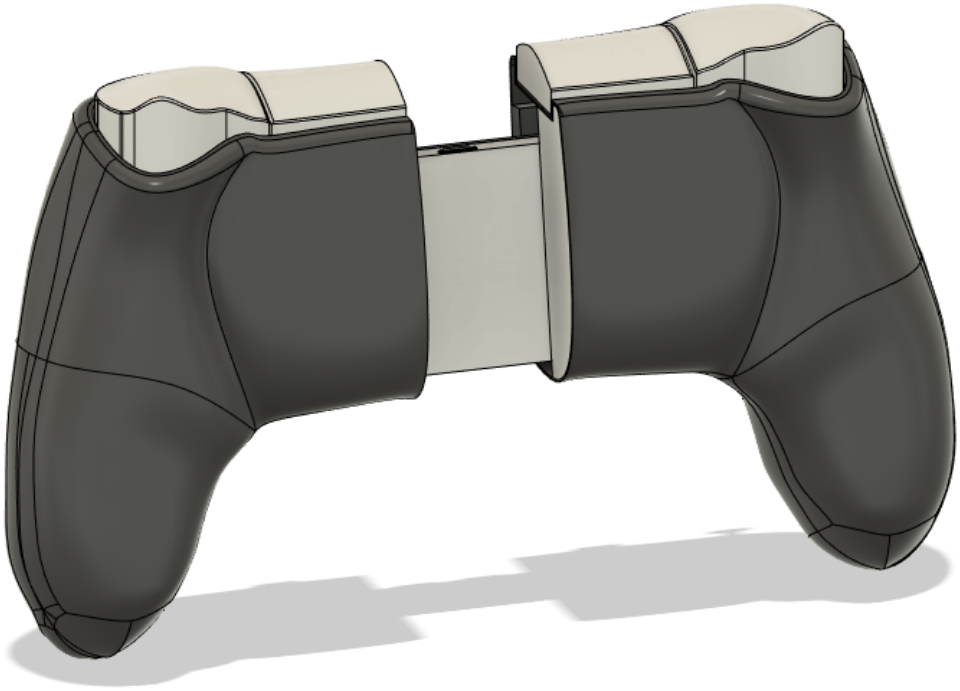
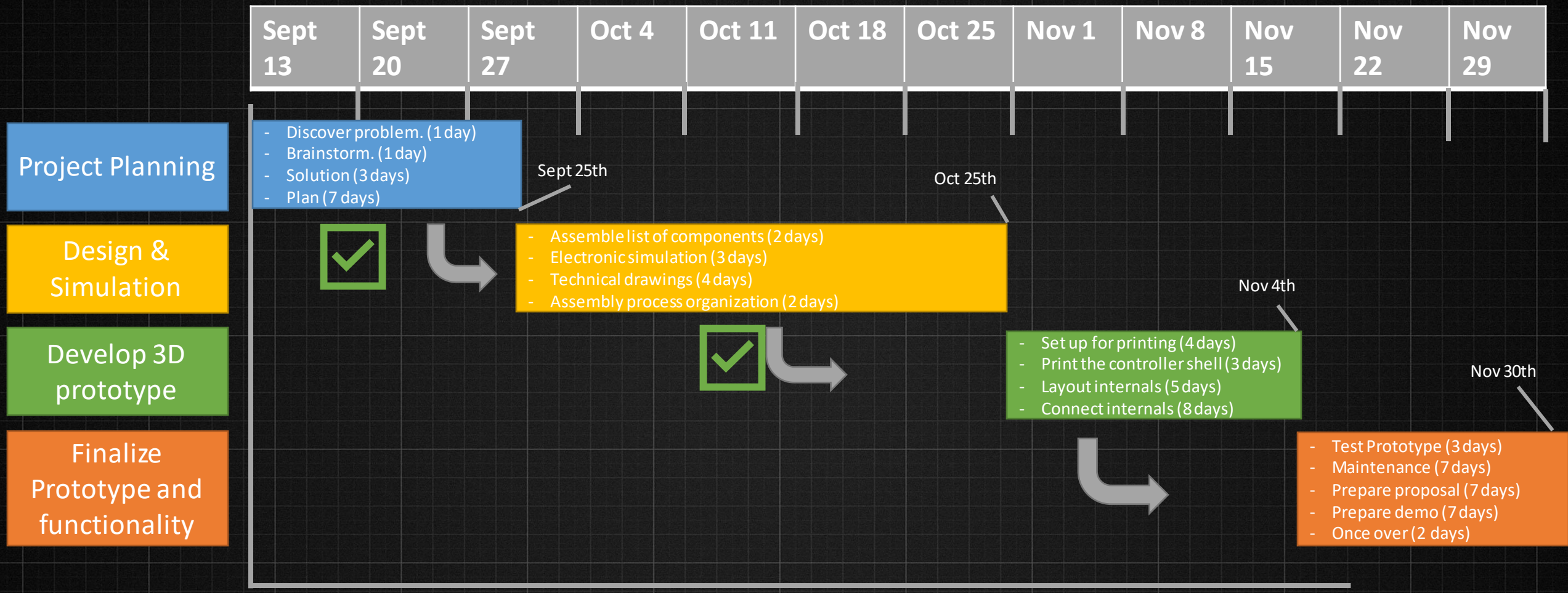
Innovative Input Controller Gantt Chart