Expandable, Contractible, and Ergonomic SNES Game Controller Replacement

Creating an inclusive and intuitive experience for gamers

Waterhouse, Andrew
Ontario Tech University
Innovative Input
Oshawa, Canada
andrew.waterhouse@ontariotechu.net

Faisal, Fardeen
Ontario Tech University
Innovative Input
Oshawa, Canada
fardeen.faisal@ontariotechu.net

Kowalchuk, Ethan
Ontario Tech University
Innovative Input
Oshawa, Canada
ethan.kowalchuk@ontariotechu.net

***Abstract*—Gamers around the world have always been limited to hardware capabilities, either having to sacrifice performance or comfort. That is, until today. The Ex-Co controller is designed to be ergonomic and comfortable to fit the hand sizes of anyone who uses it. After tons of ideation, it was eventually determined that magnets would be the solution. Creating a sliding mechanism from the center would allow for an intuitive interaction between the user and the device. A device such as this has been missing from the market, nothing has been created that serves this exact purpose. SNES controllers are uncomfortable and small, that is why the Ex-Co Controller was designed with a similar button layout in mind. This controller will change the way we play SNES games by offering players a comfortable and functional gaming experience without sacrificing portability, aesthetics, or usability.**

***Index Terms*—comfort, expanding, contracting, Ex-Co, SNES**

Fig. 1: Process Method

I. Introduction

The Ex-Co Controller is the solution to comfortable gaming without making sacrifices. No matter what controller you use, you will find it uncomfortable when first using it. There is always an adaptation period when using new products. Why not make the controller adapt to the player instead? Everyone comes in all shapes and sizes, so why not create a controller that does that too? These are the problems that we have solved with our all new Ex-Co Controller. Ex-Co stands for expandable and contractible. This allows for a quick and easy size adjustment by using sturdy magnets to hold it in place. When playing on an SNES, the controllers feel very small and uncomfortable to hold for long play sessions. The Ex-Co controller has the same button layout consisting of 2 trigger buttons, 1 joystick, 4 game play buttons, and 2 start/select buttons. This will allow players to be enriched with nostalgia without sacrificing comfort. Because players use these controllers for so much time, arthritis can develop in their hands if the controller is not designed with ergonomics and usability in mind. Our controller will completely change the game when it comes to gaming comfortably. This paper will be discussing the process of designing such a controller and how it was able to be brought to fruition using concepts learned in Industrial Design for Game Hardware. It will go over our research, the problems that had to be overcome, the solutions to said problems, and the iterations we made along the way. This will be a detailed delve into the creation of the controller that will change the game, literally.

II. Literature Review

Because this controller is so innovative, no other companies are offering the same user experience. However, there are controllers that try to solve similar problems, just in different ways. For example, Thrustmaster is releasing an alternative device to a traditional Xbox controller that is designed to fit smaller hands. The joysticks can detach and can be replaced with new ones [1]. This solves the problem of users with smaller hands struggling to play games. However, players who have big hands are still getting the short end of the stick. Another product that addresses this issue is the Nintendo switch. The Nintendo switch uses joy-cons to control the device. These are small controllers that attach and detach from the main device. Nintendo offers a variety of controllers that work with the switch, such as the pro controller. The pro controller gives players a more traditional gaming experience. There is also the comfort grip which is another way to use the joy-cons in a slightly more comfortable way. This can be quite cumbersome to users who must carry all of these devices when they could just have it all in one portable device [2]. In this

article, a user notes that “Just by holding the Joy-Con you’re already putting some interference between the controller and the Switch.”. Many users experience the same issues. In a paper written by Brown, Michelle A., and Scott I MacKenzie [3]. It expands more on how controllers were designed to fit the average hand. Using the technique of wrapping a rubber band around the wrist and hand, it was discovered that the average hand size is 15.9 inches. The largest among the participants was 18.3 and the smallest was 13 inches [3]. As one can see, controllers are designed to fit the average person. However, there is a big difference from 13-18 inches. This makes it impossible to design a controller that fits everyone comfortably. Similarly, in another paper, mention of some participants’ hands being too small or too large also arose [4]. This paper goes into depth about what makes a controllers usability experience good and what controllers lack. Using this information, the Ex-Co controller was designed to be more ergonomic among all users.

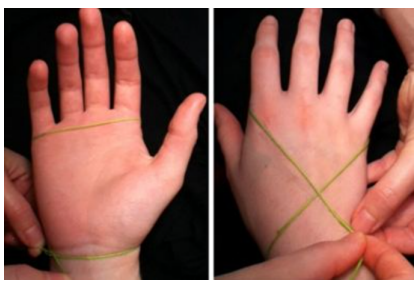

Fig. 2: Method of Measuring Hand Sizes
Source: Adapted from [3]

III. Methods

From beginning to end, there was a lot to consider when designing and developing this controller. It started out with a problem definition and research to confirm the idea did not already exist. After this was a brainstorming session using the iterative design process template. Upon choosing the best idea, creating a prototype was the next logical step. Using cardboard at first then jumping into Blender, a prototype was created. After feeling confident in the idea, creating a Fusion360 model as well as a TinkerCAD circuit mock up was next on the agenda to fully flesh out the idea. Next was 3D printing. After an initial failed print, it was back to the drawing board. Increasing the thickness of our controller was one example of iteration used during the design process. After this, electronic components were needed in order to make the controller functional. To test the controller, a simple game was developed to showcase the functionality. Some simple tweaks were made after this and the final product was ready to go.

A. Flow Chart

See Appendix A for Method Flow Chart.

IV. Results

In the beginning of this assignment, the uncertainty was flowing. Understanding the limitations during the design process was a majour flaw in the plan. It started off smooth while coming up with a problem and brainstorming solutions. After this, creating mock-ups out of cardboard and in Blender helped to visualize the concept physically. After the prototype was made, it was time to work on the model that would be 3D printed. After plenty of iteration, the controller was done. However, more issues came up afterward that forced more iteration. For example, the controller was too thin at first and needed to be thickened. After this, the GrabCAD model of the joystick did not accurately represent the scale of the joystick that had been purchased prior. The changes are reflected in the technical drawings. After finally getting the controller printed properly, it was time for the construction and soldering. One other issue that occurred was due to our lack of experience and ability to foresee issues with wiring. Within the controller, where the Arduino shell is supposed to slide in, the wires were in the way. This made the sliding mechanism work to a lesser degree than initially planned. If this issue was identified earlier on then modifications could have made to the controller to add more clearance room to the controller. Changes could have included major modifications to the controller’s shape, the use of different wires, or some sort of alternative method of wiring. Even though it did not turn out perfect, the team is very happy with how it turned out.

A. Timeline

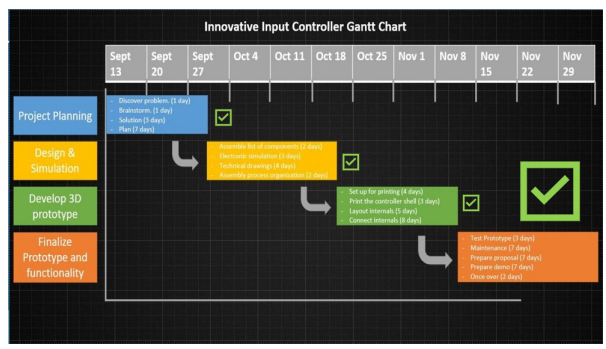

Fig. 3: Project Timeline

This timeline shows a general project overview and when the deliverables were completed. Each assignment was a learning experience and a ton of valuable information was gained because of this. Although it was a struggle, seeing the final product makes it feel worthwhile.

See Appendix B for Iteration Timeline.

B. QFD

This Quality Function Deployment represents the customer needs and design functionality. It also allows for an easy

analysis of competitors such as BackBone, Razer Kishi, Nintendo Switch, and the Scuf Controller. This makes it easy to determine what changes need to be made to ensure customer satisfaction.

See Appendix C for Quality Function Deployment.

The QFD in Appendix C shows that the Ex-Co Controller meets the user needs just as well, if not better, than it's competitors. The numbers are quite similar when comparing user needs and functional requirements with that of the competition. However, there are definitely improvements that could be made in the future. For example, the size variety is lacking more than intended because of unforeseen abundance or wires taking up the room that was meant for the Arduino shell to move in and out of.

C. System Usability Scale

See Appendix D for System Usability Scale Chart.

From the System Usability Data collected as displayed from Fig. 5, it is clear that the to see how the Ex-Co controller was reflected on. A total of five participants were recorded for the SUS chart. Participants' data on Q1 of the SUS ranged from neutral to agree. This shows that participants more less felt comfortable using the controller. Extrapolating the reason to this, one can surmise that the familiar layout of the controller with one of modern controllers is a core reason. Reading along the SUS chart, it can also be seen from Q2, Q3, and Q4 that participants felt that the controller was not unnecessarily complex and that it required little help to no help in order to use it. Again, this points to the familiarity of the controller to other controllers in modern gaming consoles like the PlayStation 4 or the X-Box One. These results are also reflected through the responses gathered from Q7, Q9, and Q10. The results overall indicated that the controller was easy to use but a bit cumbersome based on answers from Q8. Gathering specific feedback revealed this came from the controller's rigidity and the expanding/contracting capabilities of the controllers.

See Appendix E for System Usability Scale Data.

After gathering all the user data, it was determined that our controller would have good usability with a total SUS score of 73. Participants felt that the controller was overall good to use but could be better in some aspects. These included the appearance of the controller and improvements towards to ability of the controller to expand and contract.

V. Controller Evolution

Since the beginning of this course, there was a clear image of what the Ex-Co controller should look like. Although there was a variety of iterations that were made, in the end the controller looks very similar to the initial prototype image.

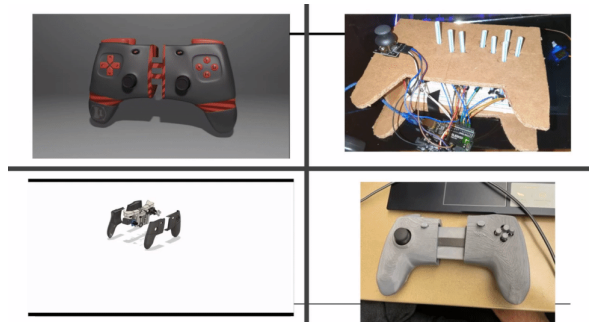

Fig. 4: Evolution Though out the Course

Originally, it was supposed to have more buttons to resemble a more traditional Xbox or PlayStation controller, however, using an Arduino and soldering wires took up a lot more room than anticipated. After down scaling the scope, a functional paper prototype was made with electronics integrated into it. After this, 3D printing was the next issue that needed to be iterated upon. The controller initially printed out way too thin and needed to be thickened. Initially it was 0.5mm and is not 1.5. This made the controller feel a lot more sturdy. The technical drawings in the appendix show the new dimensions of the controller.

See Appendix F-K for Bill of Materials & Technical Drawings.

VI. Wiring and Circuitry

Due to the size of the controller the wiring was very difficult to get done. The Ex-Co controller had the Arduino Nano Every sit in the middle shell where wires led to both the right side and left side of the controller. Wires going to the left were connected to the left trigger, the select button, the joystick and the servo-motor which acted as a pseudo vibration motor for the controller whenever the player hit the start or select button. Wires off to the right side were connected to the four main buttons, the right trigger, the start button, and a blue LED which lighted up to show the controller was connected. Due to the amount of components and the design of the controller, soldering all of these wires was a very difficult challenge. The sheer amount of wires also affected the controller's ability to contract.

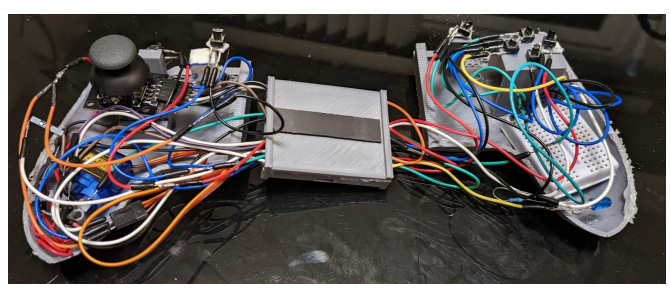

Fig. 5: Full Internal Circuits

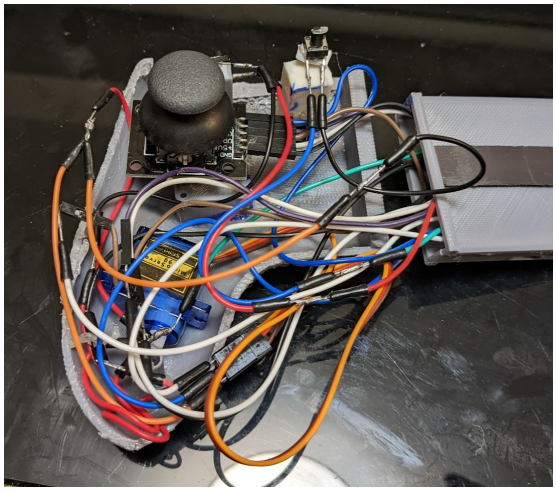

Fig. 6: Left Side Circuits

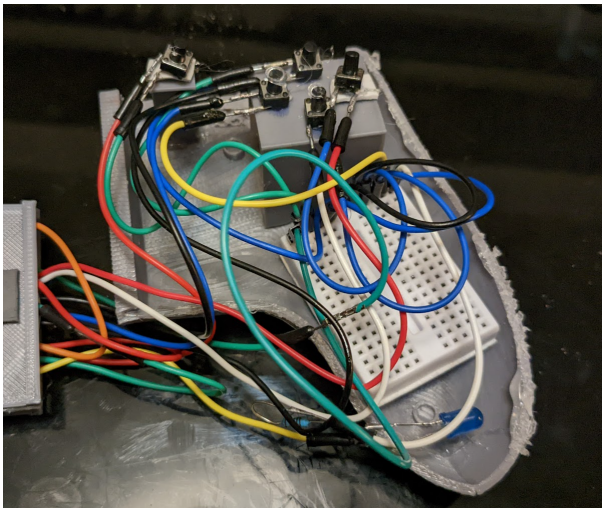

Fig. 7: Right Side Circuits

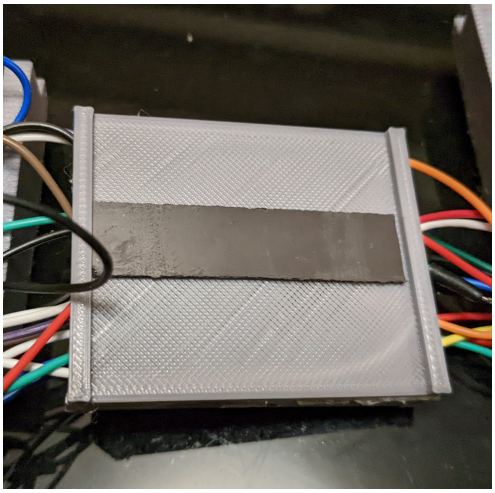

Fig. 8: Arduino NANO Center Piece

VII. Takeaways

There were many lessons learned throughout this project. Through trial and error, eventually the final version of the Ex-Co controller was brought to life. The goal of this controller was, and still is to create a comfortable experience for gamers. When comparing this controller to older SNES controllers, the difference is astonishing. The SNES controller was small and blocky which led to uncomfortable gaming. Now, gamers can finally reminisce about the classics without sacrificing their comfort. When designing this controller, there was no real reference for scope. With very limited experience, initially the scope for this project was a full controller with 2 joysticks, a D-pad and 2 additional trigger buttons. However, this was just not possible to fit into the controller since the main goal was to create an expandable and contractible controller. On top of this, 3D printing was another big challenge. Having access to only two 3D printers was a problem since plenty of other groups needed to print and the Ex-Co Controller took upwards of 50 hours to complete. This made it impossible to iterate because there was no room for mistakes. The solution that we came up with was to purchase a new 3D printer for personal use. This was an expensive, yet necessary investment. This way, the prints would go much faster and changes could easily be made. Another issue that was prominent during the design process was the use of GrabCAD models. Our controller was designed around the sizes of models from GrabCAD. However, the components that were purchased on amazon were different sizes than the ones on GrabCAD. This completely changed the internal layout of our controller. The shell and holding blocks needed to be completely redone because of this. Luckily, having an extra printer meant iteration was possible. If we were to redo this project, we would have scoped down on our design and made it a simpler design. Creating the rounded controller is very ergonomic and is aesthetically pleasing, however, the technical component that comes with it makes it very challenging to design internal layouts. We struggled to fit all of our components into such a small shell. We may have taken a different approach to the expandable and contractible component since it was hard to work around the center piece. Because of this mechanic, the center piece has to slide in and out of the main controller shell meaning that all of the space that would be taken up by the centerpiece when the controller is fully collapsed is off limits. This really limited the space that we could lay internal components and would have worked better if we designed the controller to expand and contract in a different way.

Appendix A
Method Flowchart

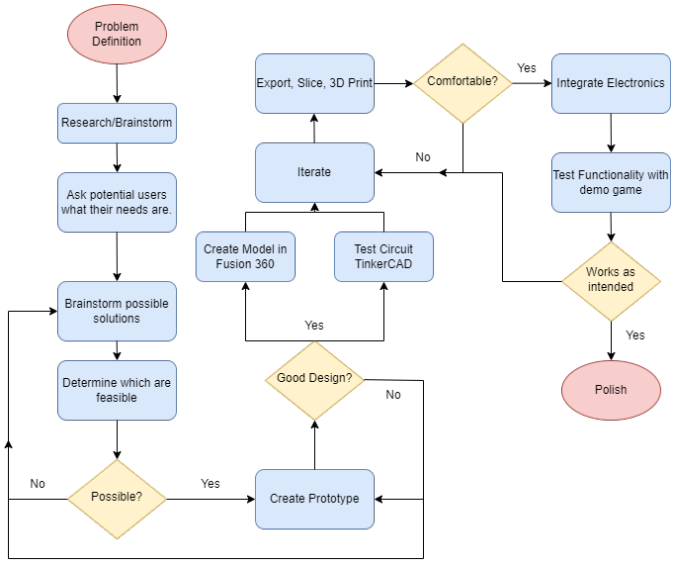

Appendix B
Iteration Timeline

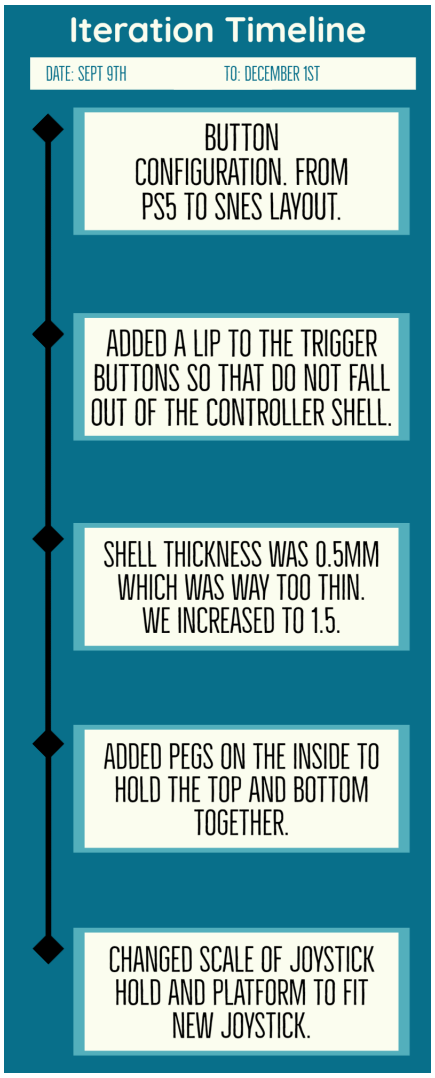

Appendix C
Quality Function Deployment

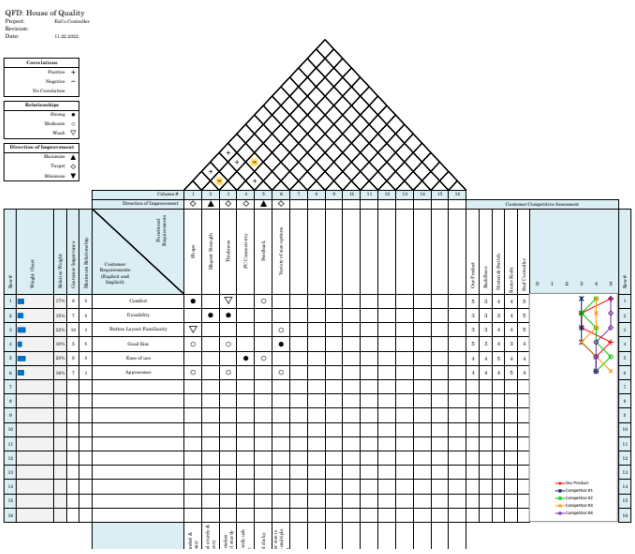

Appendix D
System Usability Scale Chart

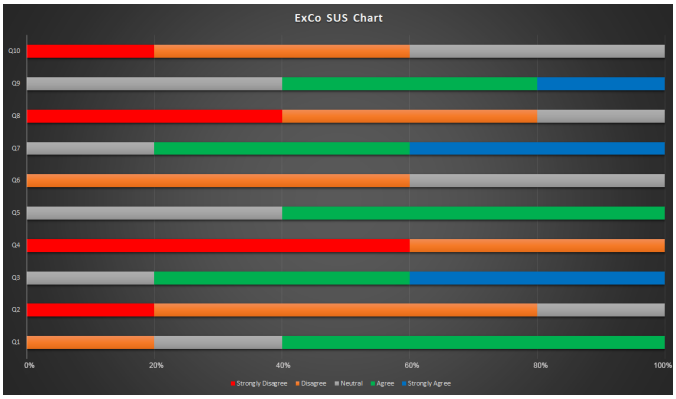

Appendix E
System Usability Scale Data

A	B	C	D	E	F	G	H	I	J	K	L
Participant	Q1	Q2	Q3	Q4	Q5	Q6	Q7	Q8	Q9	Q10	
	I think that I would lik	I found the system	I thought the system	I think that I would	I found the vari	I thought there	I would imagine	I found the system	I felt very confider	I needed to learn a lot of	Score
1	3	2	5	1	4	2	3	2	5	2	77.5
2	4	1	4	2	4	3	5	1	4	3	77.5
3	4	2	5	1	4	2	5	1	4	1	87.5
4	2	2	3	2	3	3	4	3	3	2	57.5
5	4	3	4	1	3	2	4	3	3	3	65
										Total SUS Score	73

Appendix F
Bill of Materials

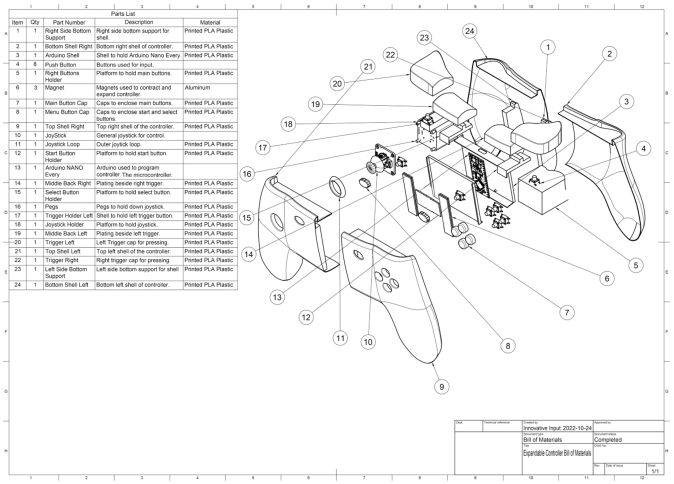

Parts List

Item	Qty	Part Number	Description	Material
1	1	Right Side Bottom Support	Right side bottom support for shell.	Printed PLA Plastic
2	1	Bottom Shell Right	Bottom right shell of controller.	Printed PLA Plastic
3	1	Arduino Shell	Shell to hold Arduino Nano Every.	Printed PLA Plastic
4	8	Push Button	Buttons used for input.	
5	1	Right Buttons Holder	Platform to hold main buttons.	Printed PLA Plastic
6	3	Magnet	Magnets used to contract and expand controller.	Aluminum
7	1	Main Button Cap	Caps to enclose main buttons.	Printed PLA Plastic
8	1	Menu Button Cap	Caps to enclose start and select buttons.	Printed PLA Plastic
9	1	Top Shell Right	Top right shell of the controller.	Printed PLA Plastic
10	1	JoyStick	General joystick for control.	
11	1	Joystick Loop	Outer joylck loop.	Printed PLA Plastic
12	1	Start Button Holder	Platform to hold start button.	Printed PLA Plastic
13	1	Arduino NANO Every	Arduino used to program controller. The microcontroller.	
14	1	Middle Back Right	Plating beside right trigger.	Printed PLA Plastic
15	1	Select Button Holder	Platform to hold select button.	Printed PLA Plastic
16	1	Pegs	Pegs to hold down joystick.	Printed PLA Plastic
17	1	Trigger Holder Left	Shell to hold left trigger button.	Printed PLA Plastic
18	1	Joystick Holder	Platform to hold joystick.	Printed PLA Plastic
19	1	Middle Back Left	Plating beside left trigger.	Printed PLA Plastic
20	1	Trigger Left	Left Trigger cap for pressing.	Printed PLA Plastic
21	1	Top Shell Left	Top left shell of the controller.	Printed PLA Plastic
22	1	Trigger Right	Right trigger cap for pressing.	Printed PLA Plastic
23	1	Left Side Bottom Support	Left side bottom support for shell.	Printed PLA Plastic
24	1	Bottom Shell Left	Bottom left shell of controller.	Printed PLA Plastic

Dept. | Technical reference | Created by: Innovative Input 2022-10-24 | Approved by | Document type: Bill of Materials | Document status: Completed | Title: Expandable Controller Bill of Materials | Rev. | Date of issue | Sheet 1/1

Appendix G
Technical Drawing: Arduino Shell

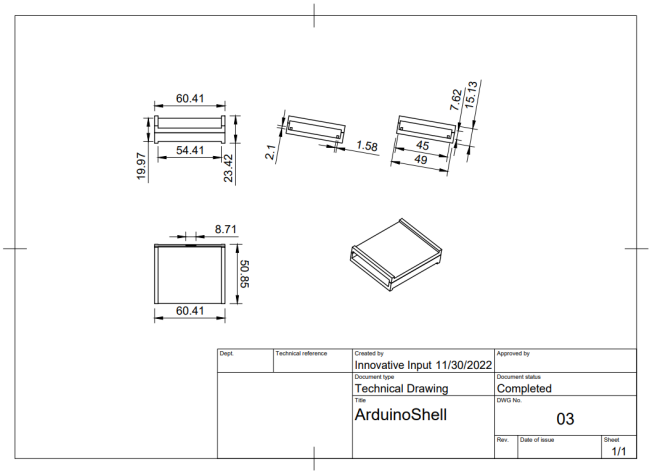

Appendix H
Technical Drawing: Top Right Shell

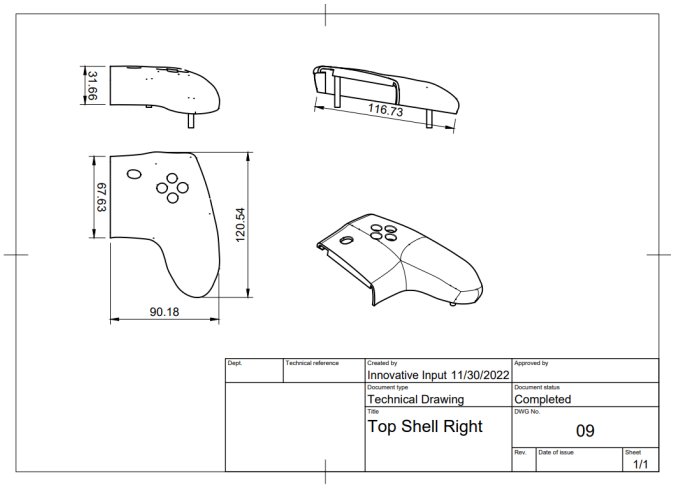

Click to view images

Appendix I
Technical Drawing: Top Left Shell

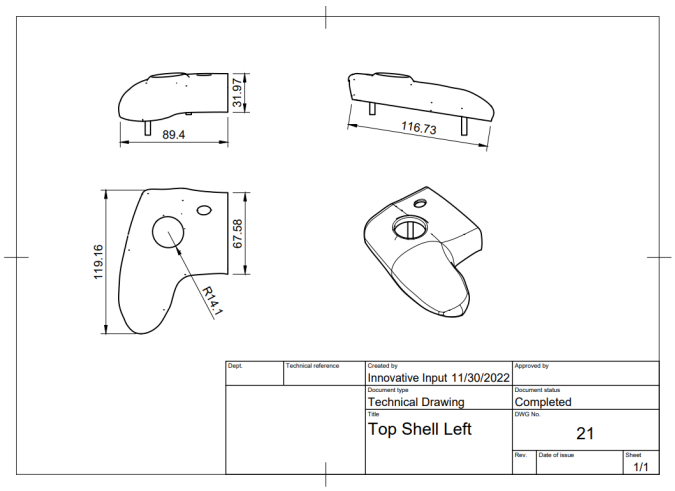

Appendix J
Technical Drawing: Bottom Right Shell

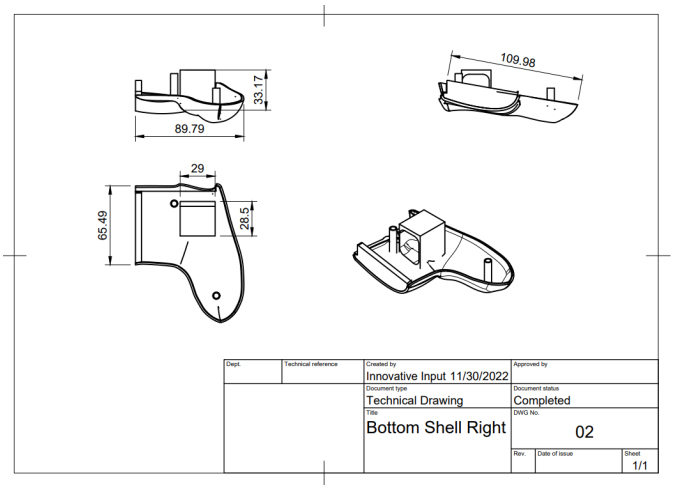

Appendix K
Technical Drawing: Bottom Left Shell

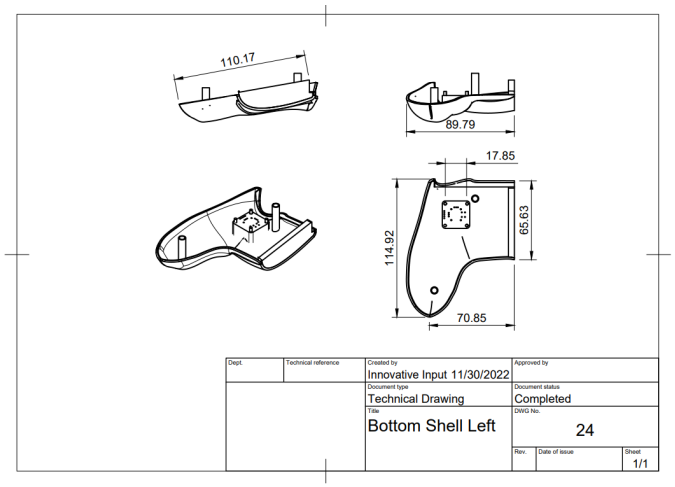

REFERENCES

[1] M. Freeman-Mills, "Thrustmaster launches a Pro Xbox Controller for smaller hands," Pocket, 20-Apr-2022. [Online]. Available: https://www.pocket-lint.com/games/news/xbox/160817-thrustmaster-eswap-s-pro-controller-xbox. [Accessed: 29-Nov-2022].

[2] M. Kim, "My frustrating journey to find a perfect pair of Nintendo Switch Joy-cons," USgamer.net, 13-Apr-2019. [Online]. Available: https://www.usgamer.net/articles/my-frustrating-journey-to-find-a-perfect-pair-of-nintendo-switch-joy-cons. [Accessed: 29-Nov-2022].

[3] M. A. Brown and S. I. MacKenzie, "Evaluating Video Game Controller Usability as Related to User Hand Size," Evaluating video game controller usability as related to user hand size, 2013. [Online]. Available: https://www.yorku.ca/mack/mhci2013c.html. [Accessed: 29-Nov-2022].

[4] G. W. Young, A. Kehoe, and D. Murphy, "Usability testing of video game controllers: A case study: 16: GAM," Usability Testing of Video Game Controllers, 19-Dec-2016. [Online]. Available: https://www.taylorfrancis.com/chapters/edit/10.1201/b21564-16/usability-testing-video-game-controllers-case-study-gareth-young-aidan-kehoe-david-murphy. [Accessed: 29-Nov-2022].