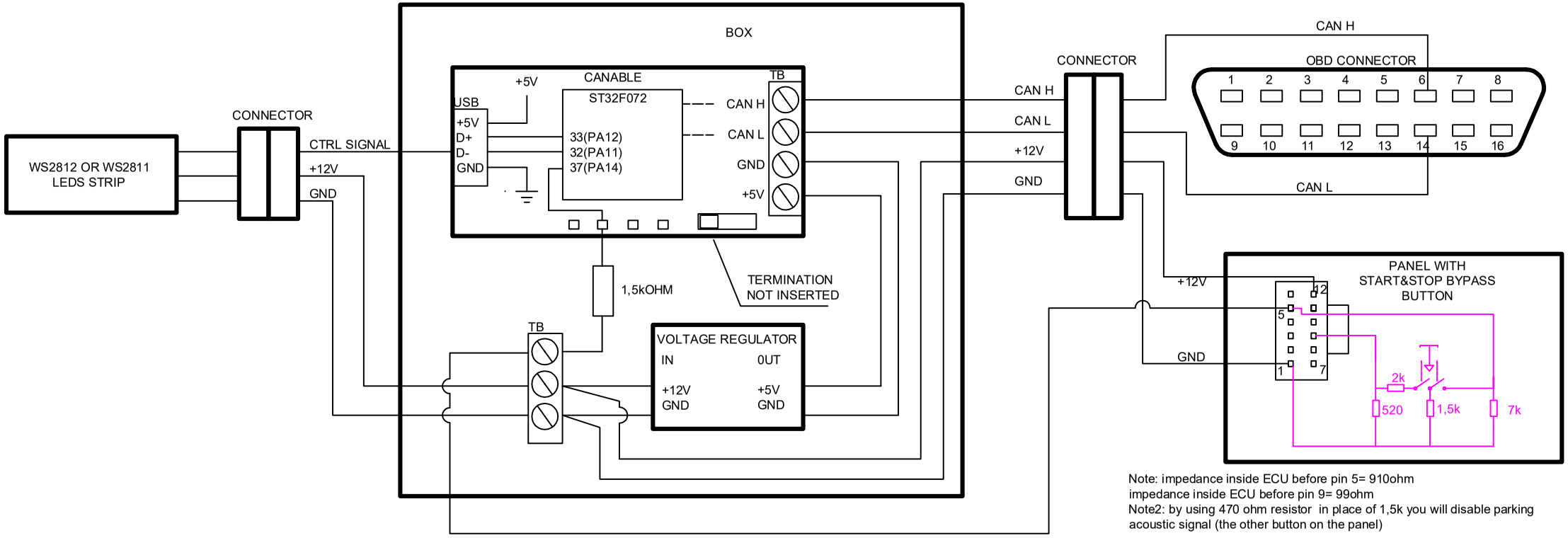

Note: impedance inside ECU before pin 5= 910ohm
impedance inside ECU before pin 9= 99ohm
Note2: by using 470 ohm resistor in place of 1,5k you will disable parking acoustic signal (the other button on the panel)