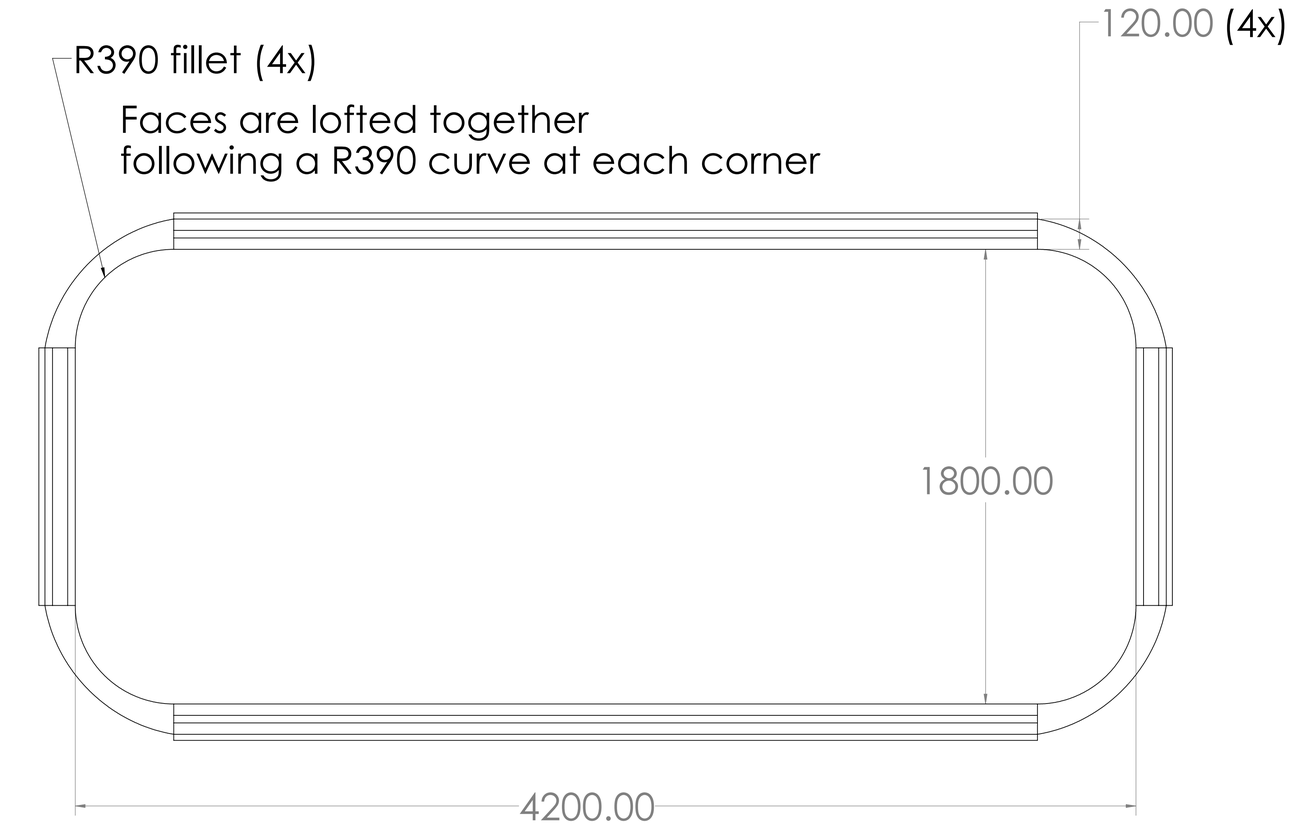

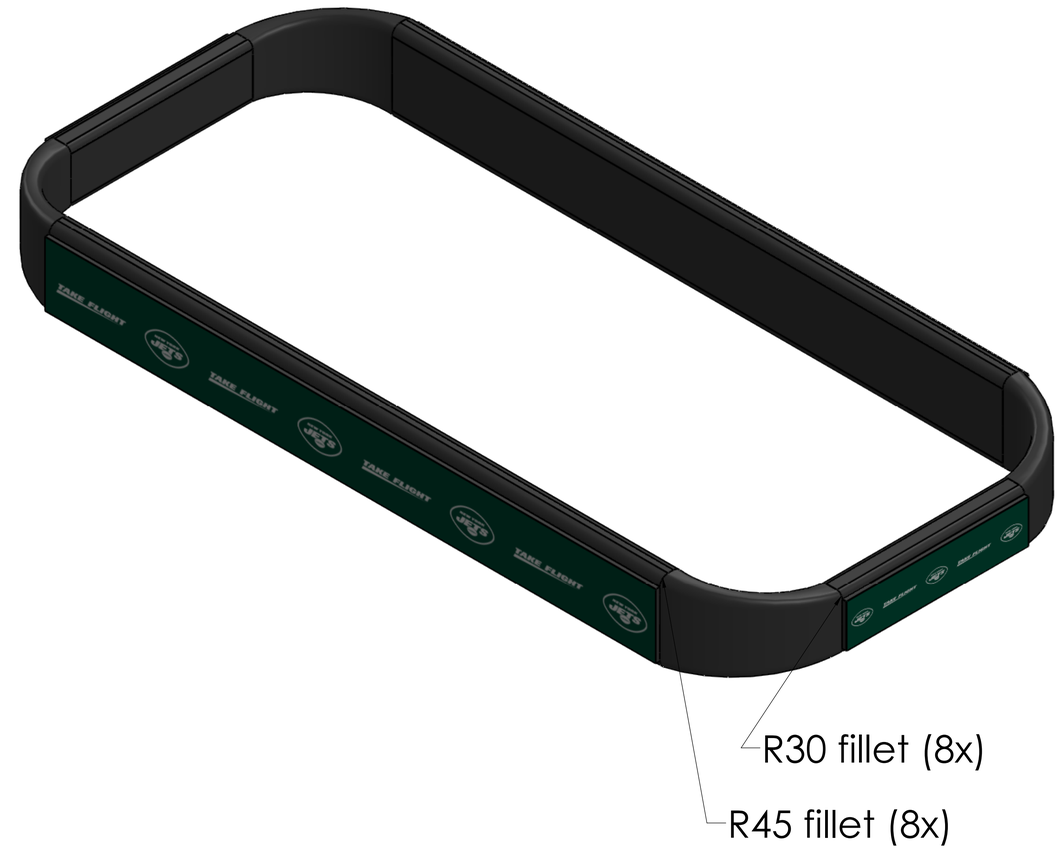

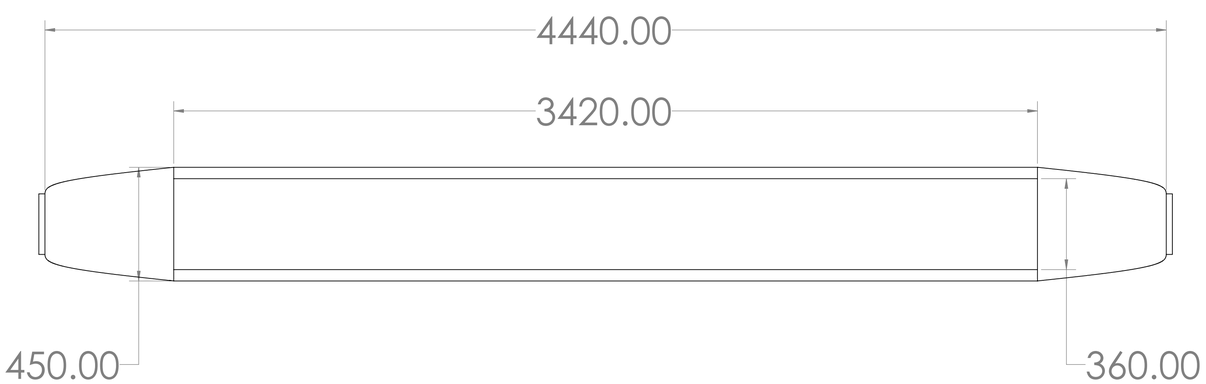

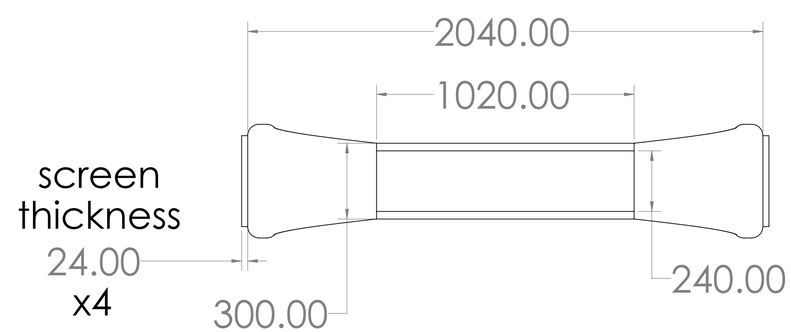

PROPRIETARY AND CONFIDENTIAL
THE INFORMATION CONTAINED IN THIS DRAWING IS THE SOLE PROPERTY OF <INSERT COMPANY NAME HERE>. ANY REPRODUCTION IN PART OR AS A WHOLE WITHOUT THE WRITTEN PERMISSION OF <INSERT COMPANY NAME HERE> IS PROHIBITED.

NEXT ASSY | USED ON
APPLICATION

UNLESS OTHERWISE SPECIFIED:
DIMENSIONS ARE IN INCHES
TOLERANCES:
FRACTIONAL ±
ANGULAR: MACH ± BEND ±
TWO PLACE DECIMAL ±
THREE PLACE DECIMAL ±
INTERPRET GEOMETRIC TOLERANCING PER:
MATERIAL
Metals, plastics, and glass
FINISH
DO NOT SCALE DRAWING

	NAME	DATE
DRAWN	IG	12/19/22
CHECKED	TLC & AY	12/21/22
ENG APPR.		
MFG APPR.		
Q.A.		

COMMENTS:

Property of ATI Group
TITLE:
Jumbotron

SIZE D | DWG. NO. 7 of 17 | REV A
SCALE: 1:300 WEIGHT: SHEET 1 OF 1

SOLIDWORKS Educational Product. For Instructional Use Only.