UNIVERSITÀ DEL SALENTO

Department of Innovation Engineering
Master's Degree in Management Engineering

ROBOTIZED MANUFACTURING and FMS

Project Work

Design of the Production Process for Electrical Sockets Shells in Humid Environments

Angelo Foggetti

20082267

Academic Year 2023/2024

TABLE OF CONTENTS

1. INTRODUCTION 3
2. PRODUCT DESCRIPTION AND MANUFACTURING PROCESS 3
2.1 Manufacturing Feature and semi-finished product 3
2.2 Machining Workingstep 5
2.3 Process Graph and Part Program 7
3. MACHINE AND PALLET CONFIGURATION 10
4. LU STATION 12
4.1 Webots Simulation 13
5. FMS SYSTEM CONFIGURATION 14
6. PRODUCT MODIFICATIONS AND IMPACT ON THE PRODUCTION PROCESS 17

APPENDIX A - Technical drawing of the finished product 20
APPENDIX B - Technical drawing of the semi-finished product 20
APPENDIX C - Machining Workingstep 21
APPENDIX D -Technical drawing of the pallet 27
APPENDIX E - Technical drawing of the finished product with modifications 28
APPENDIX F - Technical drawing of the semi-finished product with modifications 28

FILES 29

1. INTRODUCTION

Sockets located in damp rooms or exposed to direct contact with water, such as those in kitchens, bathrooms or outdoor areas, are particularly susceptible to moisture and may be subject to short circuits. This situation poses a serious safety risk as it increases the likelihood of malfunctions in the electrical system. This report, therefore, focuses on the design of the production process for aluminium protective shells, designed to guarantee the safety of BTicino's Magic series of 503/2 or 503/3 type plates. These plates, although differing in the number of modules (2 and 3 respectively), have the same height and length. It is relevant to note that although these plates were launched on the market many decades ago, they are still widely used in today's electrical systems.
A manufacturing system based on FMS (Flexible Manufacturing System) with CNC machines will be used to produce these shells. The part program will be developed following the STEP-NC approach and an anthropomorphic cobot will be used for pallet preparation in the LU station. The main objective of the report is the optimal configuration of the production system, defining the appropriate number of resources (machines and cobots) to meet the expected demand of 18 parts/h.
As an example, Figure 1 shows a reproduction of a BTicino Magic 503/3 plate with its protective shell installed above it.

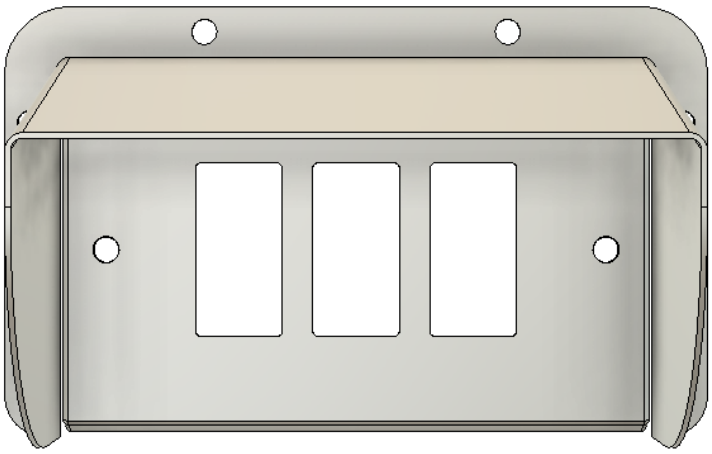

Figure 1. BTicino Magic 503/3 plate reproduction with protective shell (Autodesk Fusion 360)

2. PRODUCT DESCRIPTION AND MANUFACTURING PROCESS

2.1 Manufacturing Feature and semi-finished product

The protective shell to be built can be described by means of four macro-features: two contoured side walls that serve to keep rainwater from entering laterally, a roof inclined at 15° to the horizontal that serves to let the water fall away, preventing it from coming back due to surface tension, and finally a flange with holes that serves to install the shell to the wall by means of screws. The two walls and the roof represent the protective shell. To describe the part in detail, reference is made to four feature types shown in Table 1.

Table 1. Geometric features and associated code

Code	Description
PF	Planar Surface
CF	Curved Surface
R	Fillet Radius
H	Hole

These acronyms are then accompanied by one or more numbers in order to uniquely identify each geometric feature. All features on the left side wall are given the number 4, and those on the right-side wall the number 3. Flange features, on the other hand, are identified using the number 2, followed by .1 or .2 depending on whether it is the front or the rear surface. Before providing an overview of the part and its features, Figure 2 shows the front, rear and left side views. In these figures, those features that are more difficult to identify have been highlighted to avoid ambiguities of interpretation, namely the flat surface PF1 and the curved surfaces CF2 and CF4 (similarly CF3) which are used to outline the flange and side wall respectively. Figure 3 shows an overall view of the part with all features shown. Appendix A shows the detail drawing of the finished product with all geometric specifications.

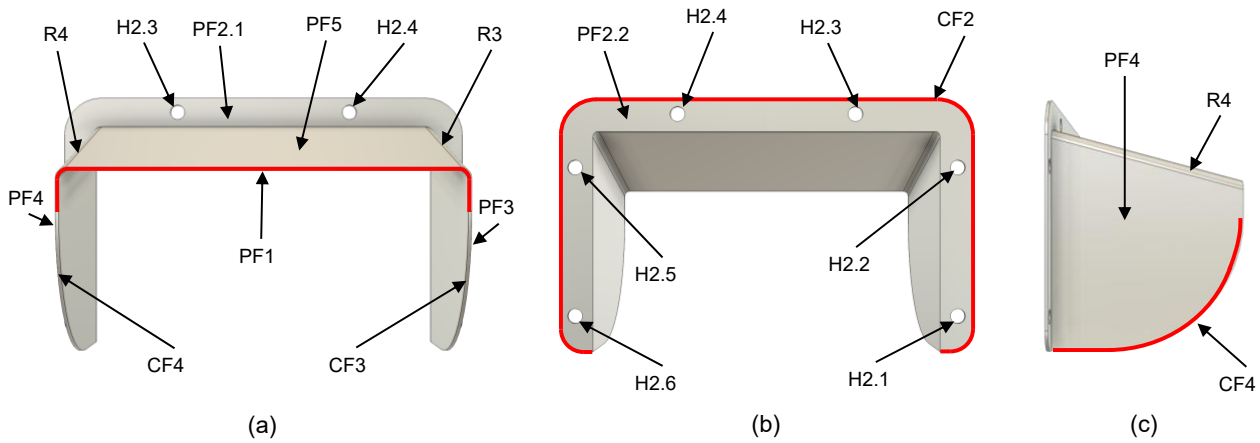

Figure 2. Manufacturing features in front (a), rear (b) and left side (c) views

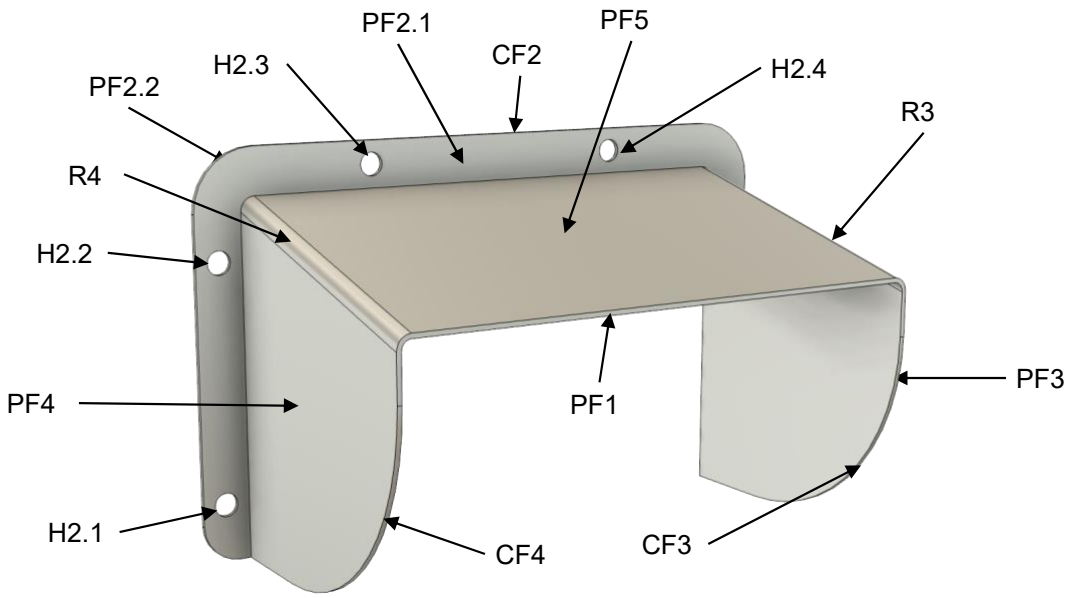

Figure 3. Manufacturing features of the finished product

Figure 4 shows the starting semi-finished product (shown in transparency). It is obtained by welding together two pieces: the protective shell, consisting of the two side walls and the roof (obtained by plastic deformation of a 3 mm thick piece of sheet metal), and the flange (obtained by shearing a 4 mm thick piece of sheet metal). A detailed drawing of the starting semi-finished product can be found in Appendix B.

Figure 4. Starting semi-finished product (Autodesk Fusion 360)

2.2 Machining Workingstep

Before delving into the details of the manufacturing process, it is essential to establish a few key concepts that provide a solid basis for understanding machining steps. Two of these key concepts are the machining directions, i.e. the directions along which the workpiece is machined, and the workpiece reference system. They are depicted in Figure 5.

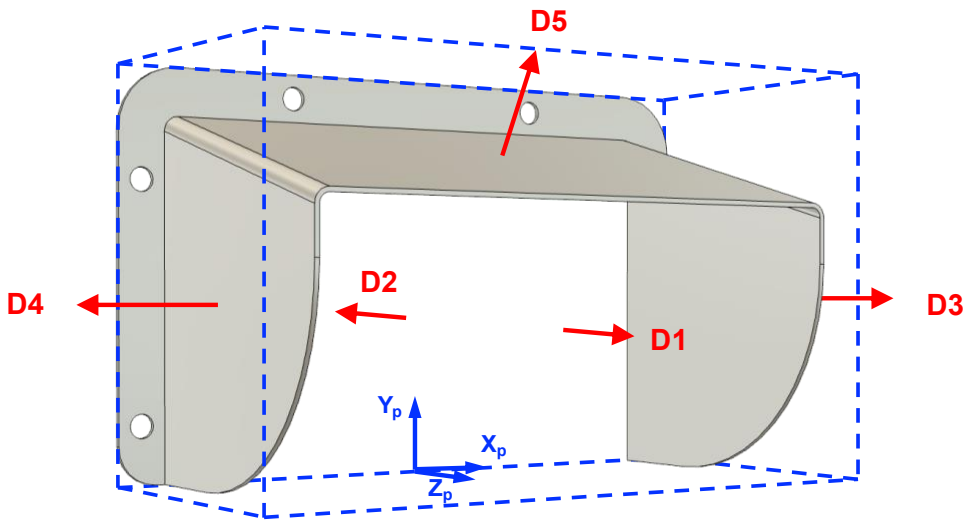

Figure 5. Machining directions and workpiece reference system

The workpiece reference system establishes a reference co-ordinate for the positioning and orientation of the workpiece during machining. As shown in Figure 5, it is set up in such a way that the Y_pZ_p plane coincides with the plane of symmetry of the workpiece, while the X_p axis coincides with the edge of the parallelepiped (139 mm × 85 mm × 66 mm) that circumscribes the workpiece.

Table 2 provides a more detailed explanation of the machining directions.

Table 2. Working directions, code and description

Code	Description
D1	Direction orthogonal to the X_pY_p plane, in the direction of the positive Z_p axis
D2	Same as D1, but opposite direction
D3	Direction orthogonal to the Y_pZ_p plane, in the direction of the positive X_p axis
D4	Same as D3, but opposite direction
D5	Direction orthogonal to the roof of the protective shell

Table 3 shows the machining operations used in the production process.

Table 3. Machining Operations

Code	Machining Operation
FM	Face Milling
C	Contouring
D	Drilling

After defining the geometric features, operations and machining directions, you can refer to Table 4, which lists the machining working steps, i.e. the application of a specific operation to a particular geometric feature. In the same table, information on the tools used is provided, with further explanations available in Table 5. To simulate the production process, Autodesk Fusion 360 software was used, from which the total machining times were also derived, which are shown in the last column of Table 4. Note that the IDs of the machining working steps are structured in such a way that the initial letters indicate the operation, the number immediately following indicates the processing direction, while after the underscore the worked geometric feature is specified.

Table 4. Machining Workingstep

Working step	Operations	Direction	Feature	Tool	Description	Duration
M1_PF1	FM	D1	PF1	T1	Facing of the front wall	00:55
MR4_PF4	FM	D4	PF4	T1	Roughing of the left side wall	01:30
MF4_PF4	FM	D4	PF4	T2	Finishing of the left side wall	03:15
C4_CF4	C	D4	CF4	T2	Contouring of the left side wall	00:09
MR3_PF3	FM	D3	PF3	T1	Roughing of the right side wall	01:29
MF3_PF3	FM	D3	PF3	T2	Finishing of the right side wall	03:14
C3_CF3	C	D3	CF3	T2	Contouring of the right side wall	00:09
MR1_PF2.1	FM	D1	PF2.1	T3	Roughing of the front wall of the flange	01:32
MF1_PF2.1	FM	D1	PF2.1	T6	Finishing of the front wall of the flange	03:58
MR5_PF5	FM	D5	PF5	T1	Roughing of the inclined roof surface	01:46

MF5_PF5	FM	D5	PF5	T2	Finishing of the inclined roof surface	03:10
C5_R4	C	D5	R4	T4	Fillet radius between the left side wall and the shell roof	00:07
C5_R3	C	D5	R3	T4	Fillet radius between the right side wall and the shell roof	00:07
M2_PF2.2	FM	D2	PF2.2	T1	Facing of the rear surface of the flange	01:05
C2_CF2	C	D2	CF2	T1	Contouring of the flange	00:37
D2_H2	D	D2	H2.1 … H2.6	T5	Hole drilling	00:06

** In the IDs of MWS, M denotes a generic facing operation, MR indicates roughing, while MF stands for finishing*

In Appendix C, all machining working steps are analyzed in detail. In particular, in addition to reporting the data already present in Table 4, information on cutting parameters (cutting speed, spindle speed, feed rate) is added, as well as the positioning of the feature and tool reference system relative to the workpiece reference system, as indicated in Figure 5.
As mentioned earlier, Table 5 contains information about the tools. In this case as well, the data has been directly extracted from the Autodesk Fusion 360 library.

Table 5. Tools data

Tool ID	Diameter (mm)	Corner radius (mm)	Flute lenght (mm)	Overall lenght (mm)	Type	Icon
T1	8	/	20	63	Flat end mill	
T2	4	/	14	63	Flat end mill	
T3	6	/	20	150	Flat end mill	
T4	3	3	4	100	Radius mill	
T5	5	/	50	55	Drill	
T6	4	/	20	150	Flat end mill	

2.3 Process Graph and Part Program

Once the machining steps have been listed, the precedence constraints between the various machining operations are analysed using the process graph. Two different workpiece setups are required to perform all machining operations, considering that we have assumed the clamping of the workpiece at the internal surfaces, as they are not to be machined.
Figure 6 shows the process graphs of setup 1 and setup 2, remembering that the red arrows indicate normal precedence constraints while the green arrows dictate that the machining operations connected by them must necessarily be performed in the same setup in order to respect the imposed tolerances. In this case, therefore, this rule is respected. It is important to note that when the piece is positioned in setup 1, it can be processed along directions 1, 3, 4 and 5, while in setup 2 it is processed only along direction 2, which corresponds to the surface on the backside of the flange that will come into contact with the wall.

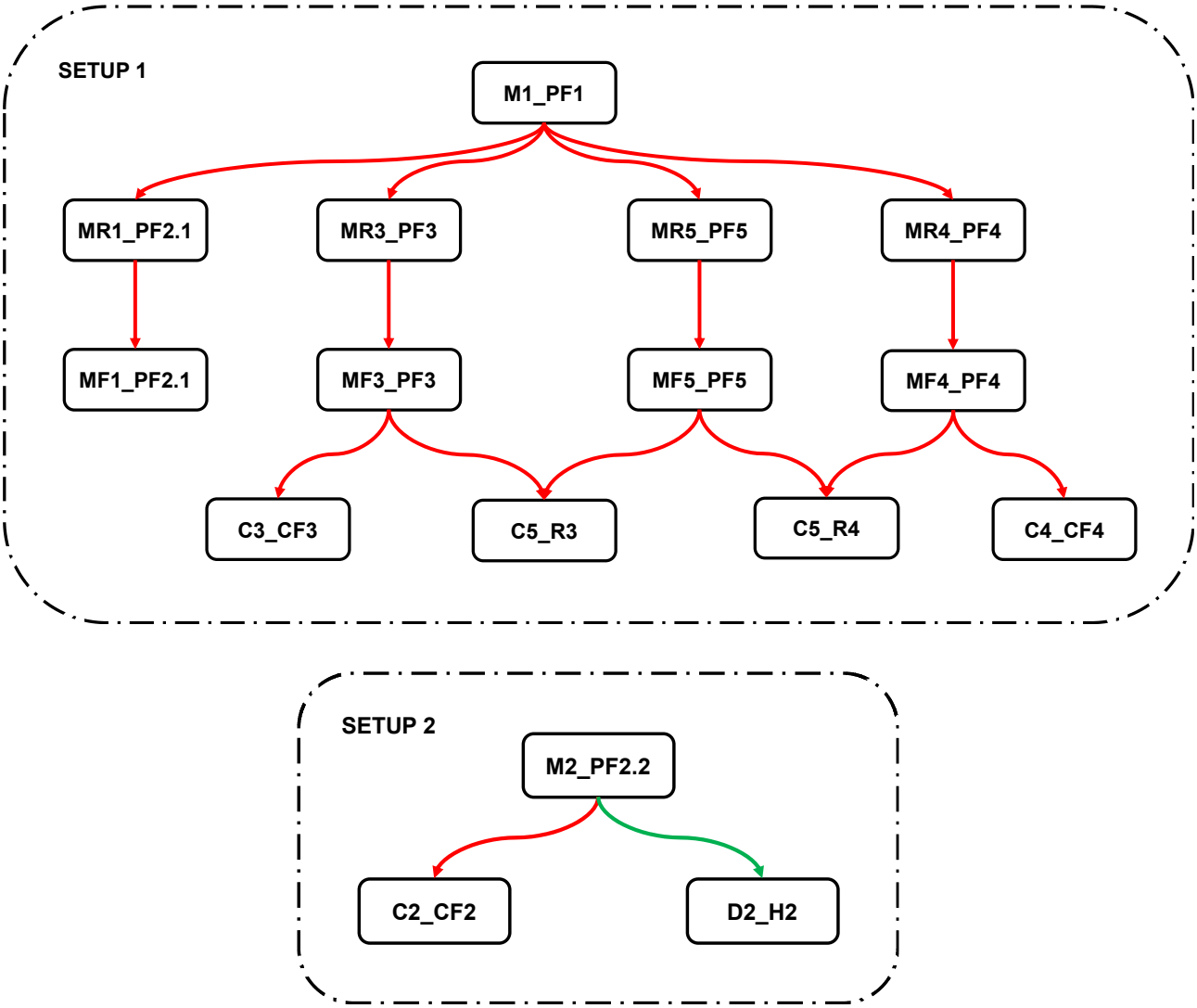

Figure 6. Process graphs of setup 1 and setup 2

A set of part programs can be defined according to the precedence constraints illustrated in Figure 6. For example, the following part programs can be defined for setup 1:

1. M1_PF1 → MR4_PF4 → MF4_PF4 → C4_CF4 → MR3_PF3 → MF3_PF3 → C3_CF3 → MR1_PF2.1 → MF1_PF2.1 → MR5_PF5 → MF5_PF5 → C5_R4 → C5_R3

2. M1_PF1 → MR3_PF3 → MR5_PF5 → MR4_PF4 → MF3_PF3 → MF5_PF5 → MF4_PF4 → C3_CF3 → C4_CF4 → C5_R3 → C5_R4 → MR1_PF2.1 → MF1_PF2.1

3. M1_PF1 → MR1_PF2.1 → MR3_PF3 → MR5_PF5 → MR4_PF4 → MF1_PF2.1 → MF3_PF3 → MF5_PF5 → MF4_PF4 → C3_CF3 → C5_R3 → C5_R4 → C4_CF4

4. M1_PF1 → MR1_PF2.1 → MF1_PF2.1 → MR3_PF3 → MF3_PF3 → MR5_PF5 → MF5_PF5 → MR4_PF4 → MF4_PF4 → C3_CF3 → C4_CF4 → C5_R3 → C5_R4

5. M1_PF1 → MR1_PF2.1 → MF1_PF2.1 → MR3_PF3 → MF3_PF3 → C3_CF3 → MR4_PF4 → MF4_PF4 → C4_CF4 → MR5_PF5 → MF5_PF5 → C5_R3 → C5_R4

Much simpler analysis for setup 2, as the only possible part programs are:

1. M2_PF2.2 → C2_CF2 → D2_H2

2. M2_PF2.2 → D2_H2 → C2_CF2

Figure 7, on the other hand, still presents the process graph of Figure 6 but gives information about the tools used and the machining times for each individual machining workingstep. This graph allows an immediate count of how many tool changes are required for each part program.
Table 6 shows the number of tool changes required for each part program in setup 1. For setup 2, on the other hand, these can be quantified immediately, and are equal to 1 in the first part program and 2 in the second.

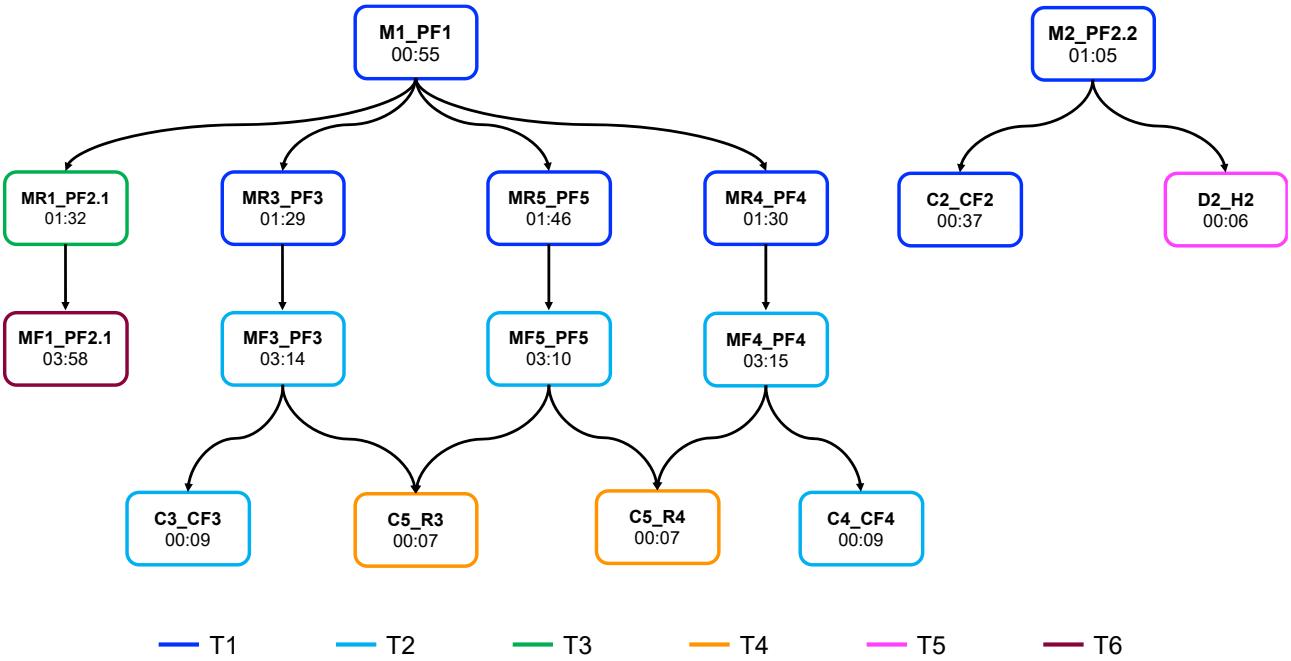

Figure 7. Process graphs for setup 1 and setup 2 with tool and machining duration

Table 6. Tool change count for setup 1 part programs

Part Program	Tool changes
1	8
2	4
3	6
4	9
5	9

As indicated in Table 6, the second part program is formulated in such a way as to minimize tool changes. Upon closer analysis, it can be observed that there are additional sequences of operations that result in the same number of tool changes. The part program 2 for setup 1 is presented again:

2. M1_PF1 → **(MR3_PF3 → MR5_PF5 → MR4_PF4)** → **(MF3_PF3 → MF5_PF5 → MF4_PF4)** → **(C3_CF3 → C4_CF4)** → **(C5_R3 → C5_R4)** → MR1_PF2.1 → MF1_PF2.1

The arrows highlighted in red indicate the points at which a tool change is required. Operations enclosed in parentheses, on the other hand, can be performed in different combinations than those written without violating precedence constraints and without increasing the number of tool changes. This allows for the generation of multiple part programs, each still requiring four tool changes.
Regarding the tool usage time throughout the entire production process, Table 7 illustrates how many operations can be performed and for how long the work can continue if a tool is missing from the machine, considering operations from both setups.

Table 7. Autonomy of operations in case a tool is missing

Tool	Operations	Time
T1	0	00:00
T2	9	12:58
T3	14	17:39
T4	14	22:55
T5	15	23:03
T6	15	19:11

As can be observed, Tool 1 is the most crucial because the operations referencing both setups specifically use this tool. Therefore, if it is not available, no work can be performed. On the other hand, tools T4 and T5 provide a longer autonomy in terms of machining time in the event of their absence.

3. MACHINE AND PALLET CONFIGURATION

The machine used for the previously described operations is the 5-axis HAAS UMC-750. Quoting a description provided by the supplier, the UMC-750 features a two-axis tilting rotary table with a 500 mm diameter plate, ensuring a tilt range of +120° to -35° and a 360° rotation to provide excellent tool clearance and the ability to work with large workpieces. Figure 8 provides a representation of the machine.

Figure 8. HAAS UMC-750 (Autodesk Fusion 360)

Table 8 presents the machine data necessary for sizing the pallet, and for further details, you can refer to the technical data sheet provided by the manufacturer in the file *HAAS_UMC750_tds*.

Table 8. Machine specifications (HAAS UMC-750)

Travels	**Metric (mm)**
X Axis	762
Y Axis	508
Z Axis	508
Spindle Nose to Platter (max)	610
Spindle Nose to Platter (min)	102

Figure 9 shows the pallet representation, with a detailed drawing available in Appendix D.

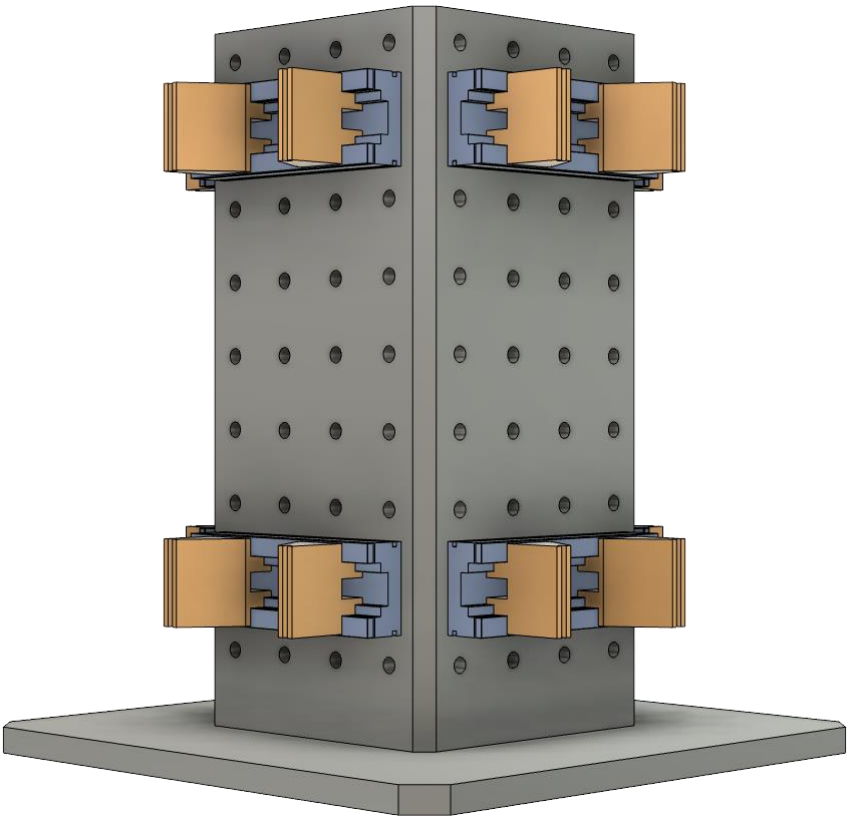

Figure 9. Pallet (Autodesk Fusion 360)

The designed pallet has a compact volume of 40 × 40 × 46 cm³, making it perfectly compatible with the machine constraints. As evident, it can accommodate 2 workpieces per face, totaling 8 pieces. Additionally, there are embedded clamps on support bases, ensuring a secure grip on the workpiece during processing.

As previously mentioned, when discussing machining workingsteps, the workpiece requires two setups for production. Setup 1 will be applied to the four upper pieces because among the available machining directions (i.e., D1, D3, D4, D5), direction 5 requires a 105° inclination relative to the vertical axis of the pallet. This prevents interference issues between the spindle and the workpiece, as there is nothing above the piece to obstruct the tool path. On the other hand, Setup 2 will be configured for the four lower pieces, as the only machining direction present is D2, which is orthogonal to the pallet's face. All of this information is depicted in Figure 10, illustrating how the

pallet appears with the pieces loaded each time the cobot finishes configuring the pallet in the LU station before being sent into the machines for processing. As observed, the pieces are consistently clamped to the pallet using the internal surfaces of the shell, as they enter the production process already in the shape required for the finished product.

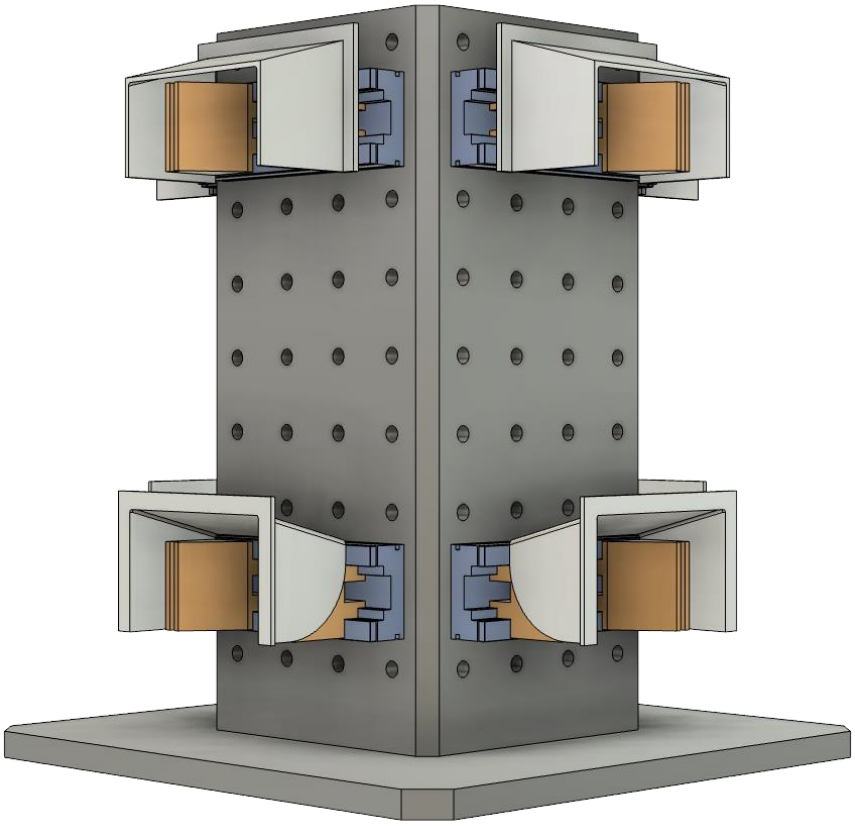

Figure 10. Pallet loaded with workpieces (Autodesk Fusion 360)

4. LU STATION

In the Load-Unload (LU) station, a collaborative robot (cobot) is used to configure the pallet. When the pallet arrives at the LU station after processing, it has four pieces on top that have only completed the setup 1 operations, and four pieces at the bottom that have completed all the operations and can be removed. Therefore, the movements that the cobot needs to perform to configure the pallet before it is reinserted into the machine are:

1. Remove the four bottom pieces positioned in setup 2 that have completed all the operations and are therefore finished products.
2. Move the four top pieces from top to bottom, placing them in setup 2.
3. Insert four raw pieces at the top, placing them in setup 1.

Figure 11 illustrates the pallet's condition upon arrival at the LU station (a) and how it appears after the cobot has completed the configuration (b), just before being reintroduced into the machine.

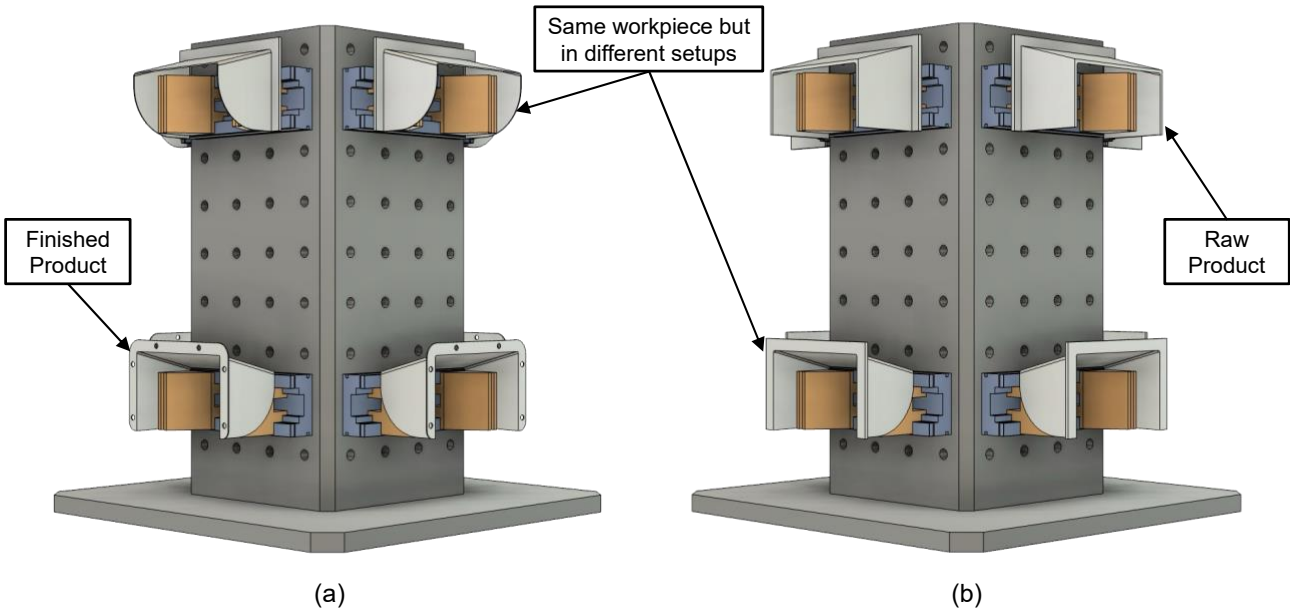

Figure 11. Pallet upon arrival at the LU station (a) and after the cobot configuration (b)

As can be observed, the lower pieces in (a) are the finished products, the upper pieces in (b) are raw materials that still need to be processed, while the lower pieces in (b) are the upper pieces in (a) that have simply been placed in the second setup.

4.1 Webots Simulation

The operations described earlier have been simulated using the Webots software, which provides an advanced simulation environment for robots. Figure 12 shows a screenshot of the environment created to simulate the pallet configuration process.

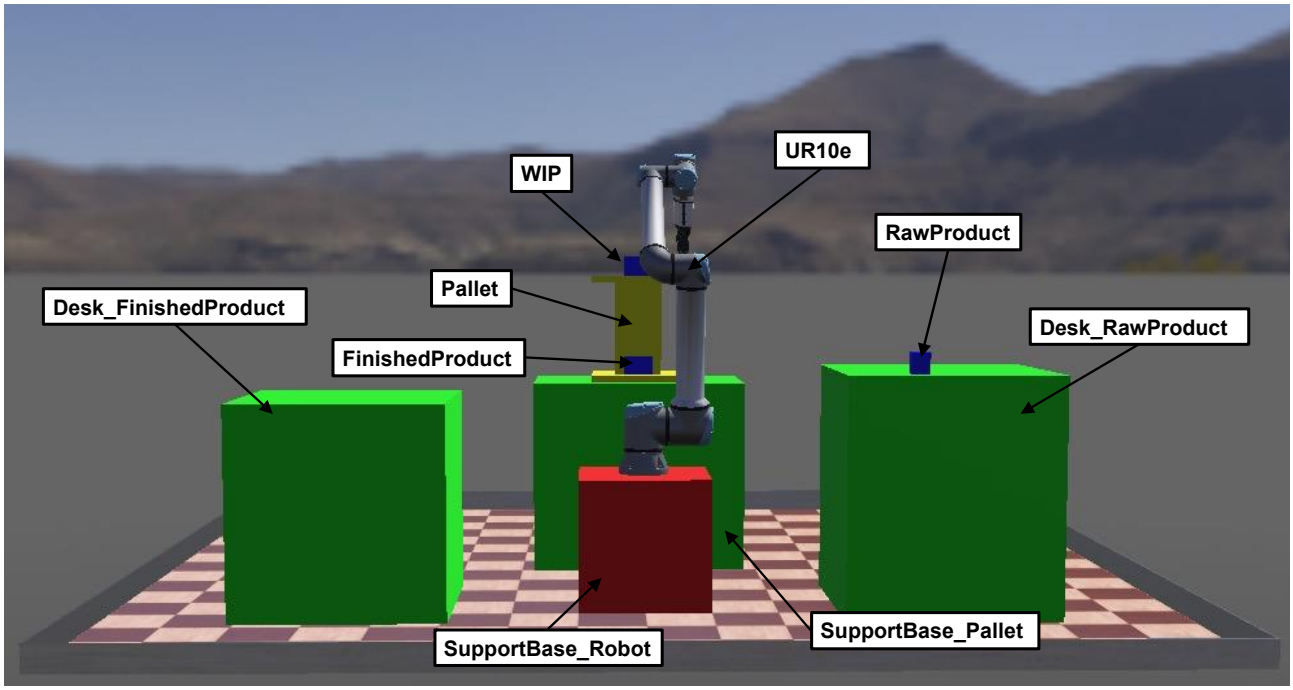

Figure 12. Simulation environment for the pallet configuration process in Webots

As can be observed, the chosen cobot for the production system is the UR10e, positioned in the center of the system and supported by a base to increase its distance from the ground. On either side of the cobot, there are two cubes representing the points where finished products are to be placed and where raw products are to be picked up. In front of the cobot, there is a support base with a pallet placed on it. On the pallet, the semi-finished product is located at the top, ideally positioned in setup 1, while at the bottom, there is the finished product, ideally placed in setup 2. In practice, this figure depicts the pallet as it arrives at the LU station before the cobot configures it, similar to what was shown in Figure 11 (a). To the right of the cobot, there is the raw piece that will be placed on the pallet later.
Figure 13 presents four snapshots summarizing the activities performed by the cobot to configure the pallet. The four steps are briefly described:

1. The pallet arrives at the LU station, as shown in Figure 11 (a). Essentially, it is the same screenshot as in Figure 12 but depicted from a different perspective.
2. The cobot has moved the finished product from the pallet to the designated desk.
3. The cobot has transferred the piece from setup 1 to setup 2.
4. The cobot has loaded the raw product onto the pallet, completing the pallet configuration. The pallet is now in the state depicted in Figure 11 (b).

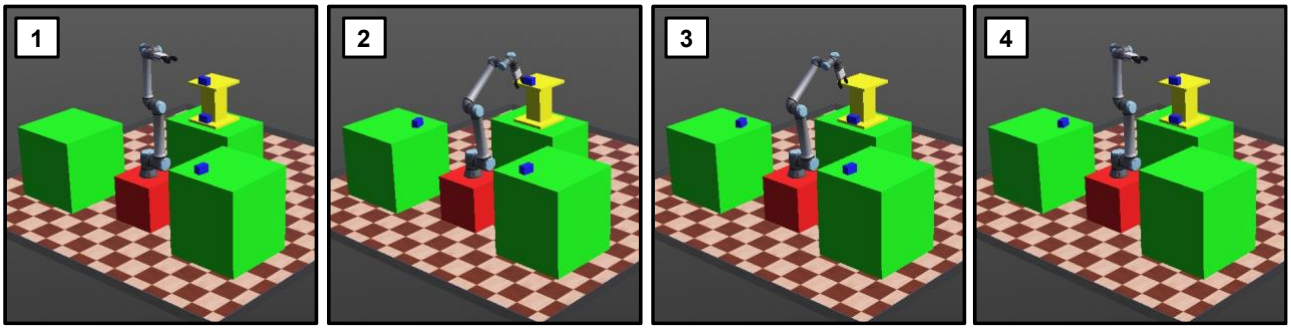

Figure 13. Four summary snaphots of the pallet configuration process simulated in Webots

Within the *Webots* folder, you'll find the Webots project containing the virtual environment and the Python controller used to simulate the pallet configuration process described earlier. In the spreadsheet named *Cobot_configuration* within the Excel file *Project_Work*, there's a detailed table listing all configurations assumed by the cobot along the simulated path. This table provides information such as the adopted speed, gripper status, and includes brief descriptions for each configuration.
Furthermore, the video file named *Cobot_station_simulation* presents a visual playback of the simulated pallet configuration process in Webots.

5. FMS SYSTEM CONFIGURATION

As previously mentioned in the introductory chapter, the primary objective of this report is to size the FMS production system to meet the customer's demand of 18 parts per hour. Up to this point, we

have examined the activities carried out in the LU Station, focusing on the pallet configuration by the cobot, and the necessary machining workingsteps to transform the raw piece into the finished product. Figure 14 illustrates the relationship between these two activities, graphically representing the eight phases that occur cyclically during the production process. It is important to note that, in addition to the resources and activities previously analyzed in the chapters regarding the cobot and machining operations, an AGV is also introduced. This AGV plays a crucial role in the autonomous and efficient transfer of pallets between the LU Station and the various machines.

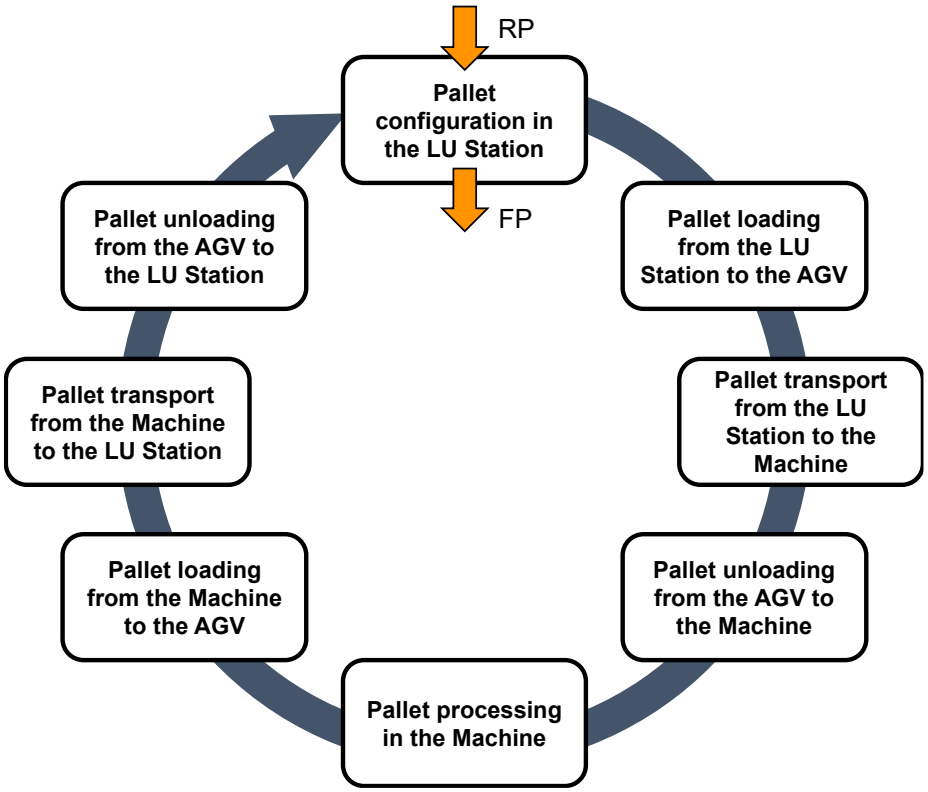

Figure 14. Phases in the production cycle

To configure the entire system, it is necessary to calculate the processing times for the three resources used, namely the machine, the cobot, and the AGV.
Starting with the cobot, its movement times have been calculated through simulation in Webots. As evident from the video *Cobot_station_simulation*, which provides a visual representation of the pallet configuration process, it takes 2,1 minutes to configure a single face of the pallet. Since the pallet has four faces, on which the same operation must be repeated, the total time for pallet configuration in the LU Station can be quickly calculated by multiplying the previous figure by four:

- **Pallet Configuration Time = 8,4 min.**

As for the machine operations, it is assumed that the machine executes the following part program:

1. M1_PF1 → MR3_PF3 → MR5_PF5 → MR4_PF4 → M2_PF2.2 → C2_CF2 → D2_H2 → MF3_PF3 → MF5_PF5 → MF4_PF4 → C3_CF3 → C4_CF4 → C5_R3 → C5_R4 → MR1_PF2.1 → MF1_PF2.1

Note that this part program, which includes all 16 operations of both the first and second setups, is nothing more than a part program of setup 1 with the minimum tool change (analyzed in Chapter

2.3), to which the three operations of setup 2 have been nested in order to minimize the overall tool changes. In blue, indeed, the 13 operations of setup 1 to be performed on the workpiece at the top of the pallet have been highlighted. In green, the 3 operations of setup 2 to be performed on the workpiece at the base of the pallet have been highlighted, while the red arrows indicate the need for tool changes.
Therefore, i) considering that the sum of the durations of the machining workingsteps is equal to 23,15 minutes; ii) assuming a shuttle rotation time in the machine of 6 seconds to be repeated four times, corresponding to the number of faces on the pallet; iii) considering a tool change time of 15 seconds (data obtained from the production process simulation using Autodesk Fusion 360) for a total of 5 tool changes, it follows that:

- **Pallet Processing Time in the Machine = 24,8 min.**

Finally, the calculation of the pallet transport time on the AGV remains. First, we assume a loading or unloading time for the pallet from the AGV of 15 seconds, which must be multiplied by 4 because these activities are repeated 4 times in a production cycle, as easily seen in Figure 14. To complete the calculation, it is necessary to define the layout of the production system: we assume placing the LU station at the center of the system, separating the machines from it and from each other by 5 meters. In this way, considering that the AGV travels at a speed of 15 m/min, it is possible to calculate the time the pallet spends in motion by dividing the average distance the AGV must cover between the LU station and the machines by the just-defined speed.
The inconvenience lies in the fact that this same average distance in the system is a parameter that, in turn, depends on an unknown in the problem, namely the number of machines present. Therefore, the *FMS_configuration* spreadsheet in the Excel file *Project_Work* contains a formula capable of automatically calculating the average distance that the AGV must cover relative to the LU station, updating it whenever the number of machines in the system is modified. Considering two machines arranged at 5 meters from the LU station, the average distance that the AGV must cover is 5 meters. Therefore, by dividing this factor by 15 m/min and adding to the result the contribution related to the loading and unloading of the pallet from the AGV, as discussed earlier, we have:

- **Pallet Transport Time = 1,67 min.**

Given these parameters, it is possible to calculate the productivity for each of these resources expressed in pallets per hour. By doing so, you can then determine the system productivity by identifying the resource with the lowest productivity. Once this resource is identified, the only operation left to do is to add as many resources as needed to meet the customer demand.
These calculations described in words are reported in a systematic and automated manner in the *FMS_Configuration* spreadsheet in the Excel file *Project_Work*. Therefore, the configuration that allows the customer's demand to be met, while also offering one unit more productivity than required, is:

- **2 MACHINES**
- **1 COBOT**
- **1 AGV**

Note that in the spreadsheet, in order to switch from system productivity expressed in pallets/h to productivity expressed in parts/h, we have multiplied the former not by 8, i.e. the number of total parts contained in a pallet, but by 4, because 4 are the finished products that are produced at each

production cycle. This is because 4/8 of the parts in the pallet at each cycle simply change setup (from setup 1 to setup 2) to finish all the machining.
Figure 15 shows a diagram of the newly configured production system.

Figure 15. Representative scheme of the FMS

6. PRODUCT MODIFICATIONS AND IMPACT ON THE PRODUCTION PROCESS

Another type of socket plate used in buildings, which requires a protective shell similar to the one just described, is the BTicino Magic 505/5. Unlike the 503/3 for which the shell was designed, the 505/5 consists of 5 modules instead of 3, and consequently has a longer length. Therefore, the shell designed for the previous variant is clearly not compatible with this new model, necessitating a shell with a suitable length for the 505/5 plate as well. Figure 16 shows how the new shell should be, and its detailed design can be found in Appendix E. In Appendix F, the detailed design of the semi-finished product from which the finished product is derived is provided.

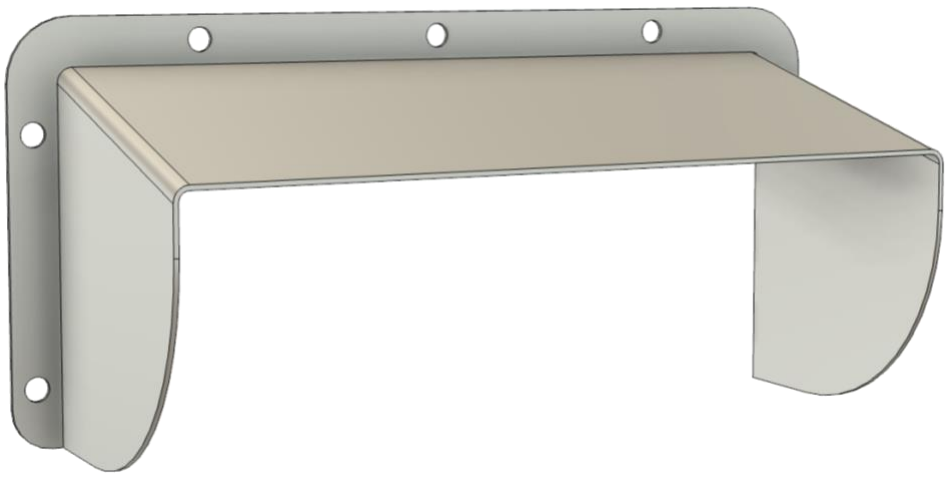

Figure 16. Modified protective shell for BTicino Magic 505/5 electrical sockets

Regarding the production process and the modifications needed to create this new variant of the shell, the system just designed allows for extreme flexibility in adapting to different market demands. As can be observed, the product's appearance remains the same as that of the shell intended for the 503/3 plates. Therefore, even though some dimensions have increased compared to before, the geometric features necessary to describe the part remain unchanged, except for the central hole on the flange at the vertical symmetry plane of the part, which was not present before. Since the features remain the same and the operations to be applied to them for processing the product are also the

same, the same table of machining workingsteps presented for the 503/3 plate shell (Table 4) can be replicated for this shell.
What will differ between the two are some processing duration values, which will clearly be higher in this case because the working surface has increased. Table 9, therefore, presents the machining workingsteps for the 505/5 plate shell. Again, the processing duration values were obtained from the production process simulation carried out using Autodesk Fusion 360.

Table 9. Machining Workingstep of the modified product

Working step	Operations	Direction	Feature	Tool	Description	Duration
M1_PF1	FM	D1	PF1	T1	Facing of the front wall	01:00
MR4_PF4	FM	D4	PF4	T1	Roughing of the left side wall	01:30
MF4_PF4	FM	D4	PF4	T2	Finishing of the left side wall	03:15
C4_CF4	C	D4	CF4	T2	Contouring of the left side wall	00:09
MR3_PF3	FM	D3	PF3	T1	Roughing of the right side wall	01:29
MF3_PF3	FM	D3	PF3	T2	Finishing of the right side wall	03:14
C3_CF3	C	D3	CF3	T2	Contouring of the right side wall	00:09
MR1_PF2.1	FM	D1	PF2.1	T3	Roughing of the front wall of the flange	01:40
MF1_PF2.1	FM	D1	PF2.1	T6	Finishing of the front wall of the flange	04:16
MR5_PF5	FM	D5	PF5	T1	Roughing of the inclined roof surface	02:22
MF5_PF5	FM	D5	PF5	T2	Finishing of the inclined roof surface	04:19
C5_R4	C	D5	R4	T4	Fillet radius between the left side wall and the shell roof	00:07
C5_R3	C	D5	R3	T4	Fillet radius between the right side wall and the shell roof	00:07
M2_PF2.2	FM	D2	PF2.2	T1	Facing of the rear surface of the flange	01:13
C2_CF2	C	D2	CF2	T1	Contouring of the flange	00:43
D2_H2	D	D2	H2.1 … H2.7	T5	Hole drilling	00:07

Note that the processing times that have increased compared to Table 4 have been highlighted in red. Whereas the total processing time for the previous shell variant was 23,15 minutes, it has now increased to 25,7 minutes. This indicates a percentage change of +11% in processing times.
In this case as well, it will be necessary to carry out two setups to machine the part, following the same procedure as before, and the pallet setup time is also the same as before at 8,4 minutes. The modification required mainly concerns the pallet, which must be slightly wider to accommodate the new shell. The side size of the previous pallet was 18 cm, but this measurement is no longer compatible since the new shell has a length of 18,5 cm on the long side. There are no problems with the chosen machine because, once a slightly larger pallet than the previous one has been found, the machine has much higher travels along the X, Y and Z axes than the values that are currently in play. However, the configuration of the production system, assuming an equal demand for shells for

the 503/3 plates of 18 part/h, presents a different result from the one obtained previously and requires one more machine than the two required for the previous shell. This is because, keeping all other processing times of the cobot and AGV unchanged, the 11% increase in processing time affects the production system to such an extent that it requires the addition of a machine to the production system.

The calculations were again carried out using the *FMS_Configuration* spreadsheet, replacing the new value of 'Pallet Part-program: operation time' of 25,7 minutes. With a configuration of 2 machines, 1 cobot and 1 AGV, the system would meet a demand of 17 part/h, which would be insufficient. By adding one machine instead, which is the limiting resource as it is the least productive, the productivity of the system even rises to 26 part/h.

APPENDIX A
Technical drawing of the finished product

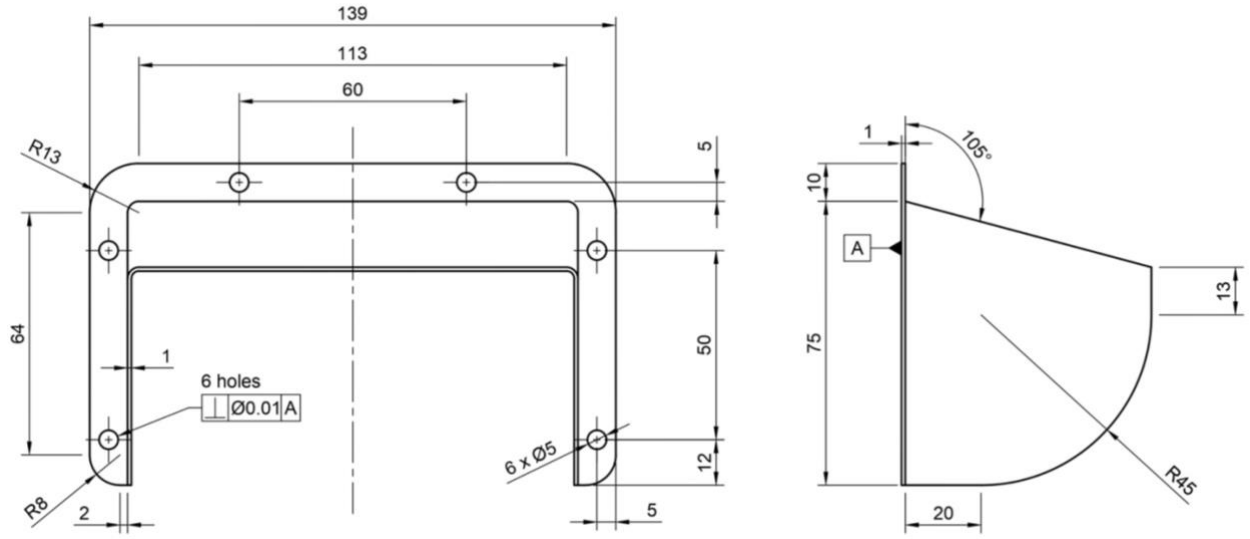

[Tolerance specifies that the hole axes must fall within a cylindrical zone with a diameter of 0.01 mm, and the axis should be perpendicular to reference surface A]

APPENDIX B
Technical drawing of the semi-finished product

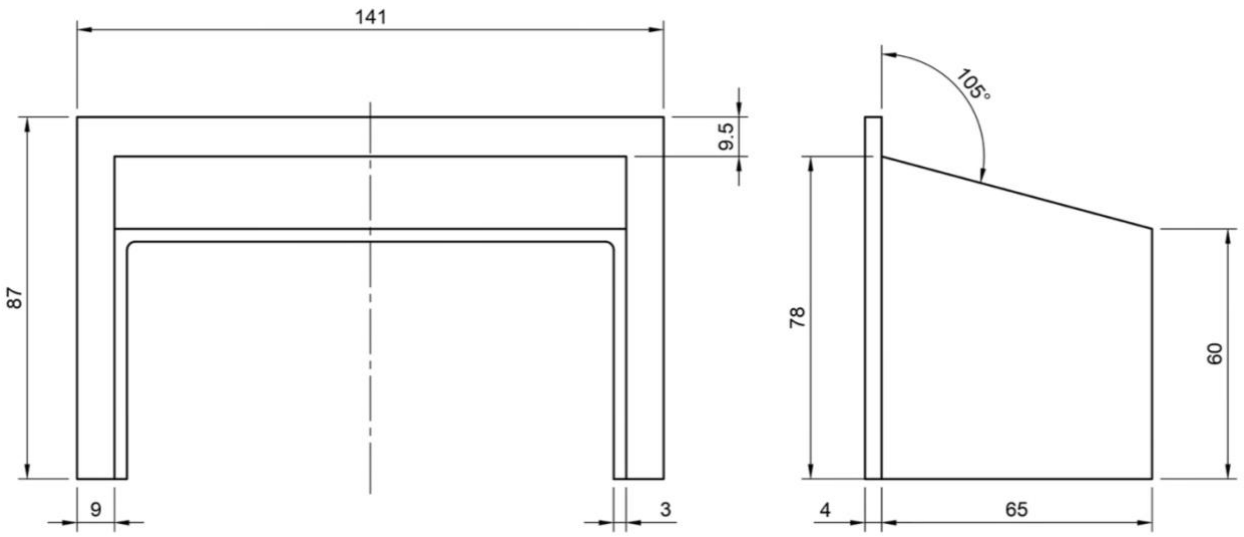

APPENDIX C
Machining Workingstep

Here is the representation of the finished product, indicating the Working Directions and the Reference System of the Part. The 'Position of the reference system' table section indicates the displacement along X, Y, and Z (in mm) and the rotation along the A, B, C axes of the Feature and Tool Reference System in relation to the Part Reference System.

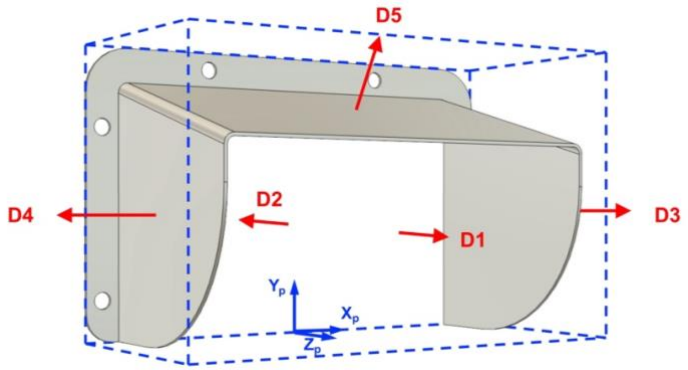

Machining Workingstep: M1_PF1	
Feature: Planar Face PF1	**Tool:** Flat end mill T1
Operation: Face Milling	**Duration:** 00:55
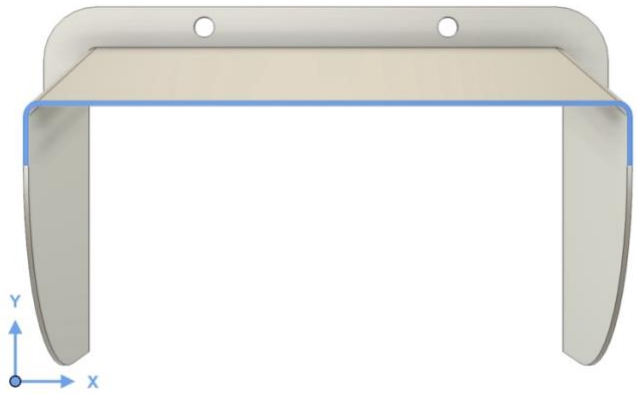	**Direction:** D1 **Cutting parameters** Vt = 126 m/min n = 5000 rpm Va = 1000 mm/min **Position of the reference system** X = -70.5 ANG X = 0° Y = 0 ANG Y = 0° Z = 68 ANG Z = 0° Facing of the front wall (o.a. = 2 mm)

Machining Workingstep: MR4_PF4	
Feature: Planar Face PF4	**Tool:** Flat end mill T1
Operation: Face Milling	**Duration:** 01:30
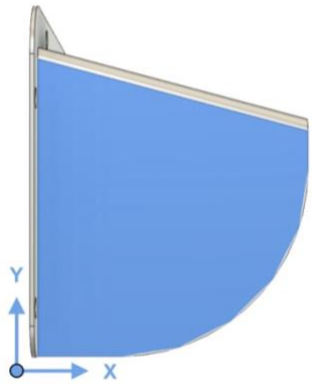	**Direction:** D4 **Cutting parameters** Vt = 126 m/min n = 5000 rpm Va = 1000 mm/min **Position of the reference system** X = -70.5 ANG X = 0° Y = 0 ANG Y = -90° Z = -1 ANG Z = 0° Roughing of the left side wall (o.a. = 1,5 mm)

Machining Workingstep: MR4_PF4	
Feature: Planar Face PF4	**Tool:** Flat end mill T2
Operation: Face Milling	**Duration:** 03:15
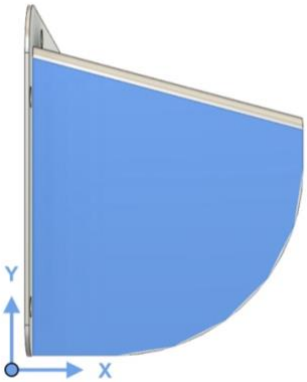	**Direction:** D4 **Cutting parameters** Vt = 300 m/min n = 23939 rpm Va = 1000 mm/min **Position of the reference system** X = -70.5 ANG X = 0° Y = 0 ANG Y = -90° Z = -1 ANG Z = 0° Finishing of the left side wall (o.a. = 0,5 mm)

Machining Workingstep: C4_CF4	
Feature: Curved Face CF4	**Tool:** Flat end mill T2
Operation: Contouring	**Duration:** 00:09
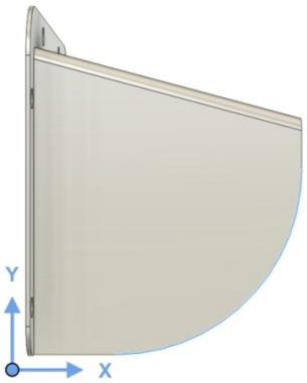	**Direction:** D4 **Cutting parameters** Vt = 126 m/min n = 10000 rpm Va = 1000 mm/min **Position of the reference system** X = -70.5 ANG X = 0° Y = 0 ANG Y = -90° Z = -1 ANG Z = 0° Contouring of the left side wall

Machining Workingstep: MR3_PF3	
Feature: Planar Face PF3	**Tool:** Flat end mill T1
Operation: Face Milling	**Duration:** 01:29
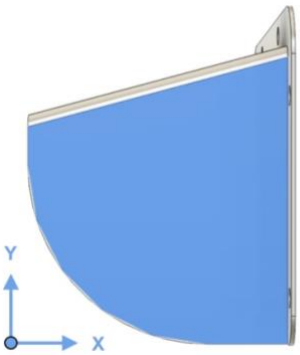	**Direction:** D3 **Cutting parameters** Vt = 126 m/min n = 5000 rpm Va = 1000 mm/min **Position of the reference system** X = 70.5 ANG X = 0° Y = 0 ANG Y = 90° Z = 68 ANG Z = 0° Roughing of the right side wall (o.a. = 1,5 mm)

Machining Workingstep: MF3_PF3	
Feature: Planar Face PF3	**Tool:** Flat end mill T2
Operation: Face Milling	**Duration:** 03:14
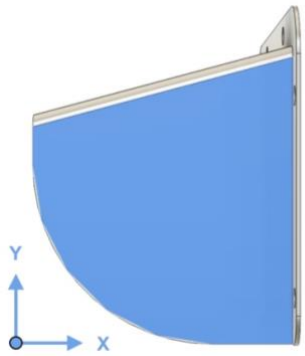	**Direction:** D3 **Cutting parameters** Vt = 300 m/min n = 23929 rpm Va = 1000 mm/min **Position of the reference system** X = 70.5 ANG X = 0° Y = 0 ANG Y = 90° Z = 68 ANG Z = 0° Finishing of the right side wall (o.a. = 0,5 mm)

Machining Workingstep: C3_CF3	
Feature: Curved Face CF3	**Tool:** Flat end mill T2
Operation: Contouring	**Duration:** 00:09
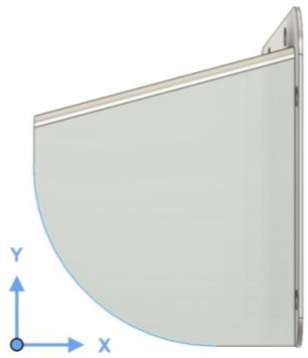	**Direction:** D3 **Cutting parameters** Vt = 126 m/min n = 10000 rpm Va = 1000 mm/min **Position of the reference system** X = 70.5 ANG X = 0° Y = 0 ANG Y = 90° Z = 68 ANG Z = 0° Contouring of the right side wall

Machining Workingstep: MR1_PF2.1	
Feature: Planar Face PF2.1	**Tool:** Flat end mill T3
Operation: Face Milling	**Duration:** 01:32
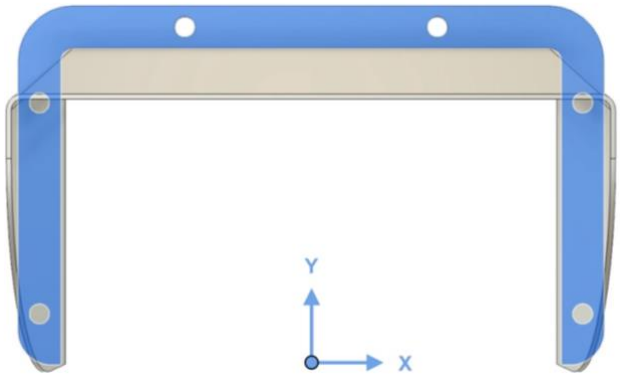	**Direction:** D1 **Cutting parameters** Vt = 126 m/min n = 6666 rpm Va = 1000 mm/min **Position of the reference system** X = 0 ANG X = 0° Y = 0 ANG Y = 0° Z = 0 ANG Z = 0° Roughing of the front wall of the flange (o.a. = 1,5 mm)

Machining Workingstep: MF1_PF2.1	
Feature: Planar Face PF2.1	**Tool:** Flat end mill T6
Operation: Face Milling	**Duration:** 03:58
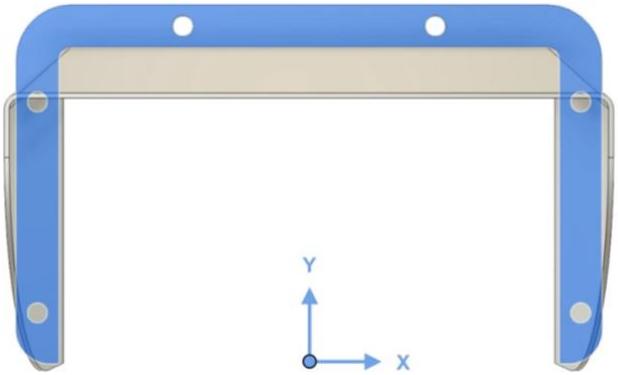	**Direction:** D1 **Cutting parameters** Vt = 300 m/min n = 23939 rpm Va = 1000 mm/min **Position of the reference system** X = 0 ANG X = 0° Y = 0 ANG Y = 0° Z = 0 ANG Z = 0° Finishing of the front wall of the flange (o.a. = 0,5 mm)

Machining Workingstep: MR5_PF5	
Feature: Planar Face PF5	**Tool:** Flat end mill T1
Operation: Face Milling	**Duration:** 01:46
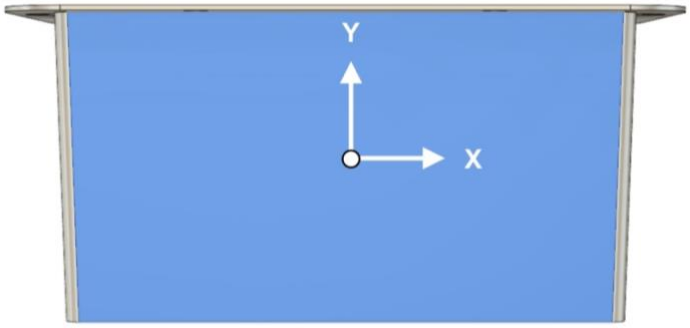	**Direction:** D5 **Cutting parameters** Vt = 126 m/min n = 5000 rpm Va = 1000 mm/min **Position of the reference system** X = 0 ANG X = -75° Y = 87 ANG Y = 0° Z = 33.5 ANG Z = 0° Roughing of the inclined roof surface (o.a. = 1,5 mm)

Machining Workingstep: MF5_PF5	
Feature: Planar Face PF5	**Tool:** Flat end mill T2
Operation: Face Milling	**Duration:** 03:10
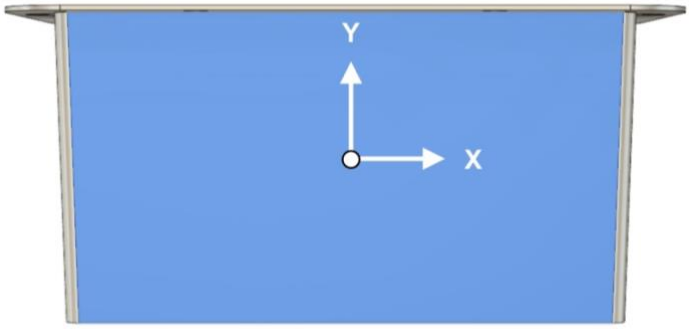	**Direction:** D5 **Cutting parameters** Vt = 300 m/min n = 23939 rpm Va = 1000 mm/min **Position of the reference system** X = 0 ANG X = -75° Y = 87 ANG Y = 0° Z = 33.5 ANG Z = 0° Finishing of the inclined roof surface (o.a. = 0,5 mm)

Machining Workingstep: C5_R4	
Feature: Fillet Radius R4	**Tool:** Radius Mill T4
Operation: Contouring	**Duration:** 00:07
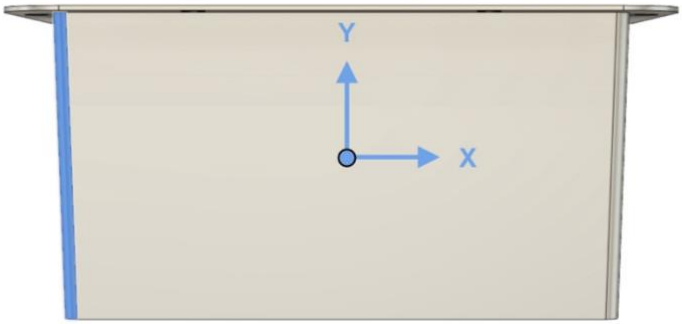	**Direction:** D5 **Cutting parameters** Vt = 47 m/min n = 5000 rpm Va = 1000 mm/min **Position of the reference system** X = 0 ANG X = -75° Y = 87 ANG Y = 0° Z = 33.5 ANG Z = 0° Fillet radius between the left side wall and the shell roof

Machining Workingstep: C5_R3	
Feature: Fillet Radius R3	**Tool:** Radius Mill T4
Operation: Contouring	**Duration:** 00:07
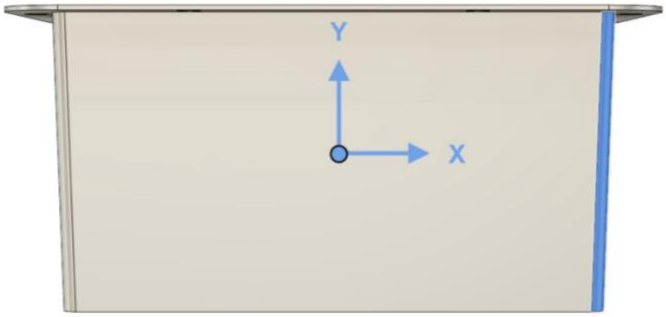	**Direction:** D5 **Cutting parameters** Vt = 47 m/min n = 5000 rpm Va = 1000 mm/min **Position of the reference system** X = 0 ANG X = -75° Y = 87 ANG Y = 0° Z = 33.5 ANG Z = 0° Fillet radius between the right side wall and the shell roof

Machining Workingstep: M2_PF2.2	
Feature: Planar Face PF2.2	**Tool:** Flat end mill T1
Operation: Face Milling	**Duration:** 01:05
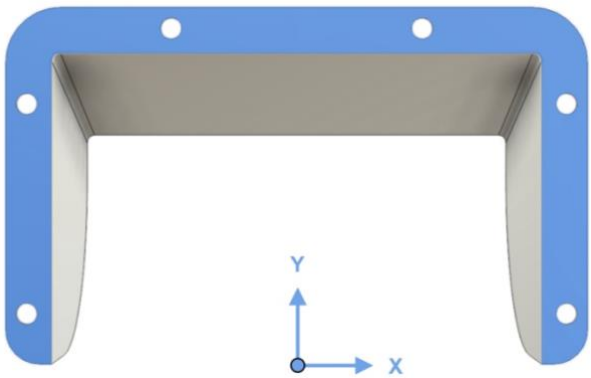	**Direction:** D2 **Cutting parameters** Vt = 126 m/min n = 5000 rpm Va = 1000 mm/min **Position of the reference system** X = 0 ANG X = 0° Y = 0 ANG Y = 180° Z = -1 ANG Z = 0° Facing of the rear surface of the flange (o.a. = 1 mm)

Machining Workingstep: C2_CF2	
Feature: Curved Face CF2	**Tool:** Flat end mill T1
Operation: Contouring	**Duration:** 00:37
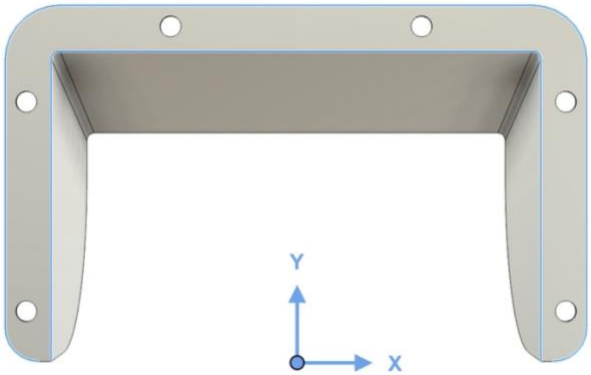	**Direction:** D2 **Cutting parameters** Vt = 126 m/min n = 5000 rpm Va = 1000 mm/min **Position of the reference system** X = 0 ANG X = 0 Y = 0 ANG Y = 180° Z = -1 ANG Z = 0 Contouring of the flange

Machining Workingstep: D2_H2	
Feature: Hole H2.1 H2.2 … H2.6	**Tool:** Drill T5
Operation: Drilling	**Duration:** 00:06
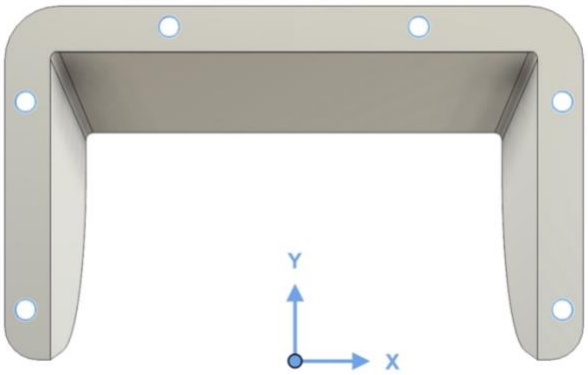	**Direction:** D2 **Cutting parameters** Vt = 79 m/min n = 5000 rpm Va = 1000 mm/min **Position of the reference system** X = 0 ANG X = 0 Y = 0 ANG Y = 180° Z = -1 ANG Z = 0 Hole drilling

APPENDIX D
Technical drawing of the pallet

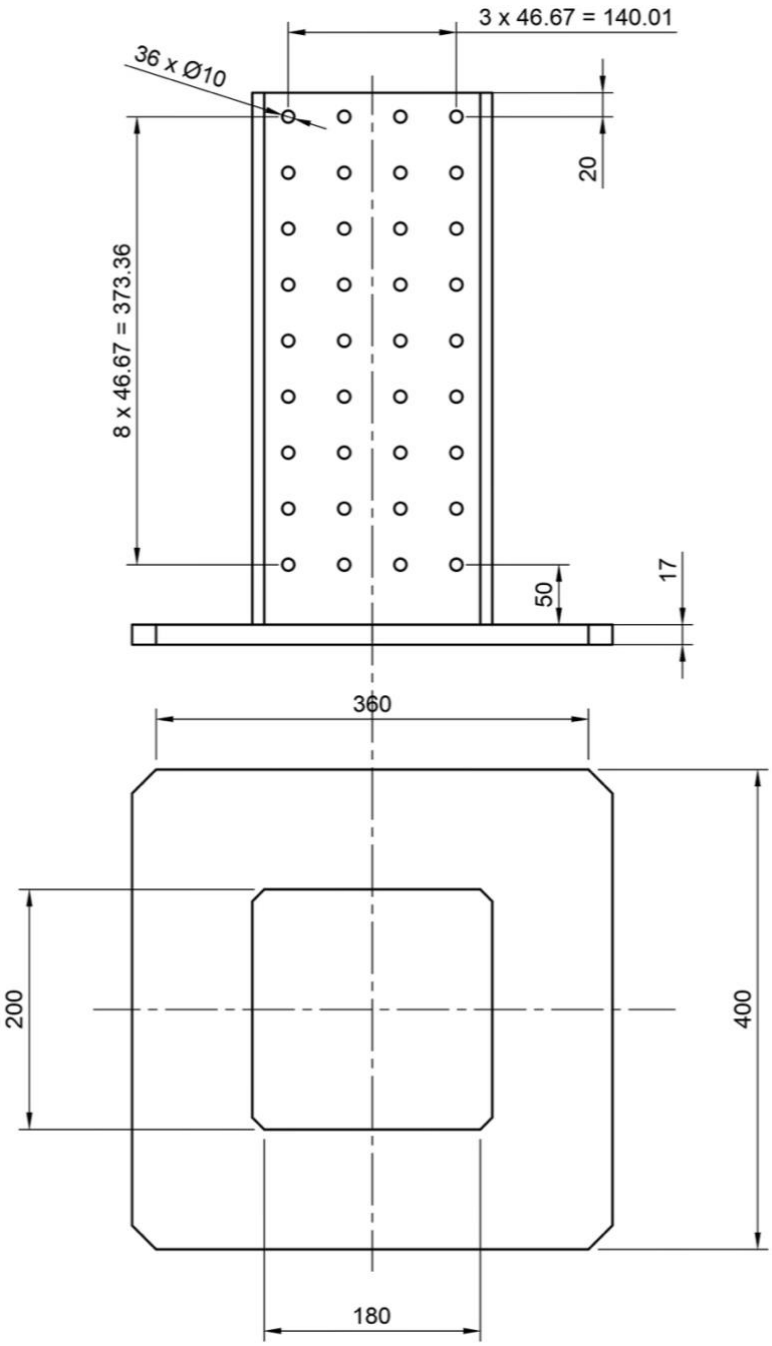

APPENDIX E
Technical drawing of the finished product with modifications

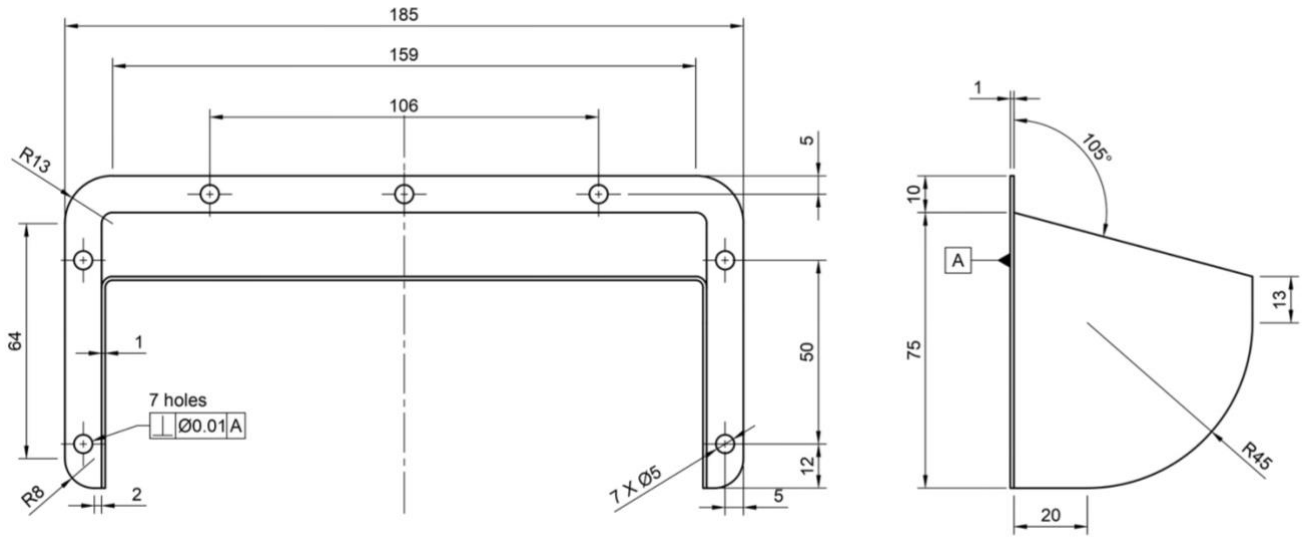

[Tolerance specifies that the hole axes must fall within a cylindrical zone with a diameter of 0.01 mm, and the axis should be perpendicular to reference surface A]

APPENDIX F
Technical drawing of the semi-finished product with modifications

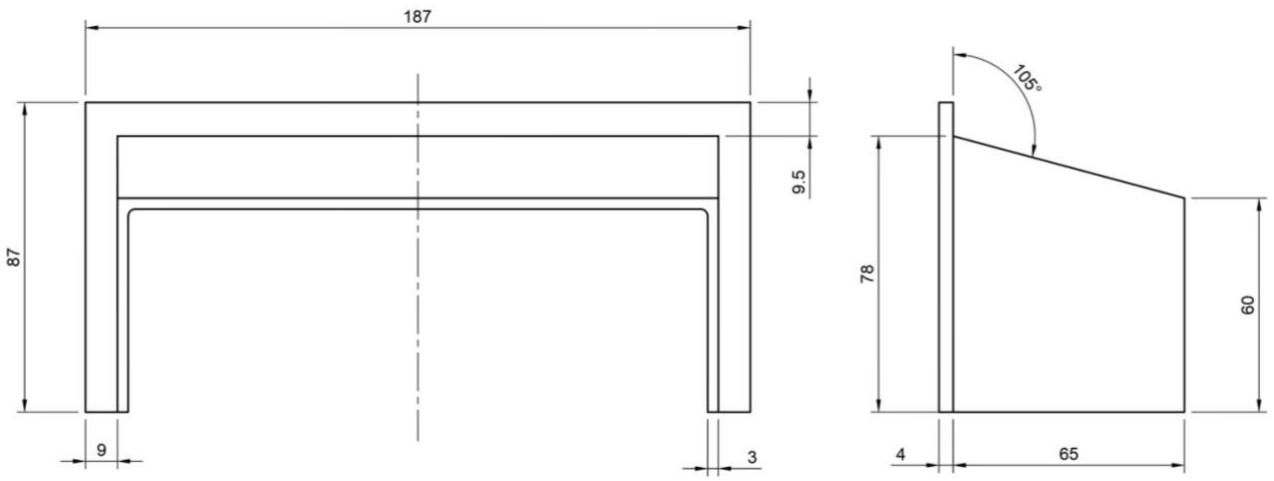

FILES

Below is a Table explaining all the files attached with the report.

File name	Extension	Description
Protective_shell	.f3d	Autodesk Fusion 360 file containing the 3D model of the protective shell for the BTicino Magic 503/3 electrical sockets with which the production process was simulated. It also contains the 3D model of the starting semi-finished product and the model of the mentioned plate to test how the shell would look once installed on it. This is the file from which all the values for the mechanical machining of the product were taken.
Pallet	.f3d	Autodesk Fusion 360 file containing the 3D model of the pallet with all bodies (raw products, semi-finished products, and finished products) that allow visualizing the pallet before and after the robot configuration.
Modified_protective_shell	.f3d	Autodesk Fusion 360 file containing the 3D model of the protective shell for the BTicino Magic 505/5 electrical sockets (product variant). It also contains the 3D model of the starting semi-finished product. This is the file from which all the mechanical machining values of the modified product were taken.
HAAS_UMC-750	.f3d	Autodesk Fusion 360 file containing the 3D model of the machine chosen to machine the shell, namely the UMC-750. The file was provided by the machine manufacturer.
HAAS_UMC-750_tds	.pdf	PDF document containing the data sheet of the machine chosen to process the shell.
Project_Work	.xlsx	Excel file used for report calculations. It contains three spreadsheets: • MWS_and_ToolAnalysis: spreadsheet used for the calculations concerning the MWS durations of the two analysed products. • Cobot_configuration: spreadsheet containing the table with all the configurations the robot takes to configure the pallet. • FMS_configuration: spreadsheet used to configure and size the production system and to evaluate changes with the product variant.
Webots	*Folder*	Folder generated by Webots development and simulation software for robots. Contains the world and Python code used to simulate the pallet configuration in the LU station. Videos and photos of Webots in the report are taken from the world inside this folder.
Cobot_station_simulation	.mp4	Video recording the movements of the cobot at the LU station. It was taken from the “world” in the Webots folder.
1001	.nc	G-Code derived from the simulation of the shell machining process from the file Protective_shell.f3d.