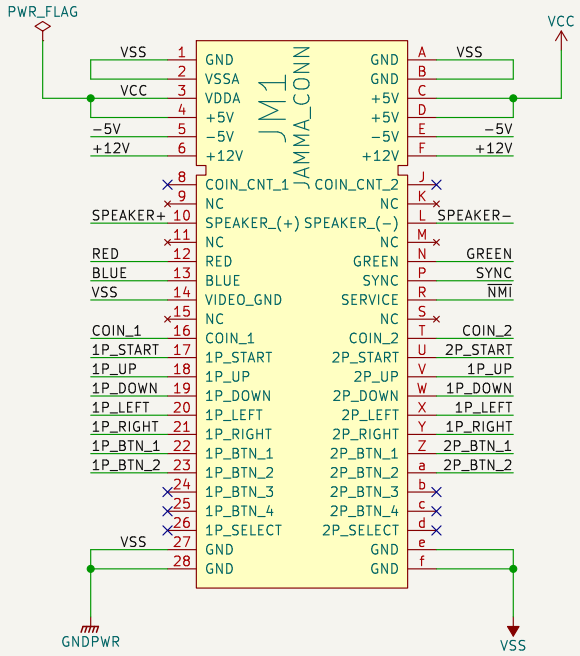

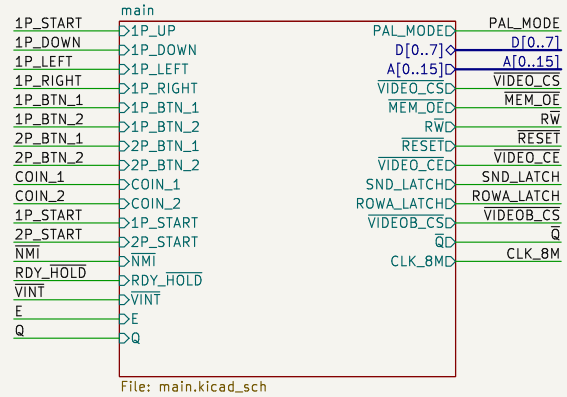

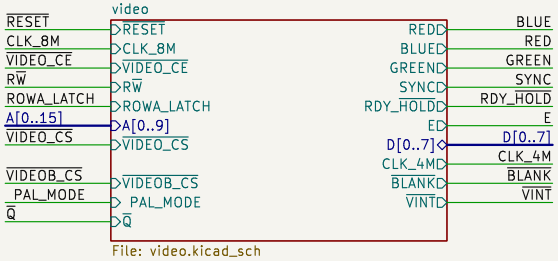

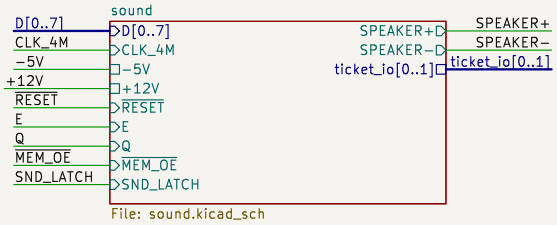

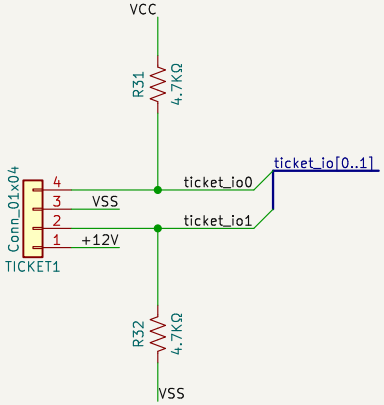

JOTEGO

JOTEGO

Sheet: /

File: bowl.kicad_sch

Title: Beer Frame Bowling

Size: A4	Date: 2022-06-06	**Rev: José Tejada G.**
KiCad E.D.A. 8.0.9		Id: 1/5

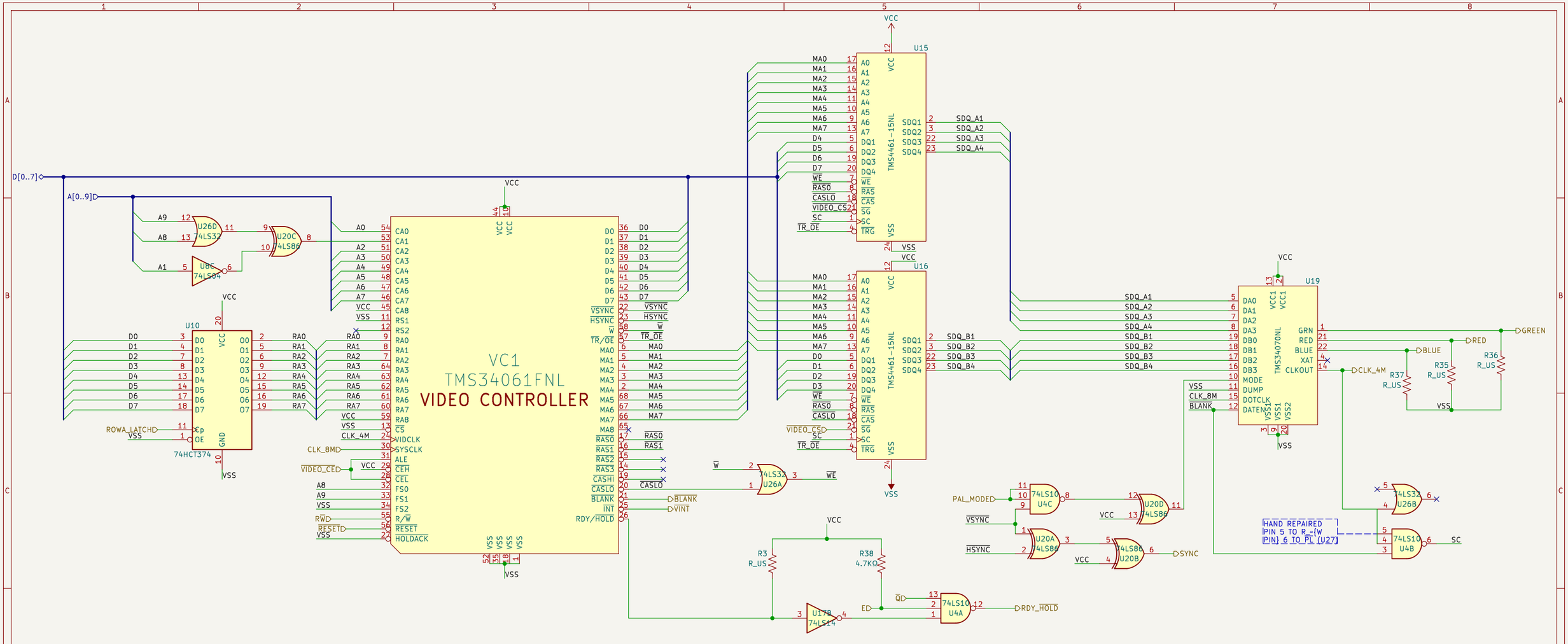

JOTEGO

JOTEGO

Sheet: /video/

File: video.kicad_sch

Title: Beer Frame Bowling

Size: A3	Date: 2022-06-06	**Rev: José Tejada G.**
KiCad E.D.A. 8.0.9		Id: 2/5

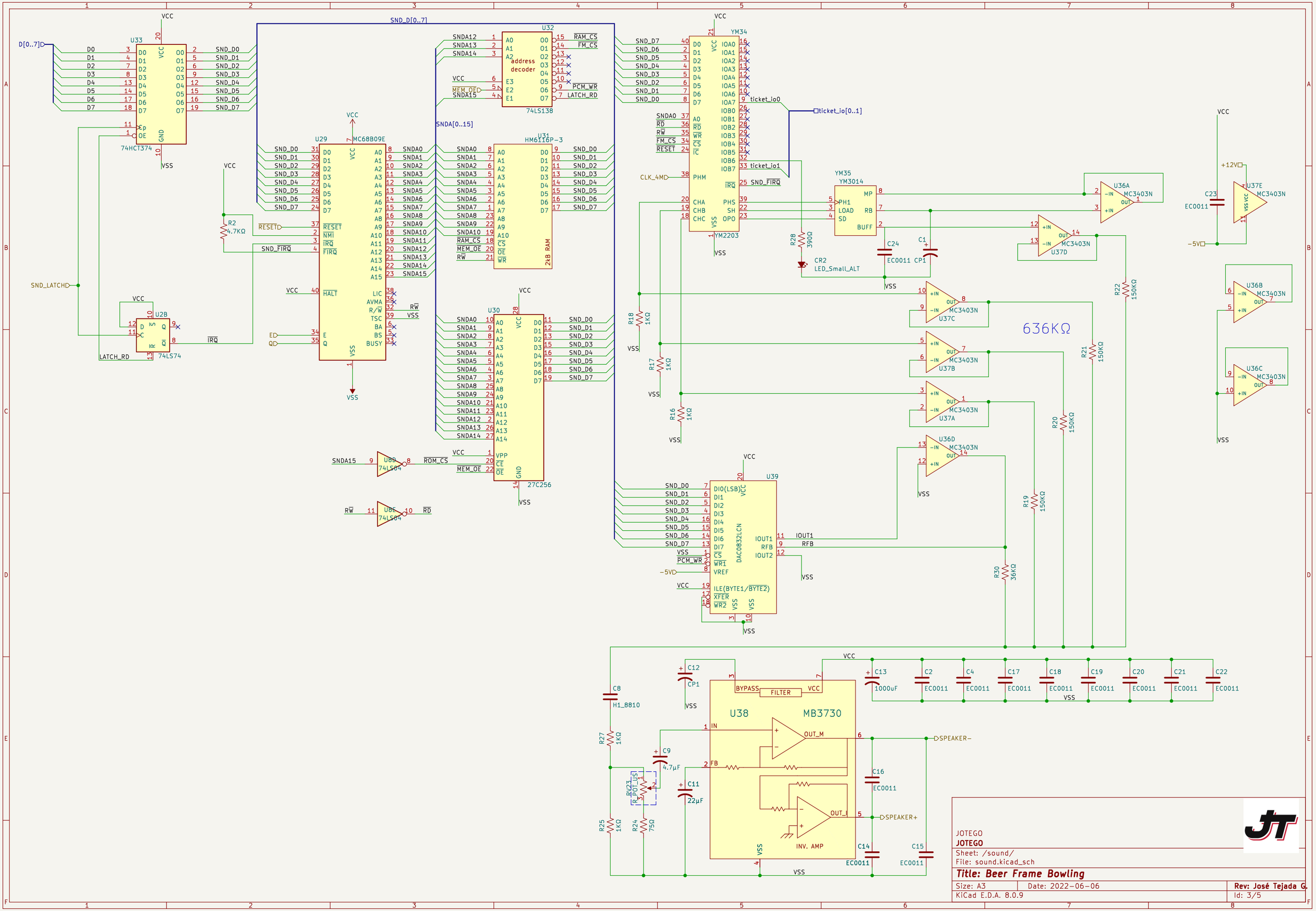
U33
74HCT374
U2B
74LS74
U29
MC68B09E
U32
74LS138
address decoder
U31
HM6116P-3
2kB RAM
U30
27C256
U8B
74LS04
U8E
74LS04
YM34
YM2203
YM35
YM3014
U39
DAC0832LCN
U36A
U36B
U36C
U36D
U37A
U37B
U37C
U37D
U37E
MC3403N
636KΩ
U38
MB3730
BYPASS
FILTER
INV. AMP
SPEAKER−
SPEAKER+
ticket_io[0..1]
SND_D[0..7]
SNDA[0..15]
D[0..7]
SND_LATCH
LATCH_RD
CLK_4M
RESET
SND_FIRQ
RAM_CS
FM_CS
PCM_WR
MEM_OE
ROM_CS
VCC
VSS
+12V
−5V
JOTEGO
JOTEGO
Sheet: /sound/
File: sound.kicad_sch
Title: Beer Frame Bowling
Size: A3
Date: 2022-06-06
Rev: José Tejada G.
KiCad E.D.A. 8.0.9
Id: 3/5

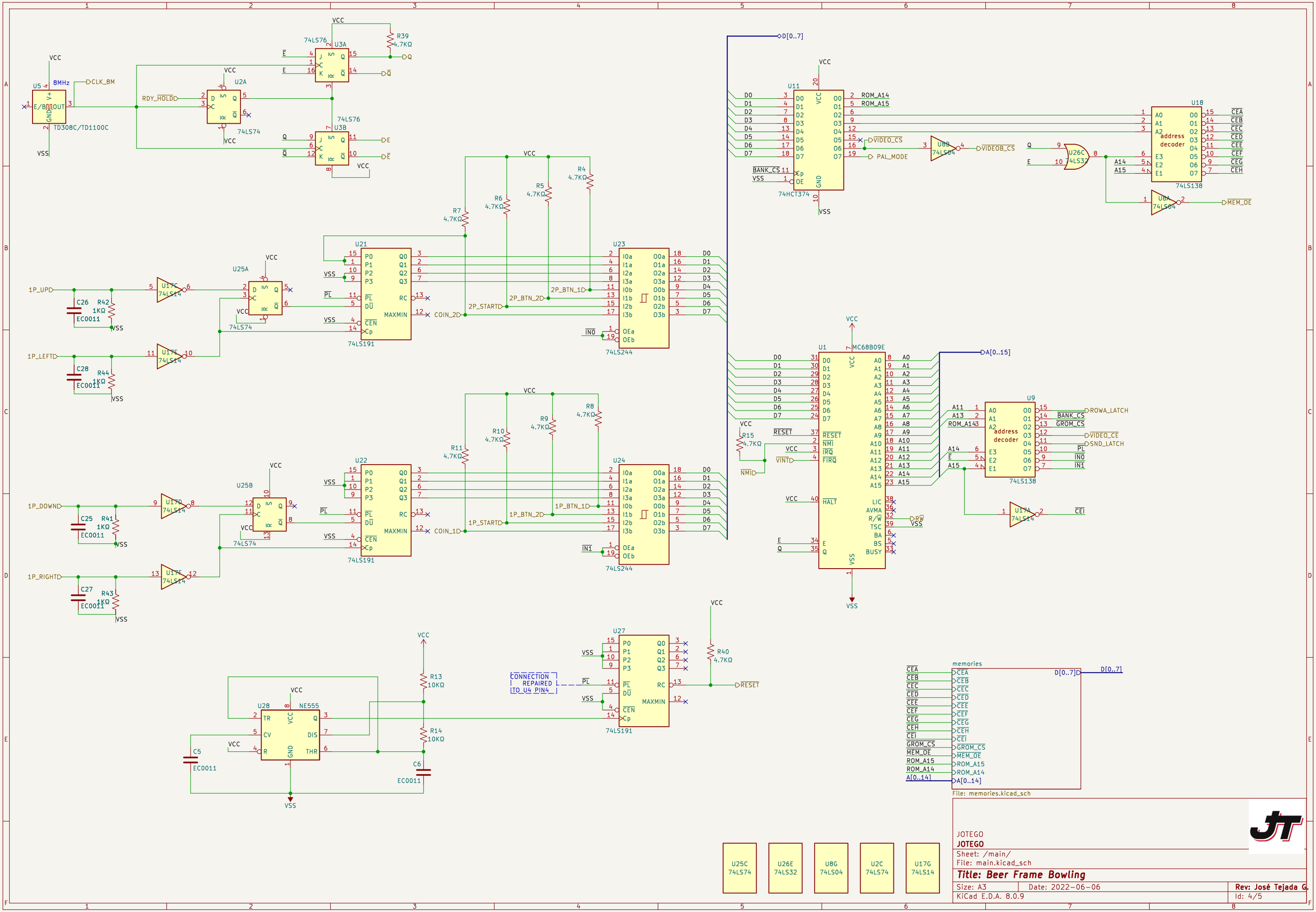
U5
8MHz
CLK_8M
TD308C/TD1100C
VCC
VSS
U2A
74LS74
RDY_HOLD
U3A
U3B
74LS76
R39
4.7KΩ
U11
74HCT374
ROM_A14
ROM_A15
VIDEO_CS
PAL_MODE
BANK_CS
U8B
74LS04
VIDEOB_CS
U26C
74LS32
U18
address decoder
74LS138
CEA
CEB
CEC
CED
CEE
CEF
CEG
CEH
U8A
MEM_OE
D[0..7]
U21
U23
74LS191
74LS244
MAXMIN
COIN_2
2P_BTN_2
2P_BTN_1
2P_STARTD
IN0
U22
U24
COIN_1
1P_BTN_2
1P_BTN_1
1P_STARTD
IN1
U1
MC68B09E
RESET
NMI
IRQ
FIRQ
HALT
LIC
AVMA
R/W
TSC
BA
BS
BUSY
R15
4.7KΩ
VINT
A[0..15]
U9
ROWA_LATCH
GROM_CS
VIDEO_CE
SND_LATCH
PL
IN0
IN1
U17A
74LS14
CEI
1P_UP
1P_LEFT
1P_DOWN
1P_RIGHT
U17C
U17E
U17D
U17F
U25A
U25B
C26
C28
C25
C27
R42
R44
R41
R43
1KΩ
EC0011
U28
NE555
TR
CV
R
GND
DIS
THR
C5
C6
R13
R14
10KΩ
U27
CONNECTION REPAIRED TO_U4_PIN4_
R40
4.7KΩ
memories
File: memories.kicad_sch
U25C 74LS74
U26E 74LS32
U8G 74LS04
U2C 74LS74
U17G 74LS14
JOTEGO
JOTEGO
Sheet: /main/
File: main.kicad_sch
Title: Beer Frame Bowling
Size: A3
Date: 2022-06-06
KiCad E.D.A. 8.0.9
Rev: José Tejada G.
Id: 4/5

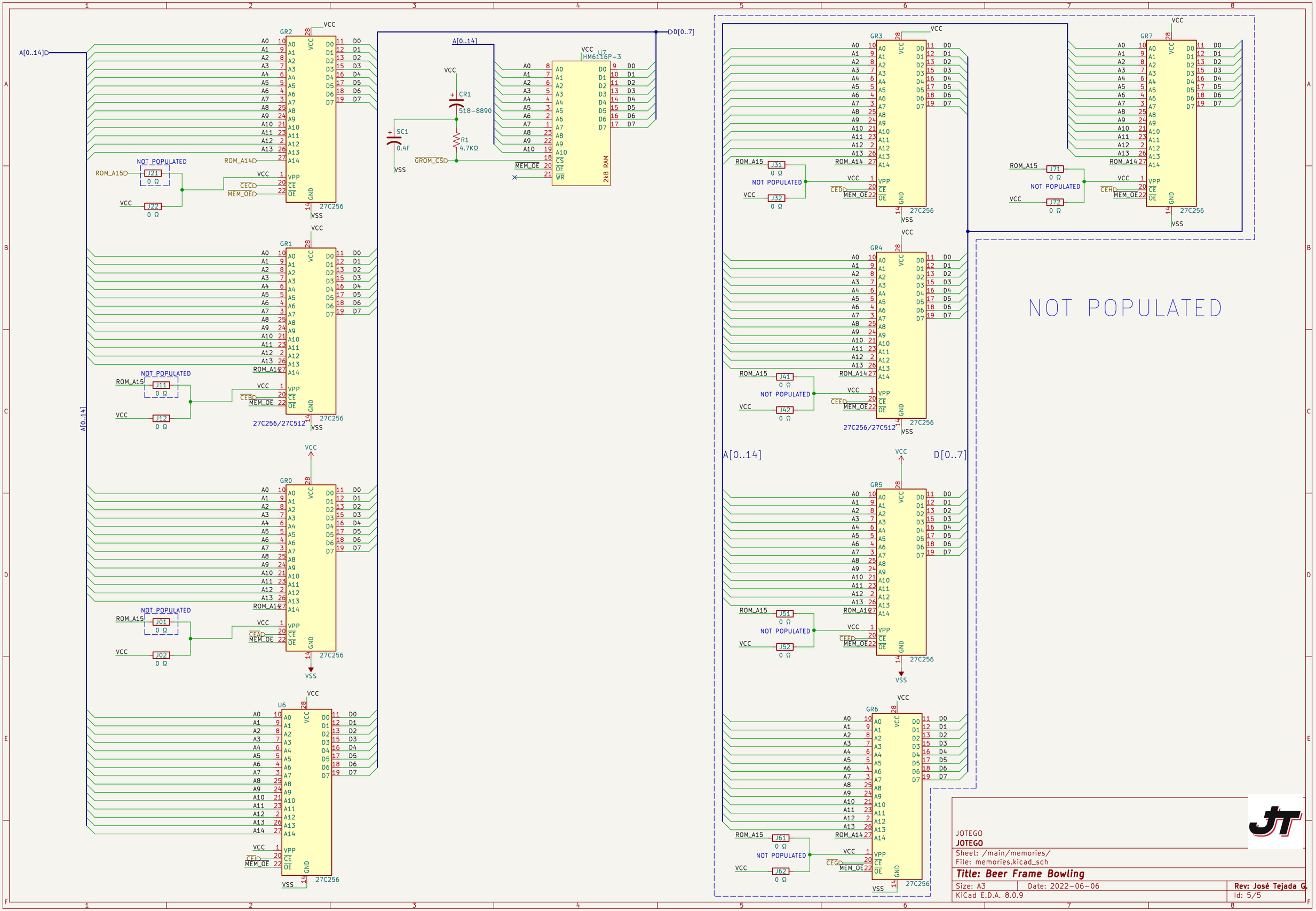

JOTEGO

JOTEGO

Sheet: /main/memories/

File: memories.kicad_sch

Title: Beer Frame Bowling

Size: A3	Date: 2022-06-06	**Rev: José Tejada G.**
KiCad E.D.A. 8.0.9		Id: 5/5