cpu board

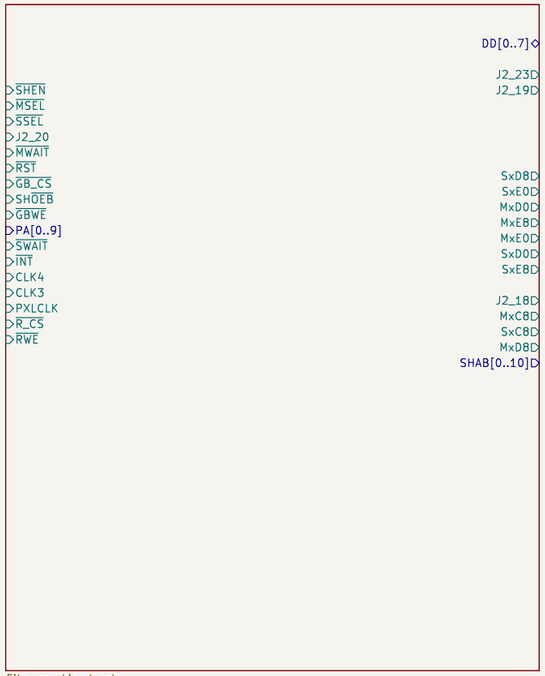

File: cpu.kicad_sch

video board

File: video.kicad_sch

Jose Tejada
JOTEGO

Sheet: /
File: tehkanwc.kicad_sch

Title: TEHKAN WORLD CUP

Size: A3	Date: 2024-10-12	**Rev:**
KiCad E.D.A. 8.0.5		Id: 1/21

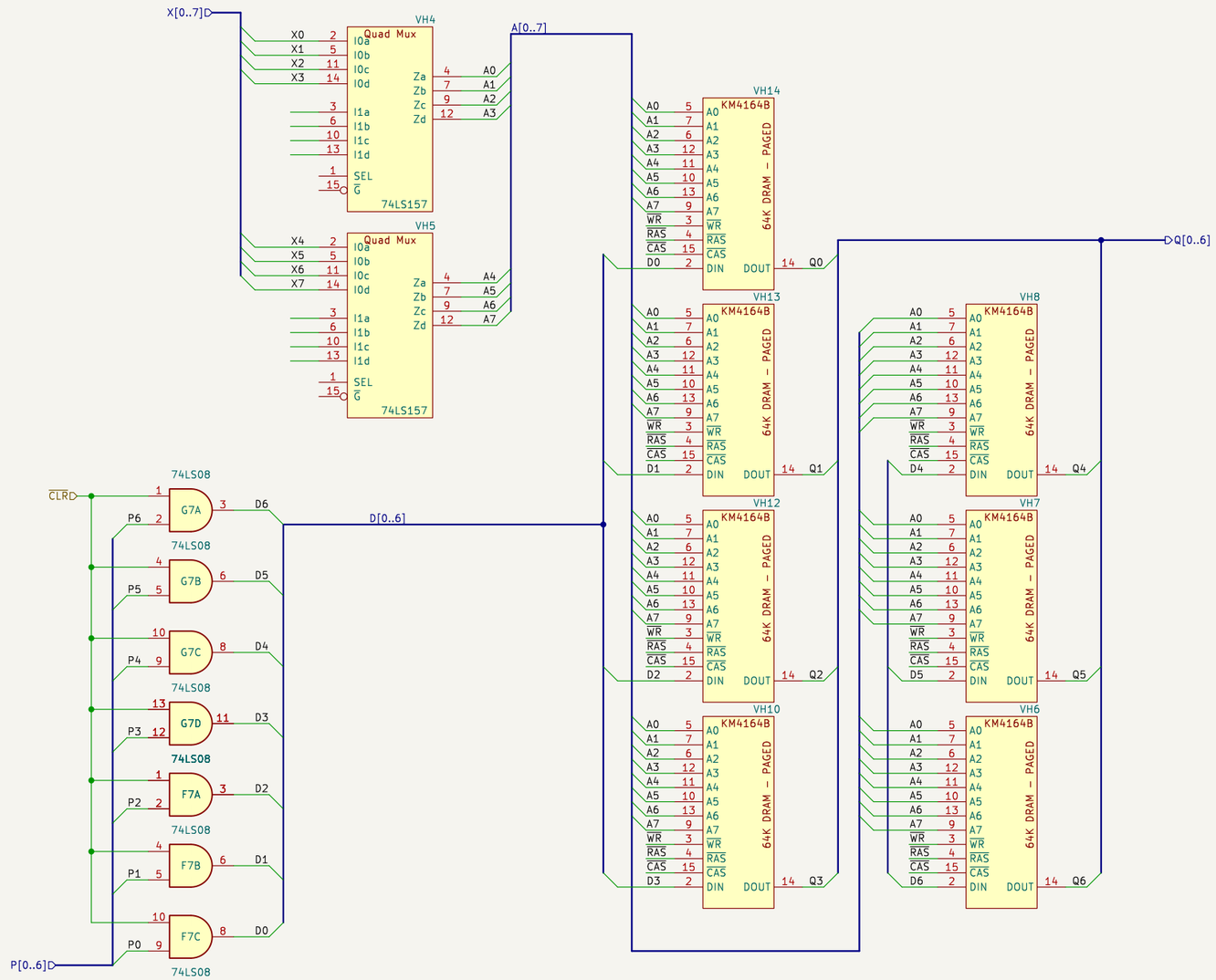

Jose Tejada
JOTEGO

Sheet: /video board/object/line buffer B/
File: linebuffer.kicad_sch

Title: Line Buffer

Size: A3	Date: 2024-10-12	**Rev:**
KiCad E.D.A. 8.0.5		Id: 2/21

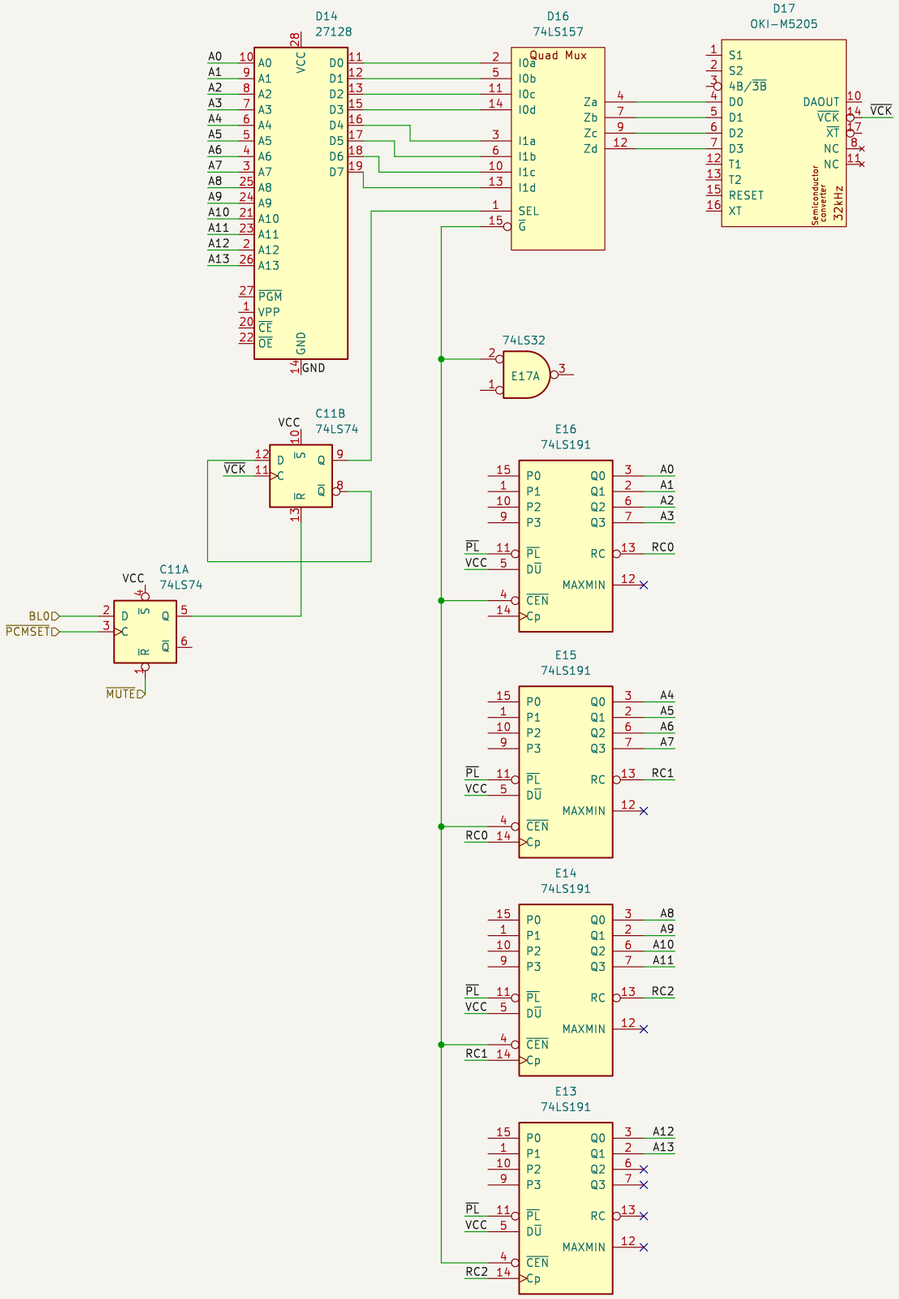

Jose Tejada		
JOTEGO		
Sheet: /cpu board/sound/PCM/		
File: pcm.kicad_sch		
Title: PCM		
Size: A3	Date: 2024-10-12	**Rev:**
KiCad E.D.A. 8.0.5		Id: 5/21

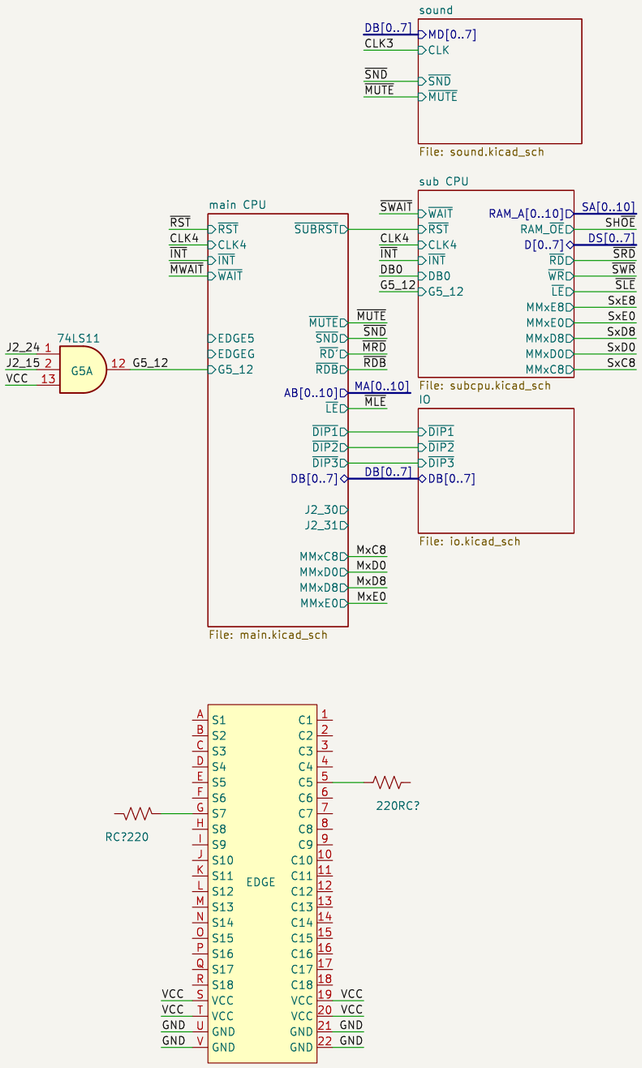

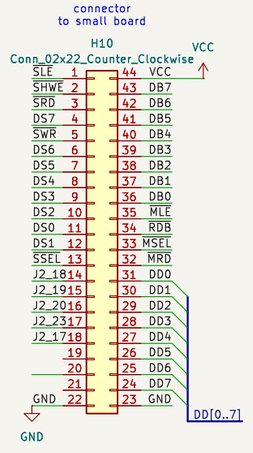

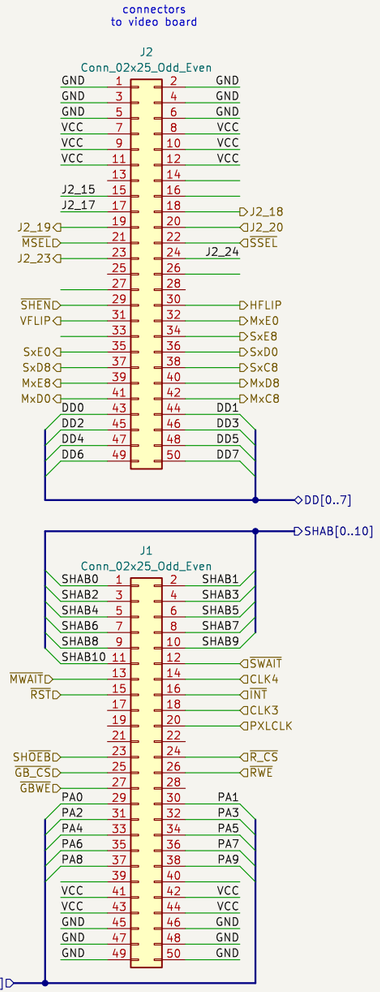

Jose Tejada
JOTEGO

Sheet: /cpu board/
File: cpu.kicad_sch

Title:

Size: A3	Date: 2024-10-12	**Rev:**
KiCad E.D.A. 8.0.5		Id: 9/21

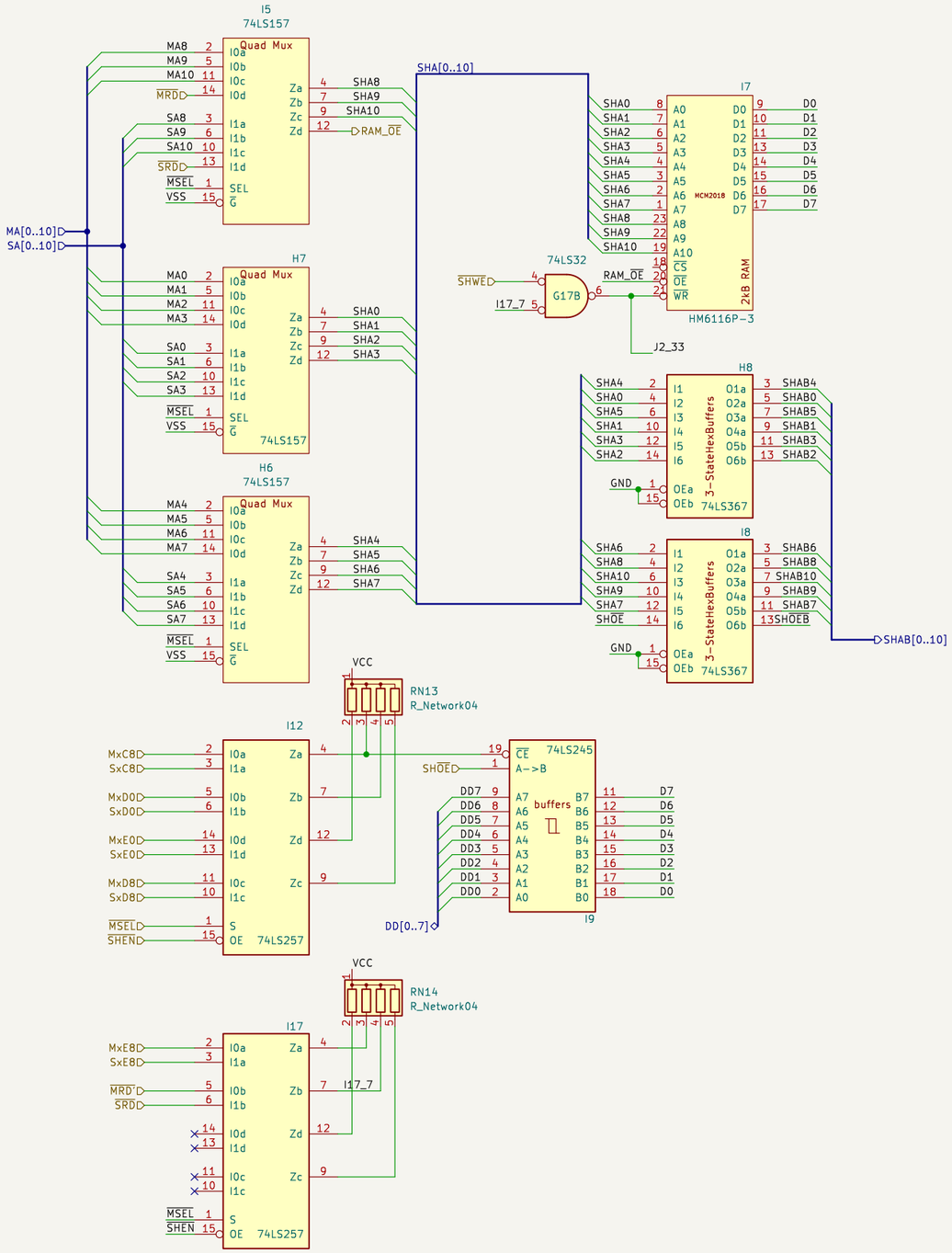

Jose Tejada
JOTEGO
Sheet: /cpu board/shared/
File: shared.kicad_sch

Title: Shared Memory

Size: A3	Date: 2024-10-12	**Rev:**
KiCad E.D.A. 8.0.5		Id: 10/21

timing

HFLIP
VFLIP
HFLIP
VFLIP

File: timing.kicad_sch

scroll

File: scroll.kicad_sch

object

D[0..7]
PXL[0..6]

File: object.kicad_sch

color mixer

OBJ[0..6]
PA[0..9]
PA[0..9]

File: colmix.kicad_sch

fix

File: fix.kicad_sch

connectors
to CPU board

VJ1

GND	2	1	GND		
GND	4	3	GND		
GND	6	5	GND		
VCC	8	7	VCC		
VCC	10	9	VCC		
	12	11			
PA8	14	13	PA9		
PA6	16	15	PA7		
PA4	18	17	PA5		
PA2	20	19	PA3		
PA0	22	21	PA1		
GBWE	24	23			
GB_CS	26	25	RWE		
SHOEB	28	27	R_CS		
	30	29			
	32	31	PXLCLK		
	34	33	CLK3		
RST	36	35	INT		
MWAIT	38	37	CLK4		
SHAB10	40	39	SWAIT		
SHAB8	42	41	SHAB9		
SHAB6	44	43	SHAB7		
SHAB4	46	45	SHAB5		
SHAB2	48	47	SHAB3		
SHAB0	50	49	SHAB1		

PA[0..9]
SHAB[0..10]
DD[0..7]

VJ2

DD6	2	1	DD7		
DD4	4	3	DD5		
DD2	6	5	DD3		
DD0	8	7	DD1		
MxD0	10	9			
MxE8	12	11	MxC8		
SxD8	14	13	MxD8		
SxE0	16	15	SxC8		
	18	17	SxD0		
VFLIP	20	19	SxE8		
SHEN	22	21	MxE0		
	24	23	HFLIP		
	26	25			
J2_23	28	27	J2_24		
MSEL	30	29			
J2_19	32	31	SSEL		
J2_17	34	33	J2_20		
J2_15	36	35	J2_18		
	38	37			
VCC	40	39	VCC		
VCC	42	41	VCC		
VCC	44	43	VCC		
GND	46	45	GND		
GND	48	47	GND		
GND	50	49	GND		

Jose Tejada
JOTEGO

Sheet: /video board/
File: video.kicad_sch

Title:

Size: A3	Date: 2024-10-12	**Rev:**
KiCad E.D.A. 8.0.5		Id: 11/21

Jose Tejada

JOTEGO

Sheet: /video board/scroll/

File: scroll.kicad_sch

Title:

Size: A4	Date: 2024-10-12	**Rev:**
KiCad E.D.A. 8.0.5		Id: 12/21

Jose Tejada
JOTEGO

Sheet: /video board/fix/
File: fix.kicad_sch

Title:

Size: A3	Date: 2024-10-12	**Rev:**
KiCad E.D.A. 8.0.5		Id: 13/21

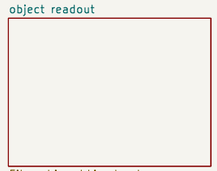

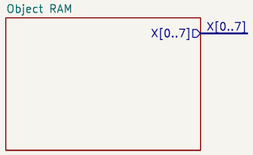

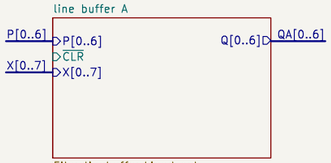

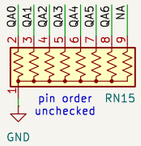

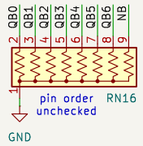

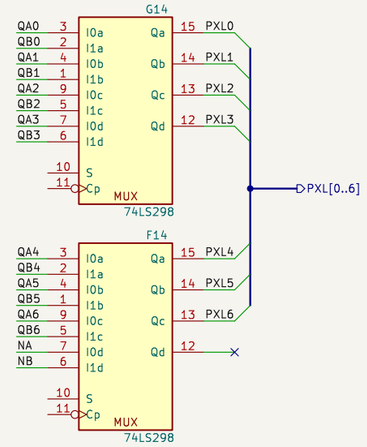

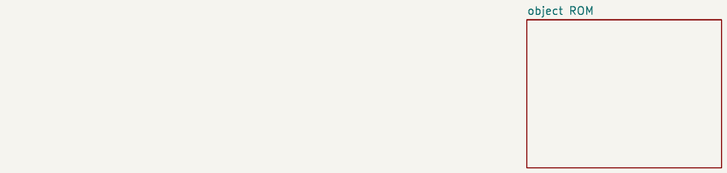

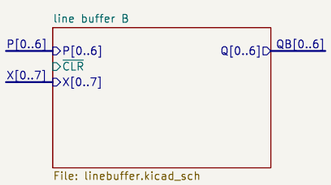

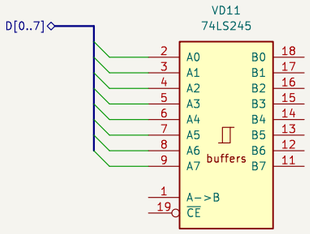

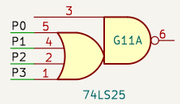

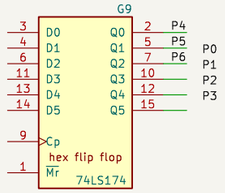

Jose Tejada
JOTEGO

Sheet: /video board/object/
File: object.kicad_sch

Title:

Size: A3	Date: 2024-10-12	**Rev:**
KiCad E.D.A. 8.0.5		Id: 14/21

clock divider by 3

K15
330

VJ15B
74LS04

C3
101

330

VJ15A
74LS04

Y1
18.000

VI20B
74LS107

VI20A
74LS107

74LS08
VG18C

74LS20
VG17A

74LS27
VG16A
VG16B

VI15
74LS161

VI16
74LS161
LSB

74LS04
VG20C

VI18
74LS161

VI19
74LS161

74LS00
VH20B
marked as
LS86 on board
but LS00 mounted

VG20B

VG21A
74LS74

VG19B
74LS74

74LS86
VH16D

VG19A
74LS74

74LS86
VH18D
VH18C
VH18B
VH18A

74LS86
VH19A
VH19B
VH19C
VH19D

74LS08
VG18D

VG18B

VG20D

VH17
3-StateHexBuffers
74LS367

VI17
3-StateHexBuffers
74LS367

Jose Tejada
JOTEGO

Sheet: /video board/timing/
File: timing.kicad_sch

Title: Video Timing

Size: A3	Date: 2024-10-12	Rev:
KiCad E.D.A. 8.0.5		Id: 15/21

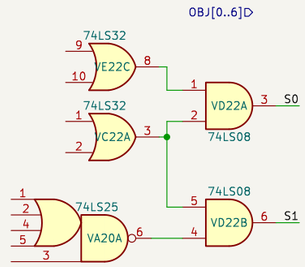

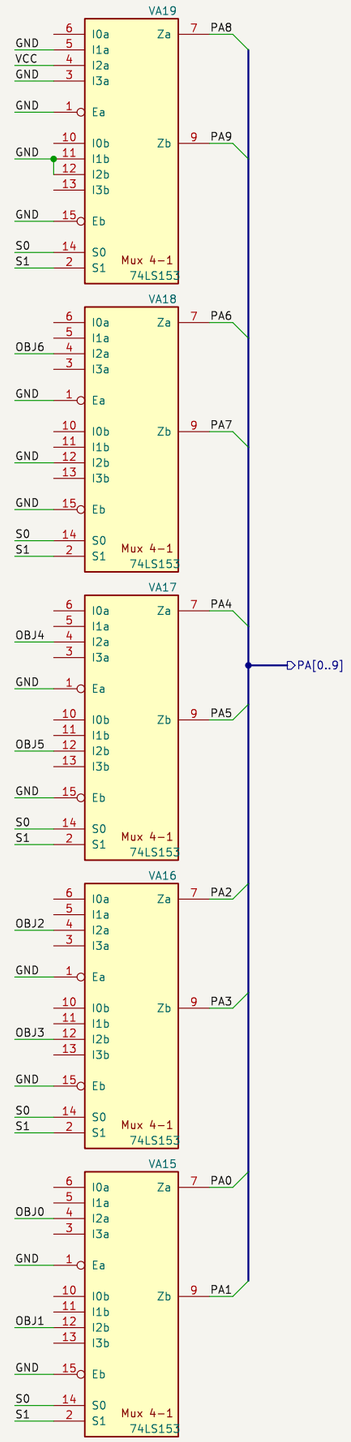

Jose Tejada		
JOTEGO		
Sheet: /video board/color mixer/		
File: colmix.kicad_sch		
Title:		
Size: A3	Date: 2024-10-12	**Rev:**
KiCad E.D.A. 8.0.5		Id: 16/21

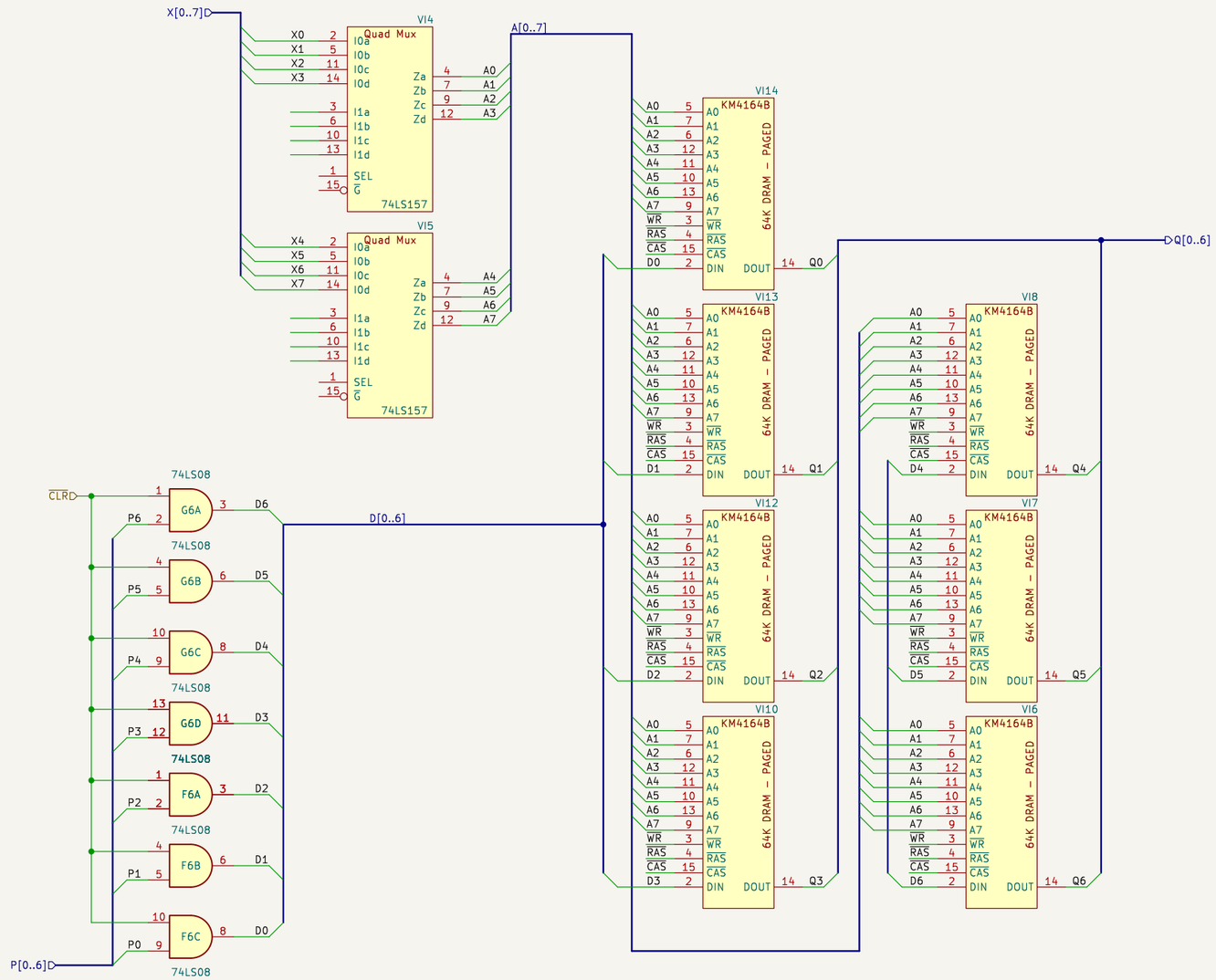

Jose Tejada
JOTEGO
Sheet: /video board/object/line buffer A/
File: linebuffer.kicad_sch

Title: Line Buffer

Size: A3	Date: 2024-10-12	**Rev:**
KiCad E.D.A. 8.0.5		Id: 17/21

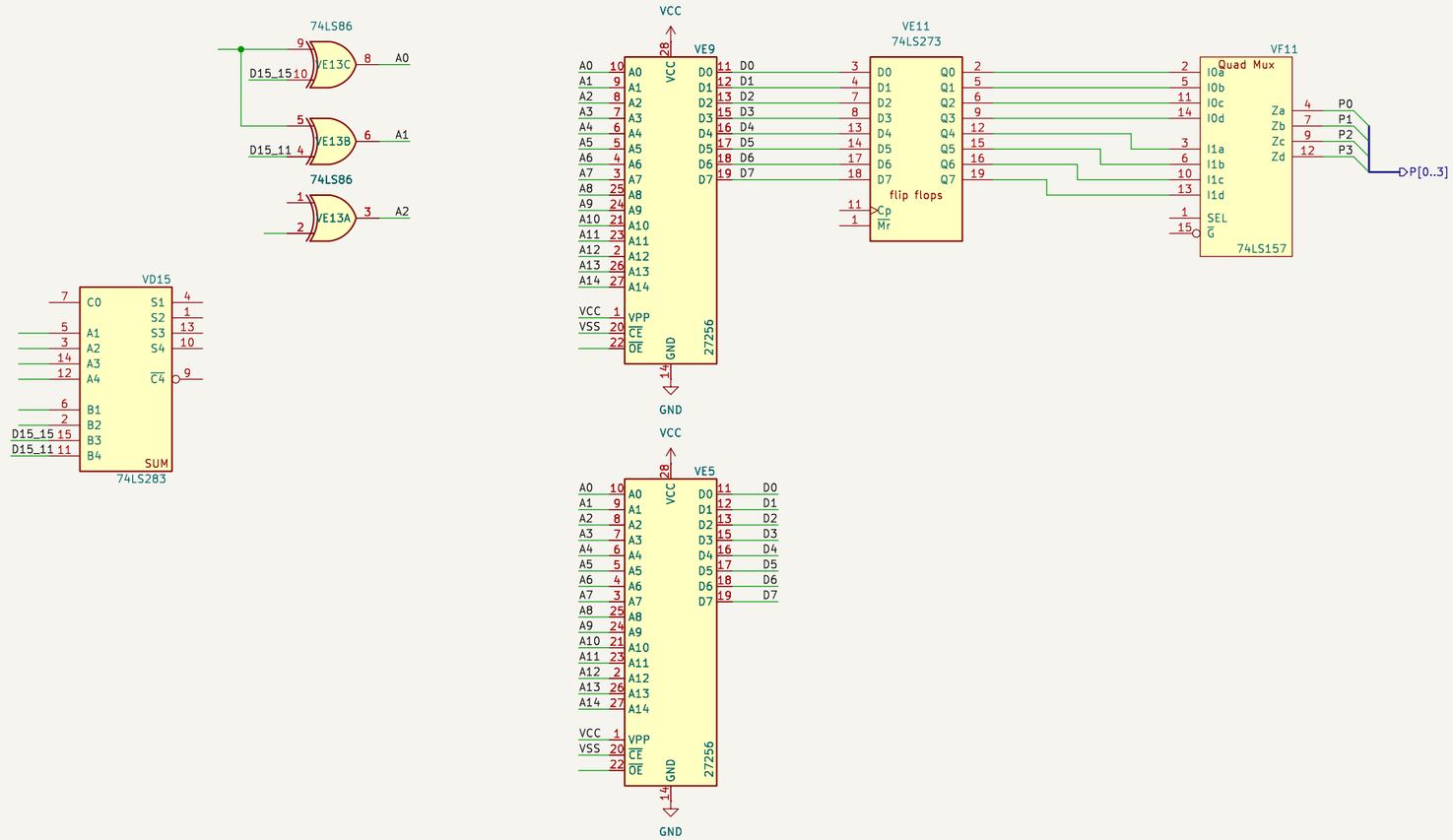

Jose Tejada
JOTEGO

Sheet: /video board/object/object ROM/
File: objrom.kicad_sch

Title:

Size: A3	Date: 2024-10-12	**Rev:**
KiCad E.D.A. 8.0.5		Id: 19/21

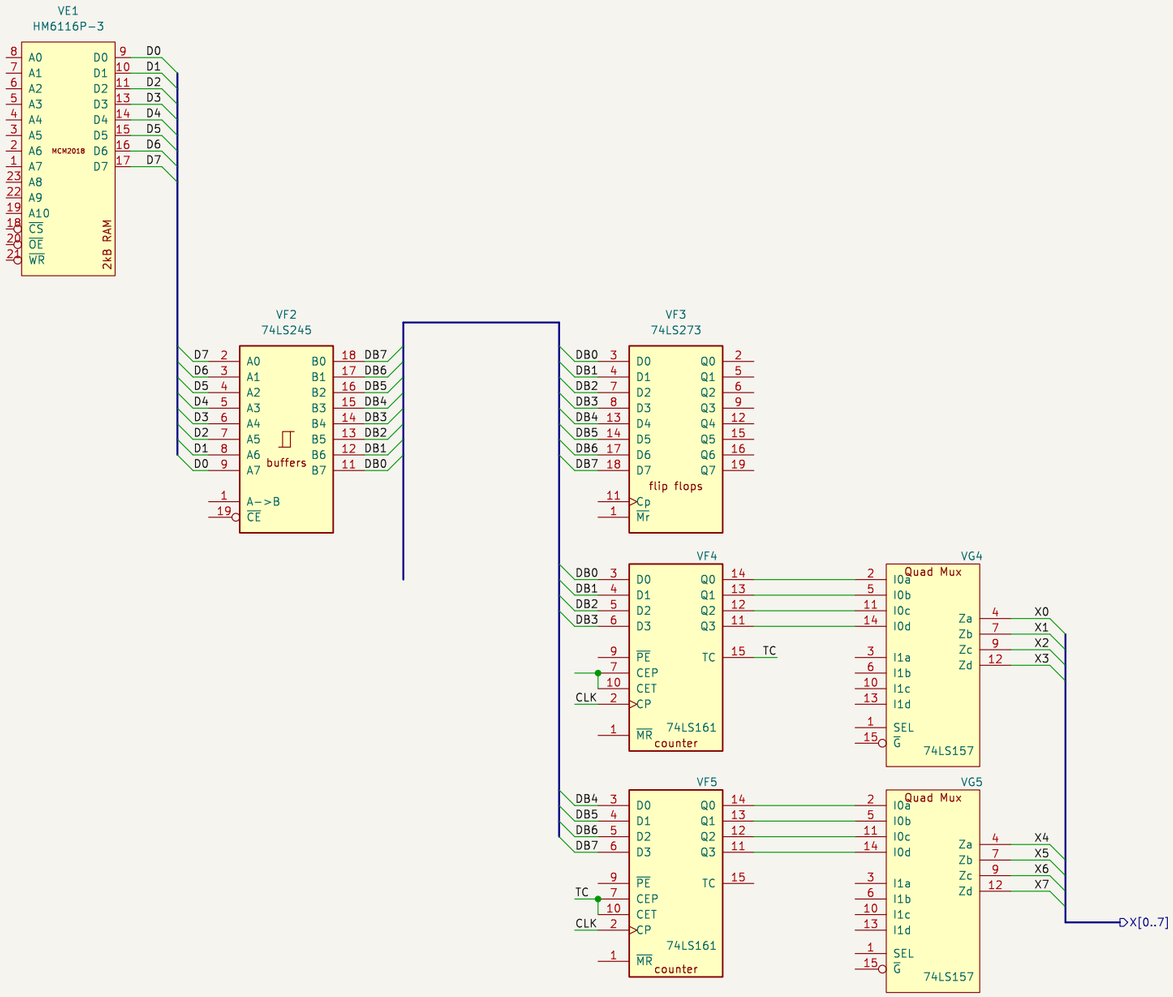

Jose Tejada
JOTEGO

Sheet: /video board/object/Object RAM/		
File: objram.kicad_sch		
Title:		
Size: A3	Date: 2024-10-12	**Rev:**
KiCad E.D.A. 8.0.5		Id: 20/21

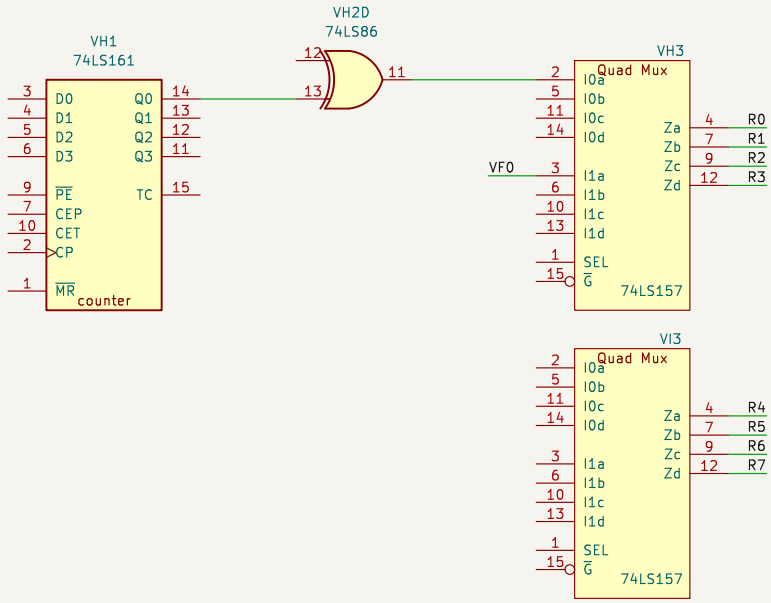

Jose Tejada
JOTEGO
Sheet: /video board/object/object readout/
File: objread.kicad_sch

Title:

Size: A4	Date: 2024-10-12	**Rev:**
KiCad E.D.A. 8.0.5		Id: 21/21

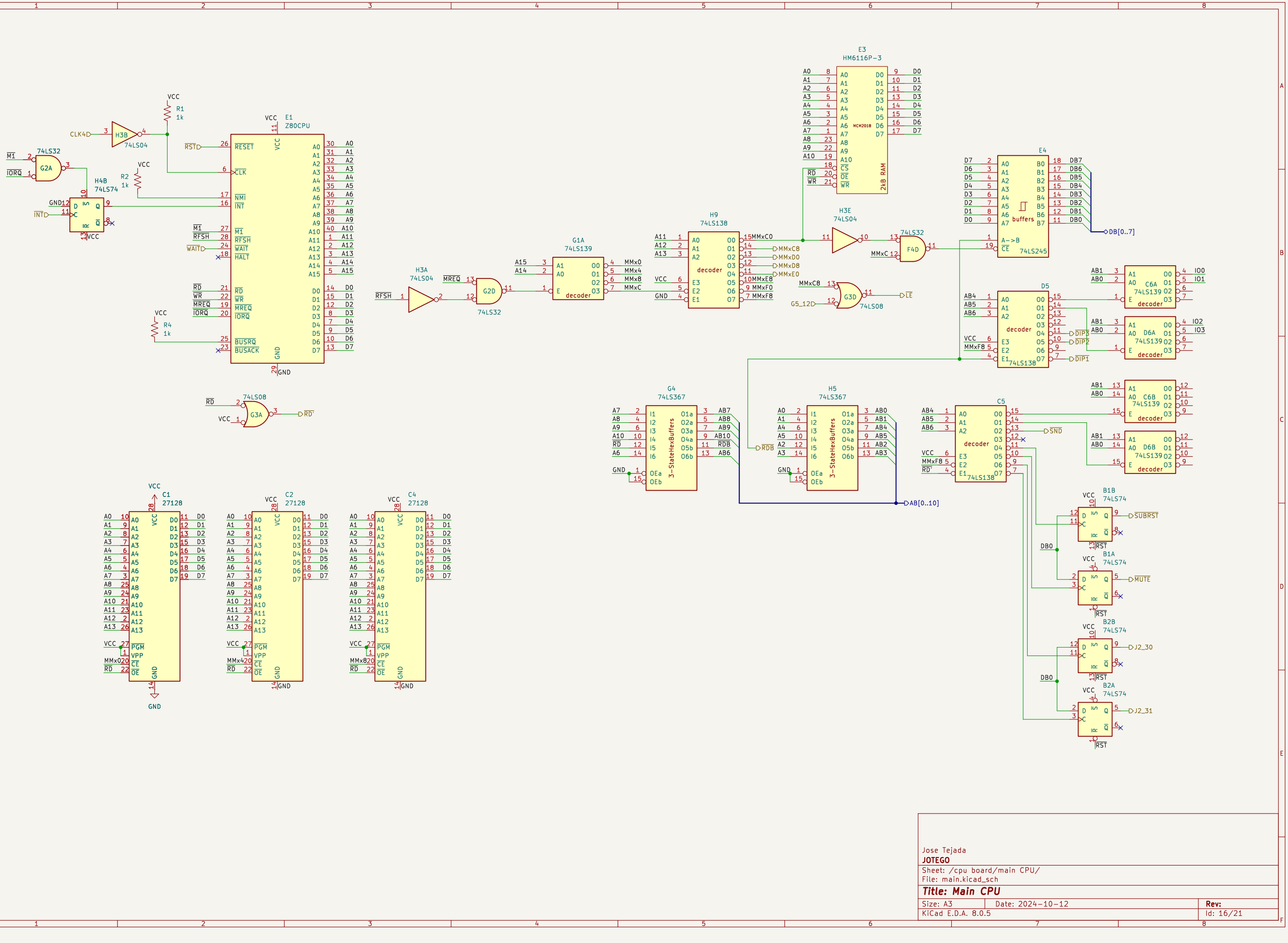

Jose Tejada
JOTEGO

Sheet: /cpu board/main CPU/
File: main.kicad_sch

Title: Main CPU

Size: A3	Date: 2024-10-12	**Rev:**
KiCad E.D.A. 8.0.5		Id: 16/21

Taps to unpopulated sockets

H17A 74LS04

G17A 74LS32

H16B 74LS139

E17B 74LS32

H16A 74LS139

F12 YM2149

F15 YM2149

G6B 74LS74

G13 Z80CPU

H13 27128

I14 HM6116P-3

74LS04 H17C

I16B 74LS74

74LS04 H17D

D12 74LS174

F16B 74LS02

F16A 74LS02

F16D 74LS02

H17F 74LS04

E17D 74LS32

G16D 74LS02

G16B 74LS02

74LS32 E17C

G16A 74LS02

74LS08 E10D

F4A 74LS32

F17 74LS367

E11 74LS374

F11 74LS245

PCM

File: pcm.kicad_sch

Jose Tejada
JOTEGO
Sheet: /cpu board/sound/
File: sound.kicad_sch

Title: Sound

Size: A3	Date: 2024-10-12	**Rev:**
KiCad E.D.A. 8.0.5		Id: 17/21

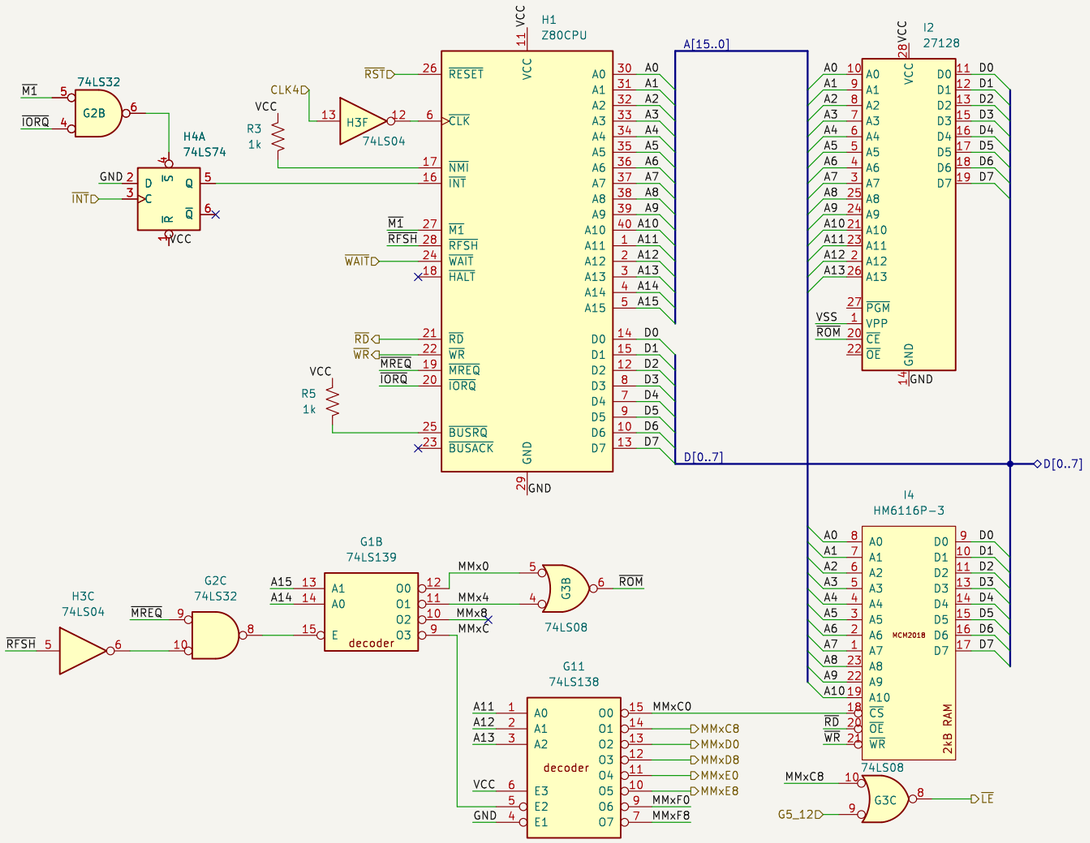

Jose Tejada		
JOTEGO		
Sheet: /cpu board/sub CPU/		
File: subcpu.kicad_sch		
Title: Subordinate CPU		
Size: A3	Date: 2024-10-12	**Rev:**
KiCad E.D.A. 8.0.5		Id: 18/21

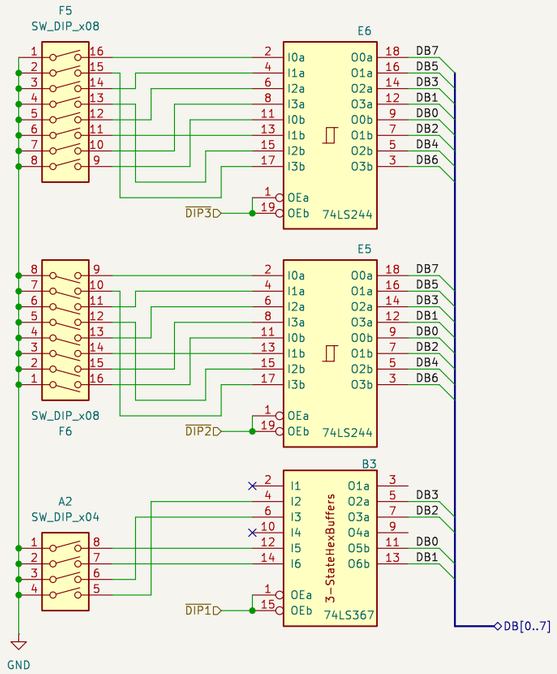

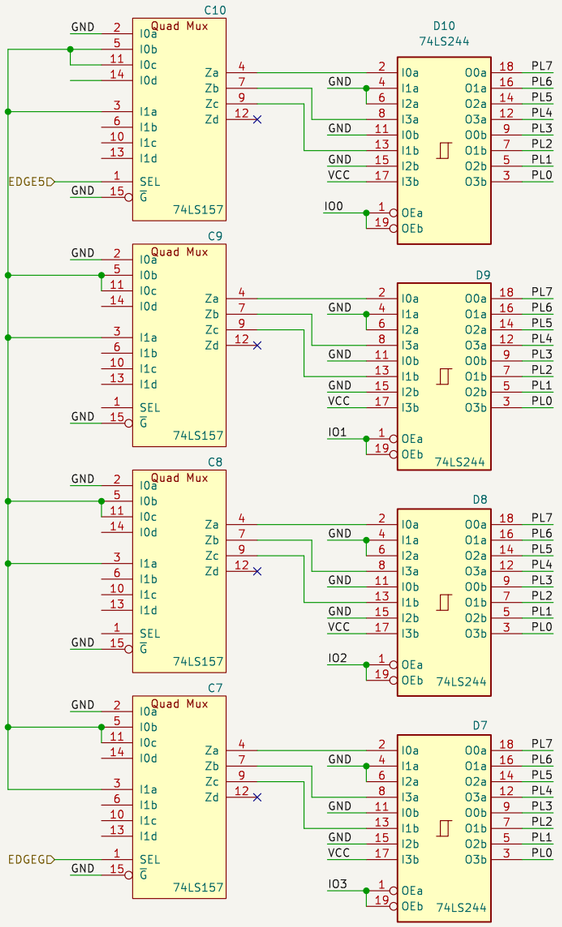

Jose Tejada
JOTEGO

Sheet: /cpu board/IO/
File: io.kicad_sch

Title: Cabinet Input/Output

Size: A3	Date: 2024-10-12	**Rev:**
KiCad E.D.A. 8.0.5		Id: 19/21

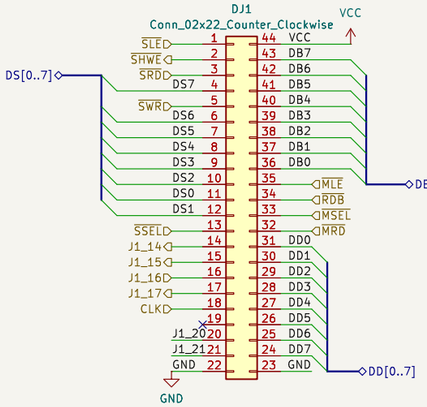

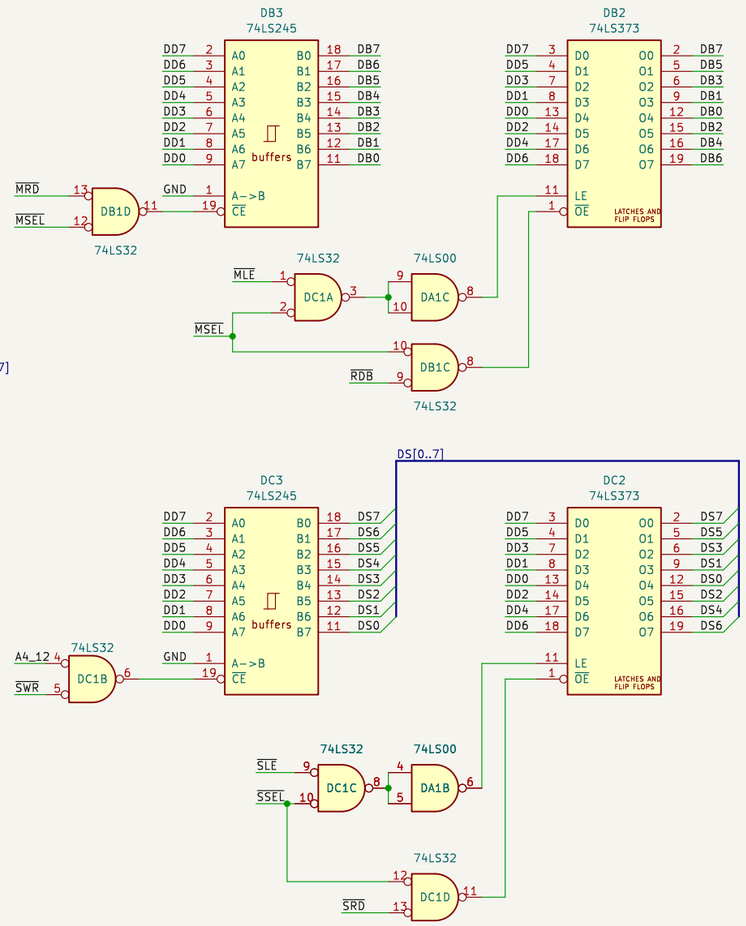

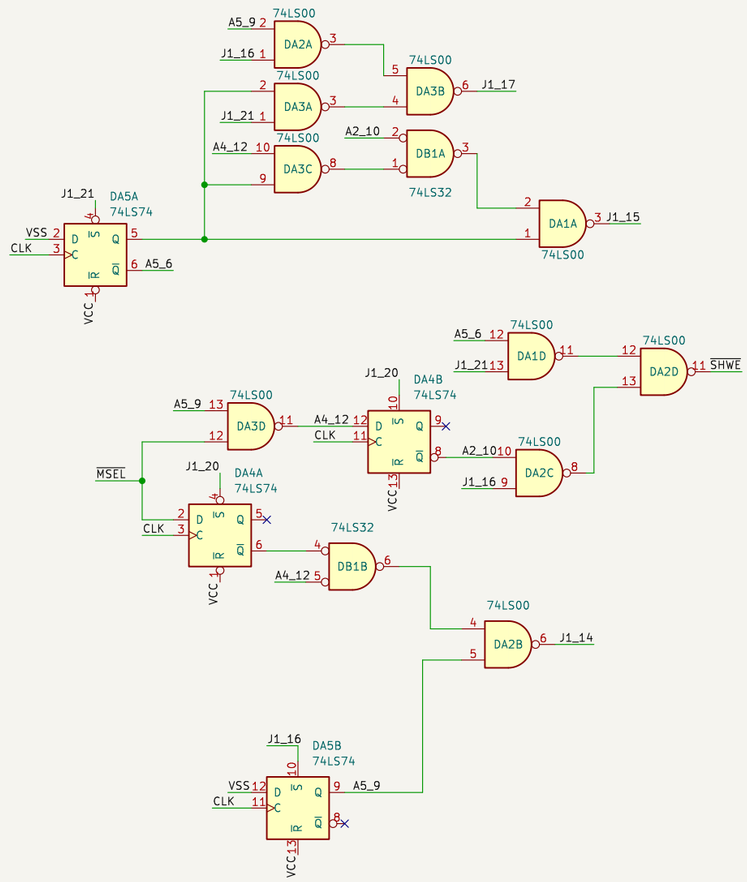

Jose Tejada
JOTEGO
Sheet: /cpu board/daughter/
File: daughter.kicad_sch

Title: Small daughter board

Size: A3	Date: 2024-10-12	**Rev:**
KiCad E.D.A. 8.0.5		Id: 20/21

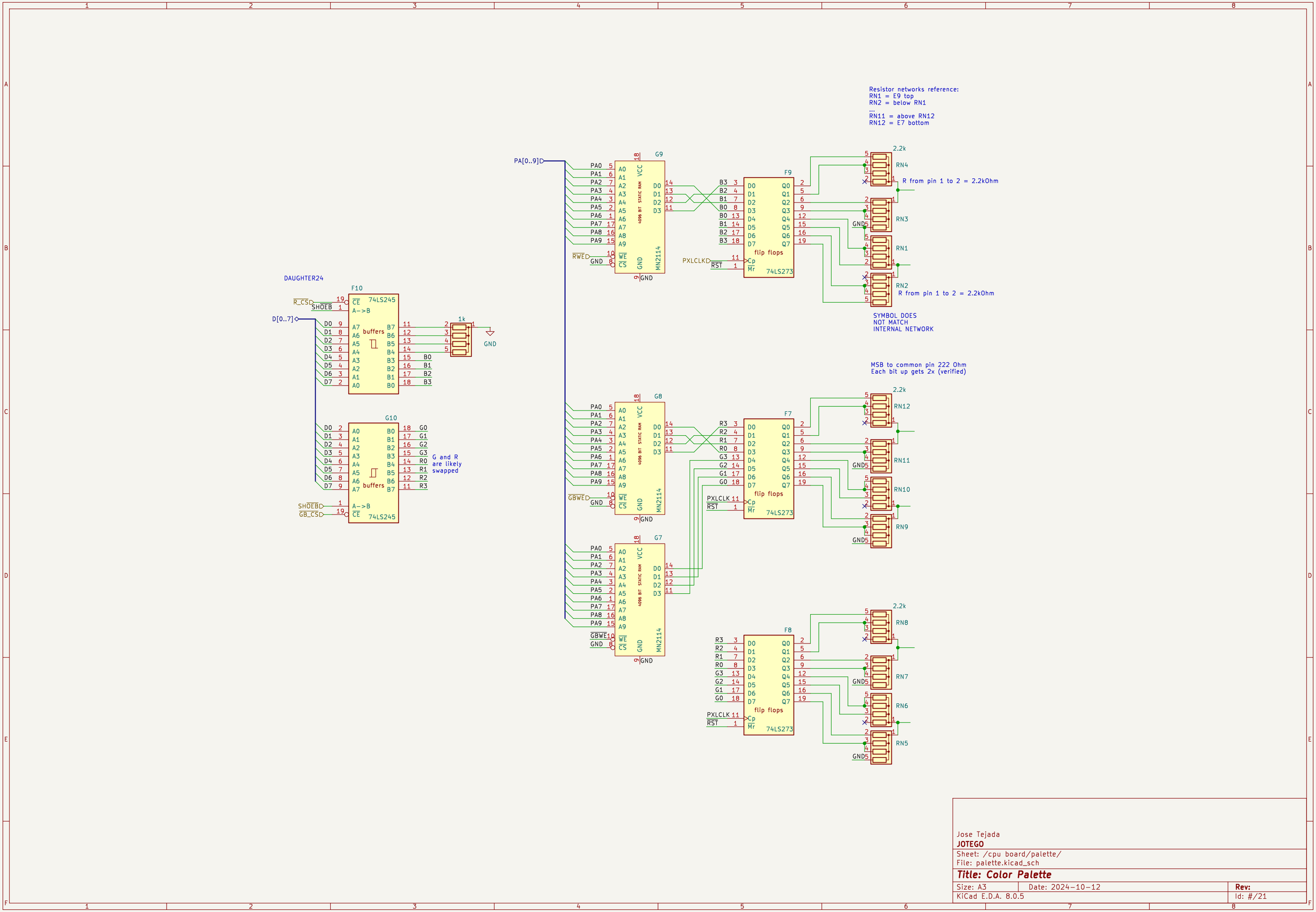

Jose Tejada
JOTEGO
Sheet: /cpu board/palette/
File: palette.kicad_sch
Title: Color Palette
Size: A3 | Date: 2024-10-12 | **Rev:**
KiCad E.D.A. 8.0.5 | Id: #/21