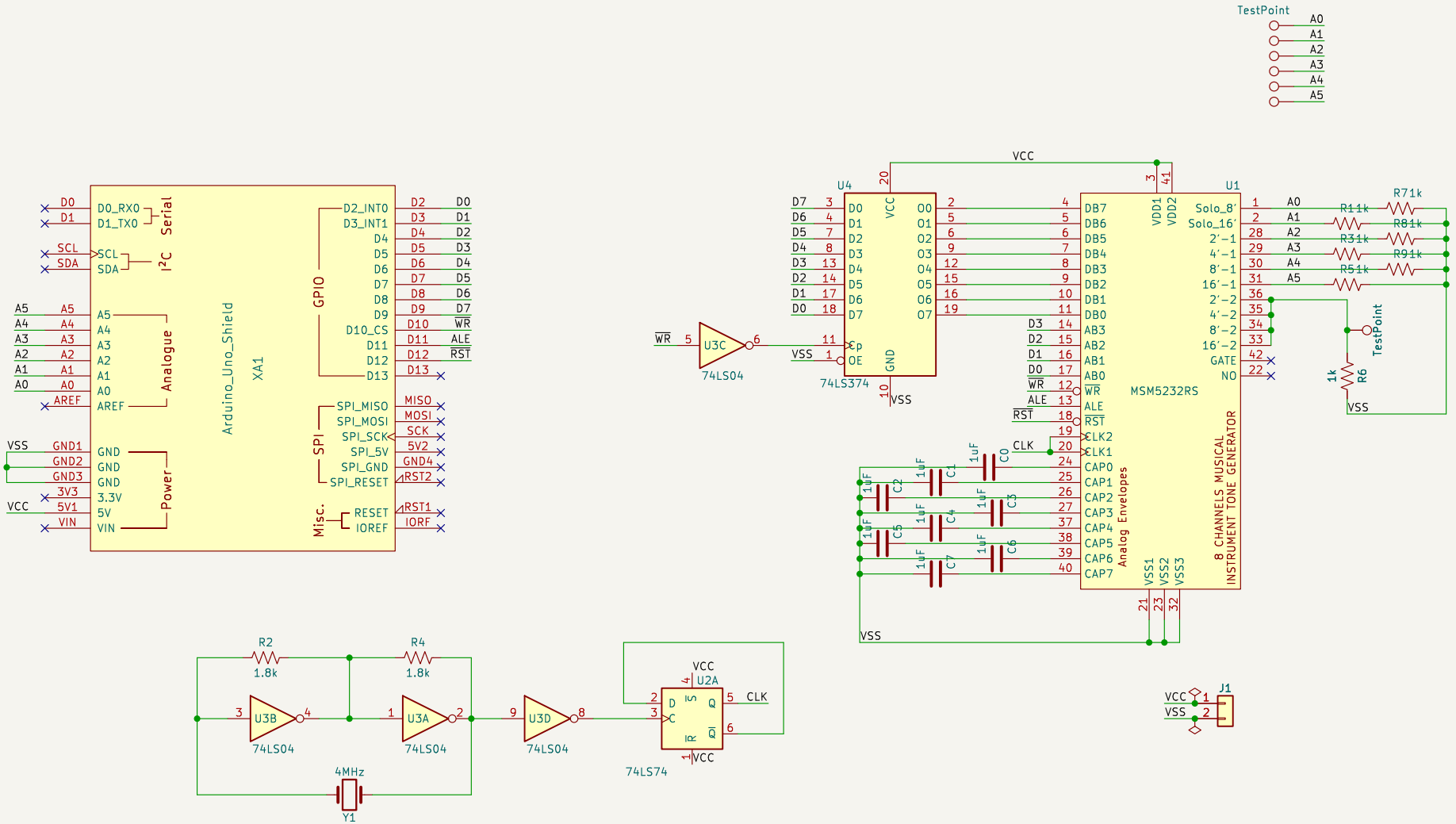

JOTEGO

Sheet: /

File: msm5232.kicad_sch

Title: Arduino to MSM5232

Size: A4	Date: 2024-12-04	**Rev: 1**
KiCad E.D.A. 8.0.6		Id: 1/1