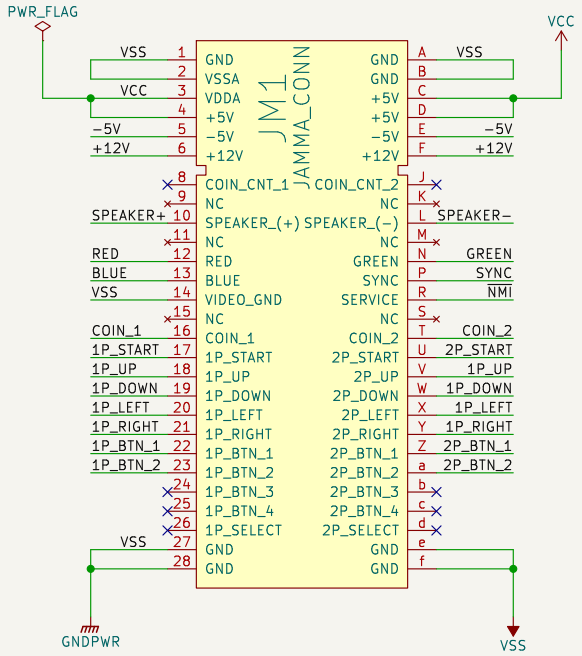

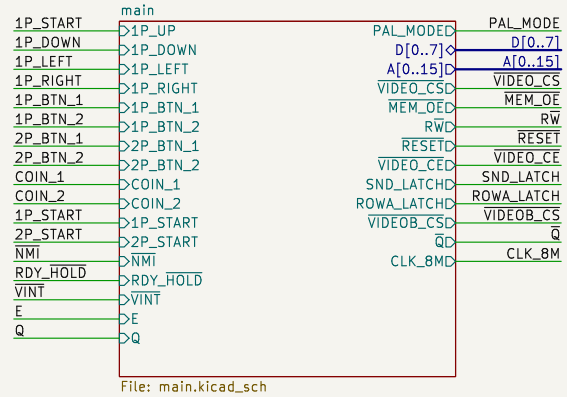

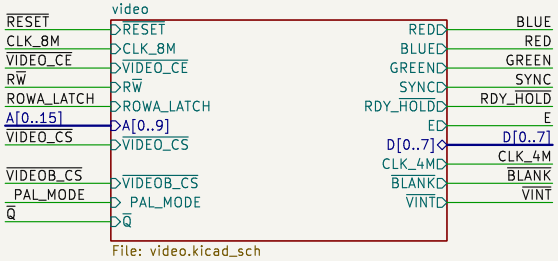

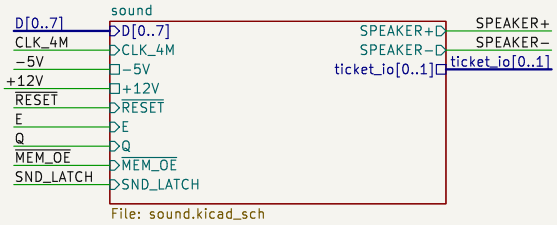

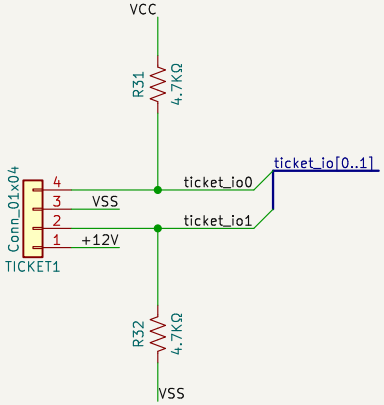

JOTEGO

JOTEGO

Sheet: /

File: bowl.kicad_sch

Title: Beer Frame Bowling

Size: A4	Date: 2022-06-06	**Rev: José Tejada G.**
KiCad E.D.A. 8.0.5		Id: 1/5

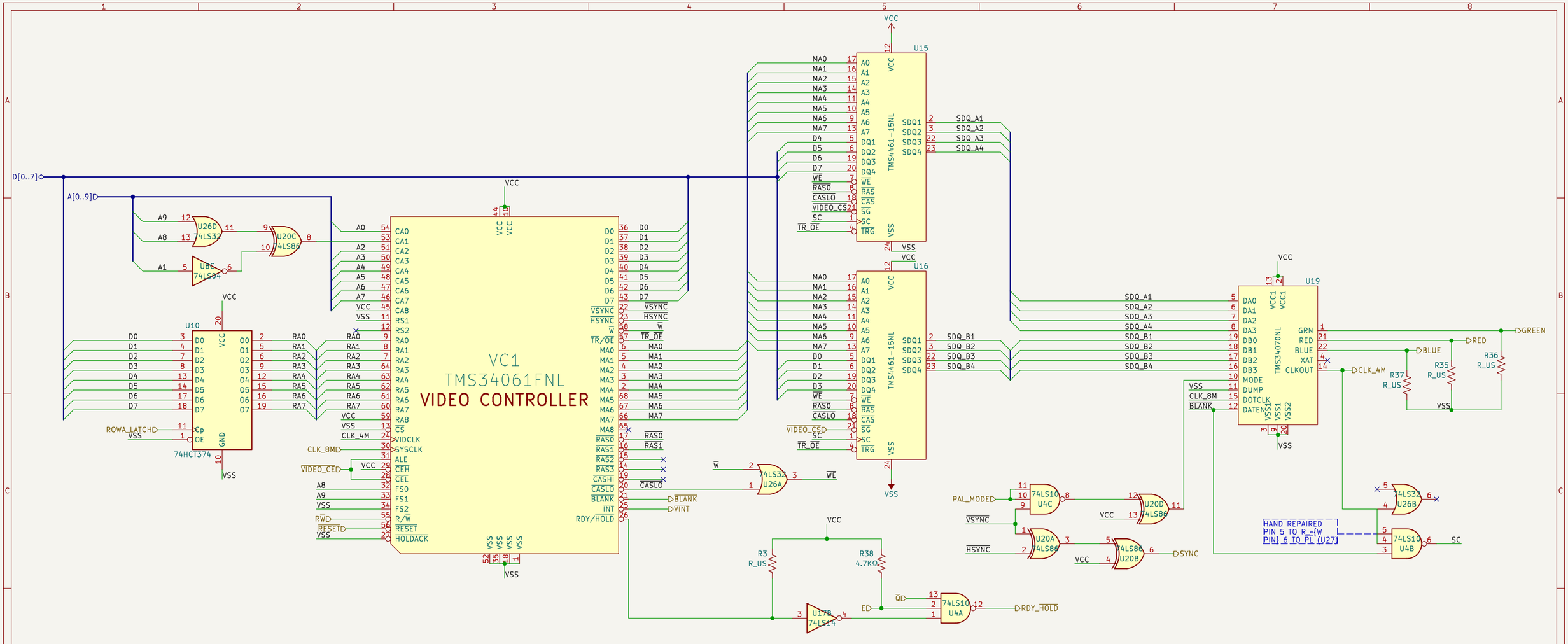

NOT POPULATED

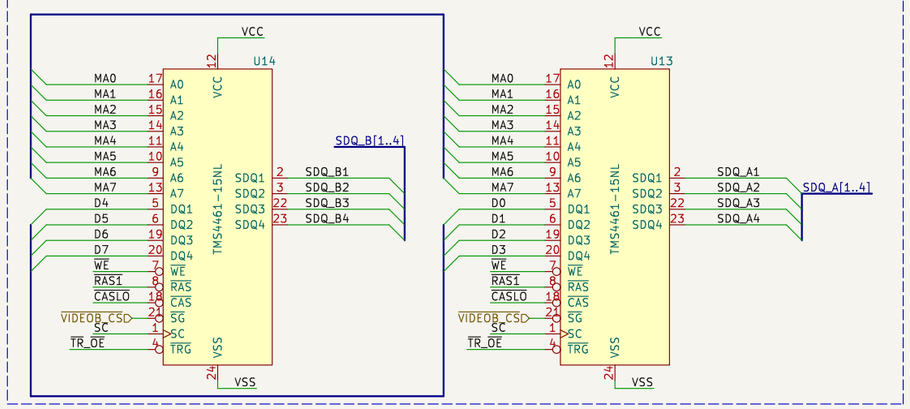

U20E
74LS86

74LS76
U3C

74LS10
U4D

JOTEGO
JOTEGO
Sheet: /video/
File: video.kicad_sch

Title: Beer Frame Bowling

Size: A3	Date: 2022-06-06	**Rev: José Tejada G.**
KiCad E.D.A. 8.0.5		Id: 2/5

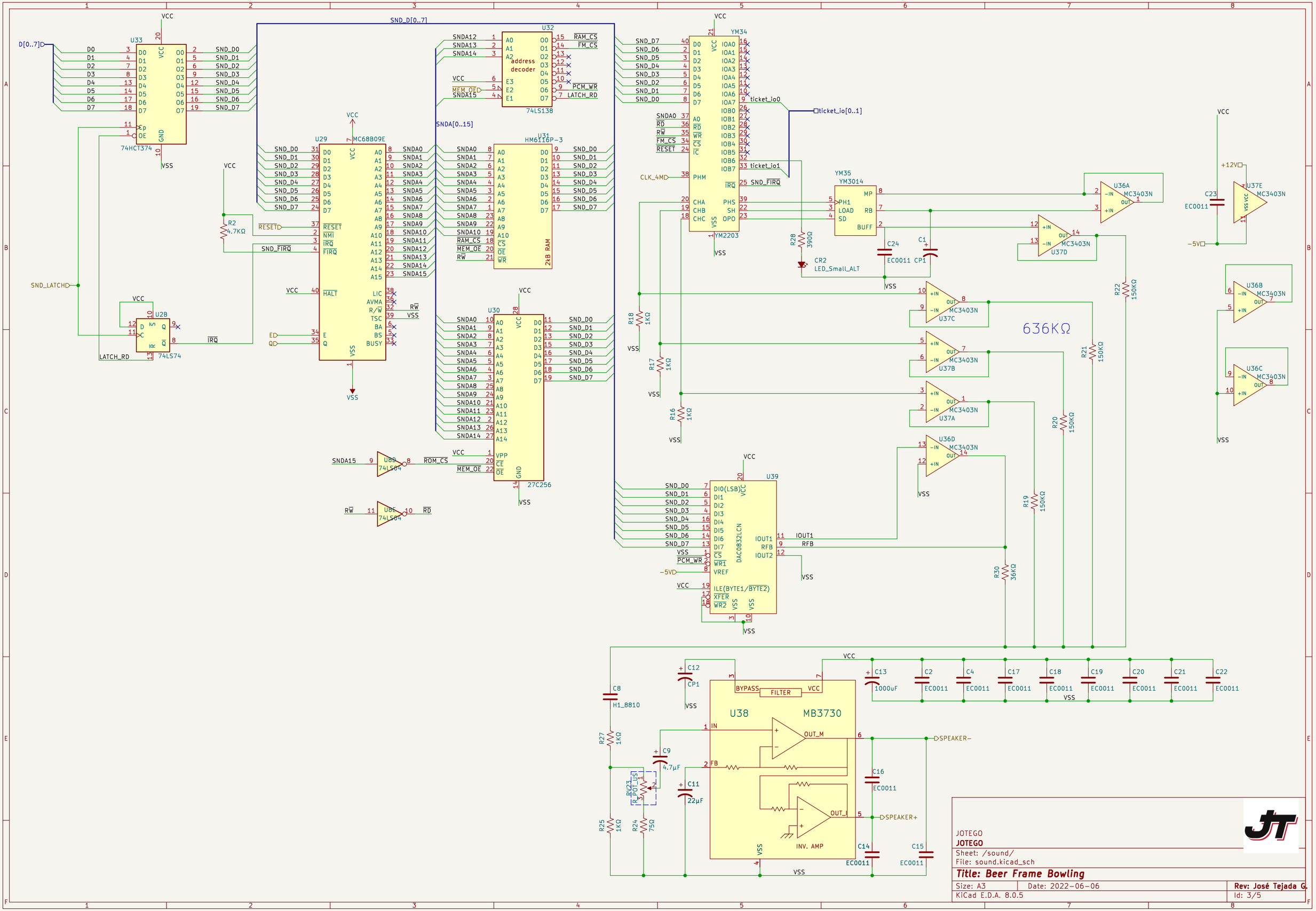
SND_D[0..7]
D[0..7]
U33
74HCT374
U29
MC68B09E
U32
74LS138
address decoder
U31
HM6116P-3
2kB RAM
U30
27C256
U2B
74LS74
U8B
74LS04
U8E
74LS04
SNDA[0..15]
U34
YM2203
U35
YM3014
U36A
U36B
U36C
U36D
U37A
U37B
U37C
U37D
U37E
MC3403N
636KΩ
U39
DAC0832LCN
U38
MB3730
FILTER
INV. AMP
SPEAKER−
SPEAKER+
JOTEGO
Sheet: /sound/
File: sound.kicad_sch
Title: Beer Frame Bowling
Size: A3
Date: 2022-06-06
Rev: José Tejada G.
KiCad E.D.A. 8.0.5
Id: 3/5

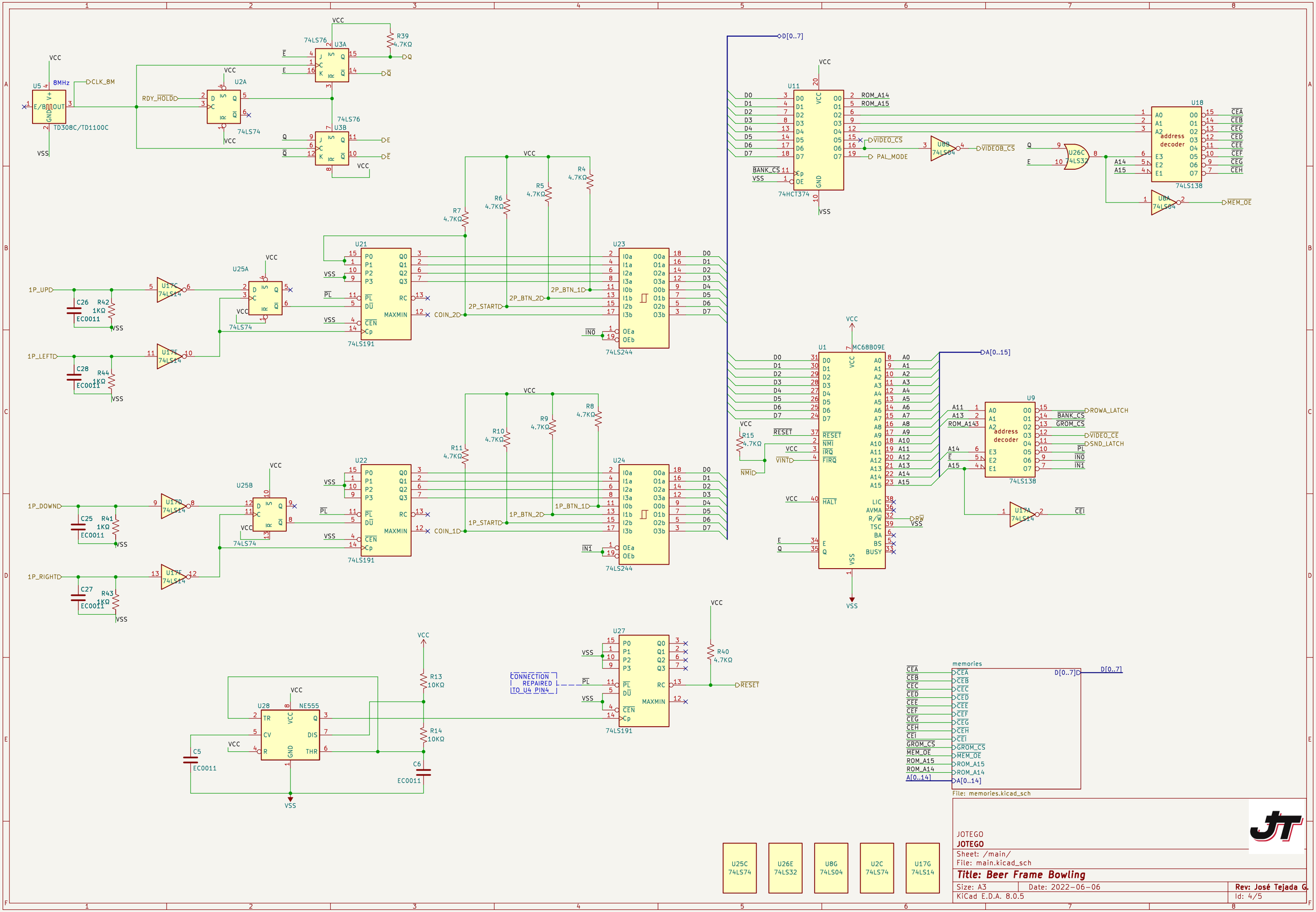
U5
8MHz
CLK_8M
TD308C/TD1100C
VCC
VSS
U2A
74LS74
RDY_HOLD
74LS76
U3A
U3B
R39
4.7KΩ
U11
74HCT374
ROM_A14
ROM_A15
VIDEO_CS
PAL_MODE
BANK_CS
U8B
74LS04
VIDEOB_CS
U26C
74LS32
U18
address decoder
74LS138
CEA
CEB
CEC
CED
CEE
CEF
CEG
CEH
U8A
MEM_OE
R4
4.7KΩ
R5
4.7KΩ
R6
4.7KΩ
R7
4.7KΩ
U21
74LS191
MAXMIN
U23
74LS244
2P_BTN_2
2P_BTN_1
2P_STARTD
COIN_2
IN0
1P_UP
1P_LEFT
1P_DOWN
1P_RIGHT
C26
C28
C25
C27
R42
R44
R41
R43
1KΩ
EC0011
U17C
U17E
U17D
U17F
74LS14
U25A
U25B
R8
4.7KΩ
R9
4.7KΩ
R10
4.7KΩ
R11
4.7KΩ
U22
U24
1P_BTN_2
1P_BTN_1
1P_STARTD
COIN_1
IN1
D[0..7]
U1
MC68B09E
RESET
NMI
IRQ
FIRQ
HALT
LIC
AVMA
R/W
TSC
BA
BS
BUSY
R15
4.7KΩ
VINT
A[0..15]
U9
address decoder
ROWA_LATCH
BANK_CS
GROM_CS
VIDEO_CE
SND_LATCH
IN0
IN1
CEI
U17A
U28
NE555
TR
CV
R
Q
DIS
THR
GND
C5
C6
R13
10KΩ
R14
10KΩ
CONNECTION REPAIRED TO U4 PIN4
U27
R40
4.7KΩ
memories
D[0..7]
GROM_CS
MEM_OE
ROM_A15
ROM_A14
A[0..14]
File: memories.kicad_sch
U25C
74LS74
U26E
74LS32
U8G
74LS04
U2C
74LS74
U17G
74LS14
JOTEGO
JOTEGO
Sheet: /main/
File: main.kicad_sch
Title: Beer Frame Bowling
Size: A3
Date: 2022-06-06
Rev: José Tejada G.
KiCad E.D.A. 8.0.5
Id: 4/5

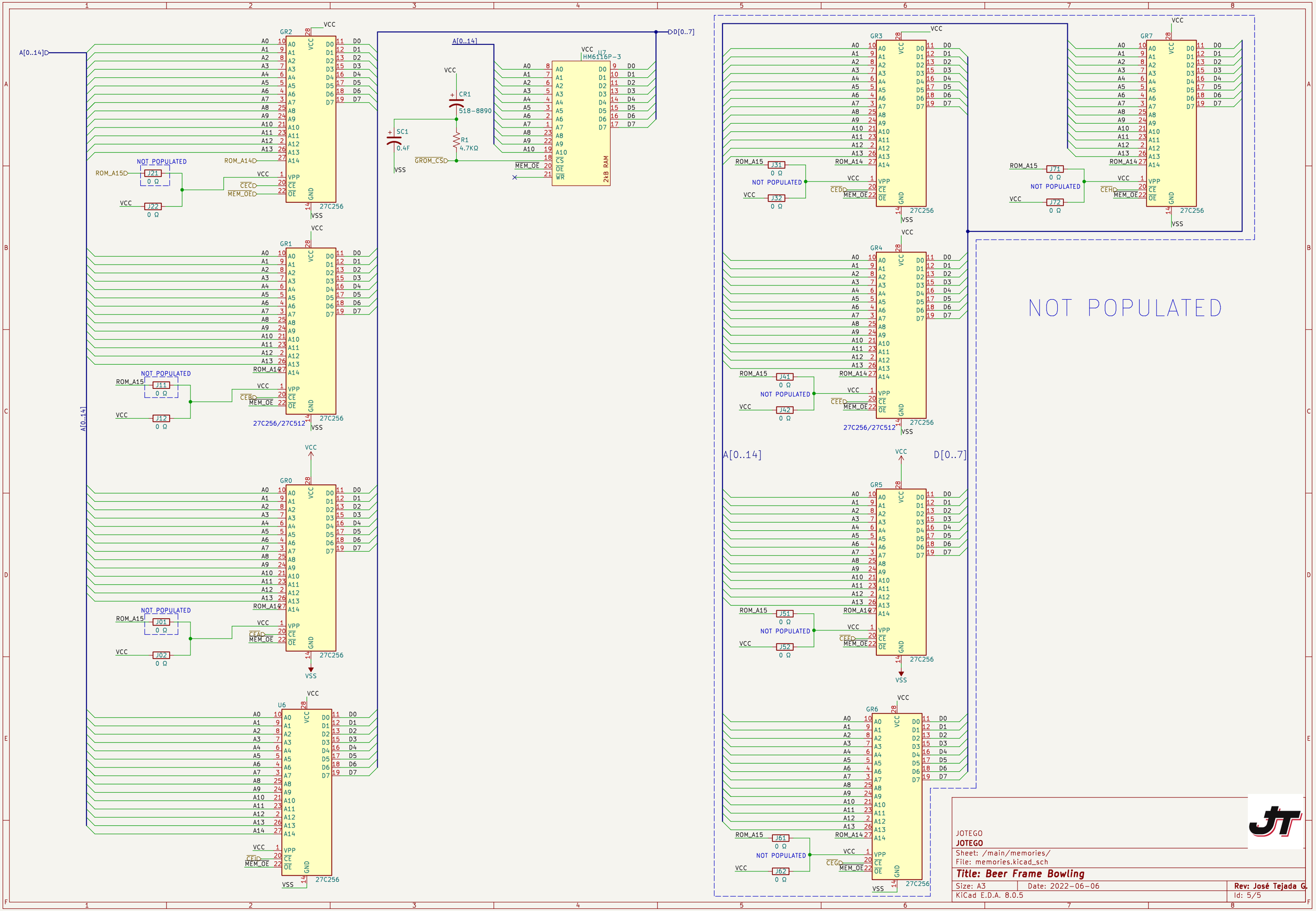

JOTEGO

JOTEGO

Sheet: /main/memories/

File: memories.kicad_sch

Title: Beer Frame Bowling

Size: A3	Date: 2022-06-06	**Rev: José Tejada G.**
KiCad E.D.A. 8.0.5		Id: 5/5