THESE SIGNALS COME FROM
SCH SIMPSONS I/O SHEET 15

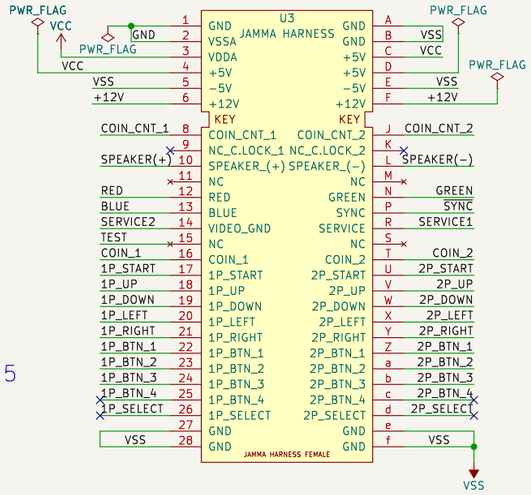

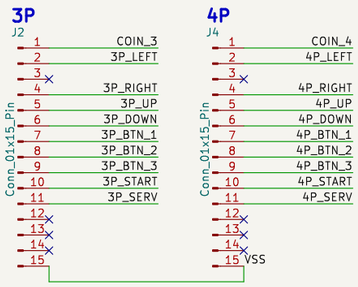

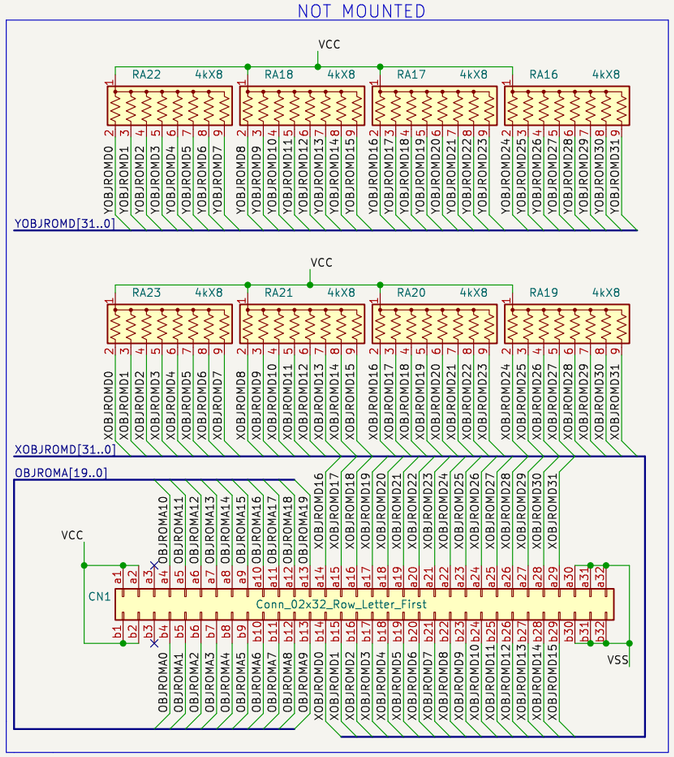

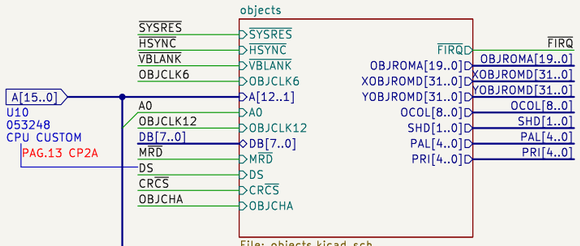

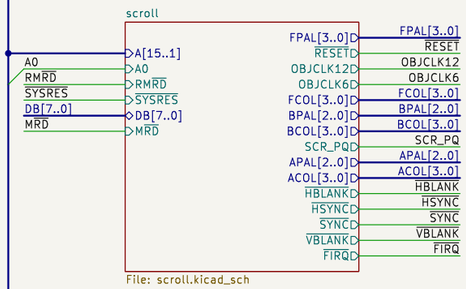

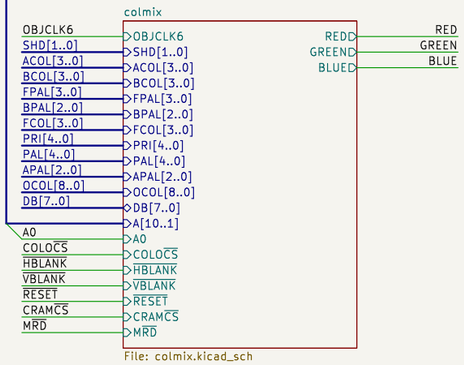

These schematics cover the missing pages in the original ones published by the maker. Signal names existing in the original pages have been preserved. New signal names try to follow the maker style or are taken from similar schematics of the same maker.

JOTEGO
www.patreon.com/jotego
github.com/jotego/jtcores/tree/master/cores/simson/sch/simpsons
KONAMI PWB352346B GX072

Sheet: /
File: simpsons.kicad_sch

Title: The Simpsons

Size: A3	Date: 2023-08-01	**Rev: José Tejada.**
KiCad E.D.A. 8.0.4		Id: 1/5

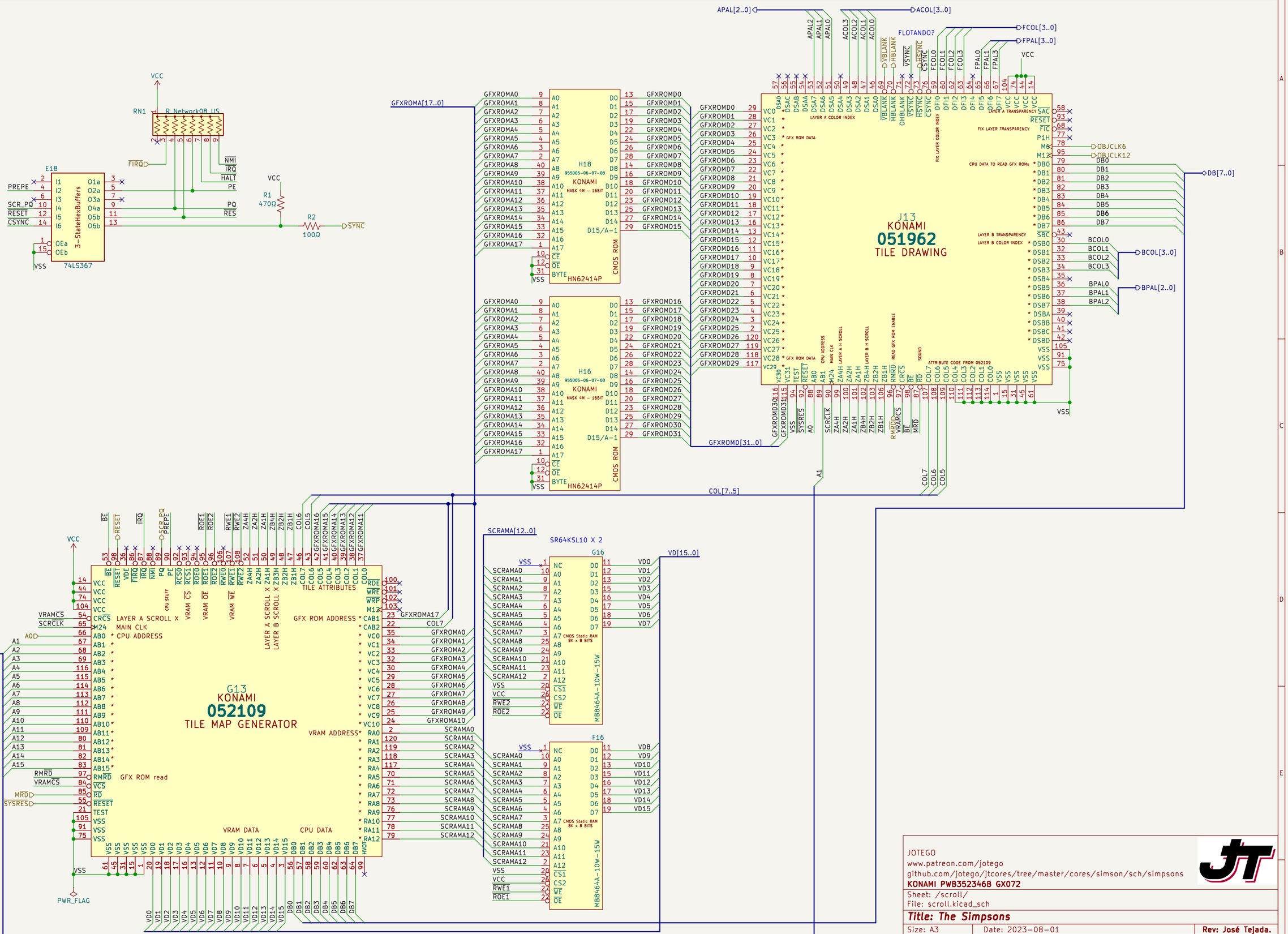

JOTEGO
www.patreon.com/jotego
github.com/jotego/jtcores/tree/master/cores/simson/sch/simpsons
KONAMI PWB352346B GX072

Sheet: /scroll/
File: scroll.kicad_sch

Title: The Simpsons

Size: A3	Date: 2023-08-01	**Rev: José Tejada.**
KiCad E.D.A. 8.0.4		Id: 2/5

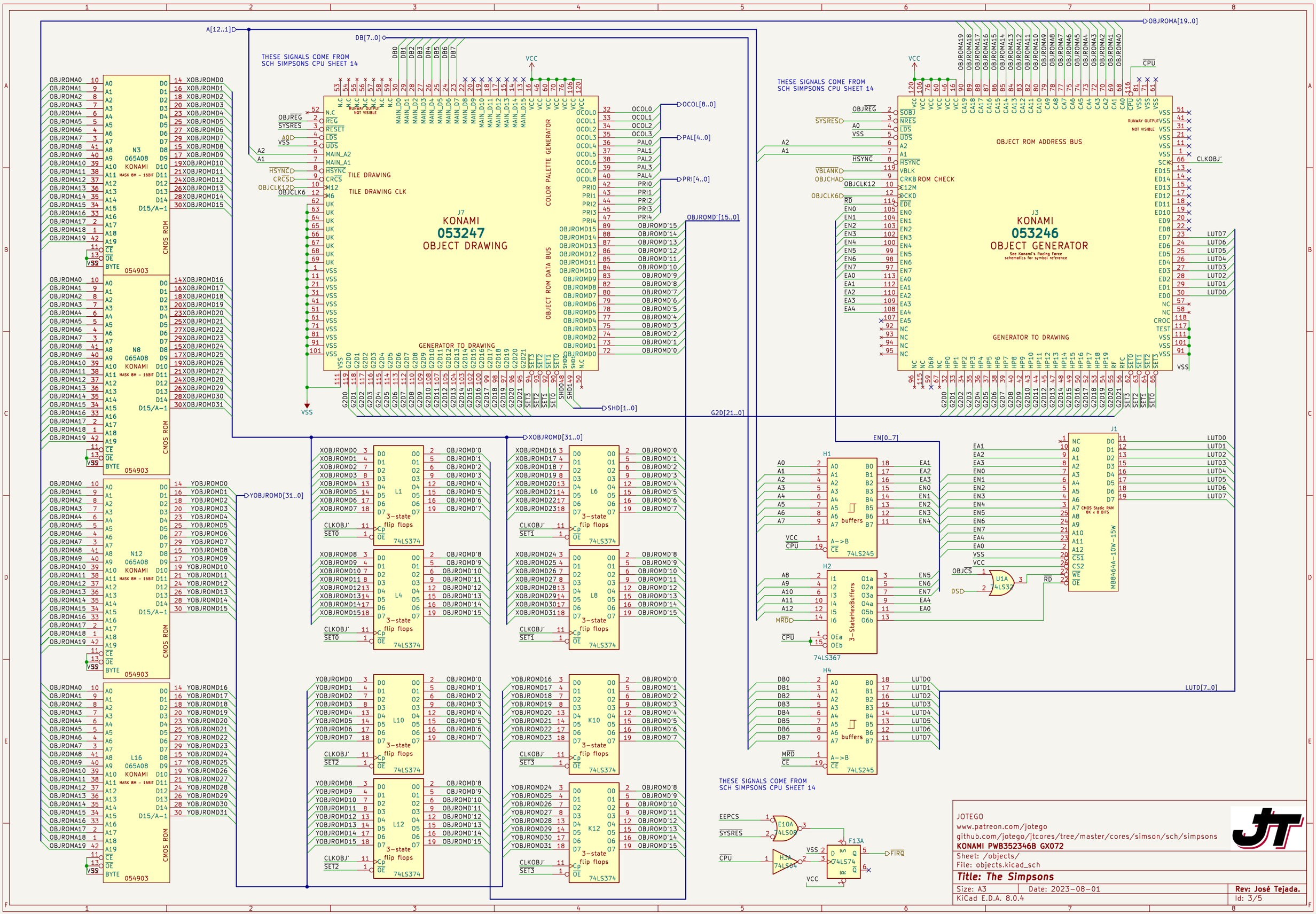
A[12..1]
DB[7..0]
OBJROMA[19..0]
THESE SIGNALS COME FROM SCH SIMPSONS CPU SHEET 14
J7
KONAMI
053247
OBJECT DRAWING
TILE DRAWING
TILE DRAWING CLK
GENERATOR TO DRAWING
COLOR PALETTE GENERATOR
OBJECT ROM DATA BUS
OCOL[8..0]
PAL[4..0]
PRI[4..0]
OBJROMD'[15..0]
SHD[1..0]
G2D[21..0]
XOBJROMD[31..0]
YOBJROMD[31..0]
J3
KONAMI
053246
OBJECT GENERATOR
See Konami's Racing Force schematics for symbol reference
OBJECT ROM ADDRESS BUS
ROM CHECK
GENERATOR TO DRAWING
CLKOBJ'
LUTD[7..0]
EN[0..7]
THESE SIGNALS COME FROM SCH SIMPSONS CPU SHEET 14
N3 065A08 KONAMI MASK 8M - 16BIT
N8 065A08 KONAMI MASK 8M - 16BIT
N12 065A08 KONAMI MASK 8M - 16BIT
L16 065A08 KONAMI MASK 8M - 16BIT
CMOS ROM
054903
L1
L4
L10
L12
L6
L8
K10
K12
3-state flip flops
74LS374
H1
H2
H4
74LS245
74LS367
J1
CMOS Static RAM 8K x 8 BITS
MB8464A-10W-15W
JOTEGO
www.patreon.com/jotego
github.com/jotego/jtcores/tree/master/cores/simson/sch/simpsons
KONAMI PWB352346B GX072
Sheet: /objects/
File: objects.kicad_sch
Title: The Simpsons
Size: A3
Date: 2023-08-01
Rev: José Tejada.
KiCad E.D.A. 8.0.4
Id: 3/5

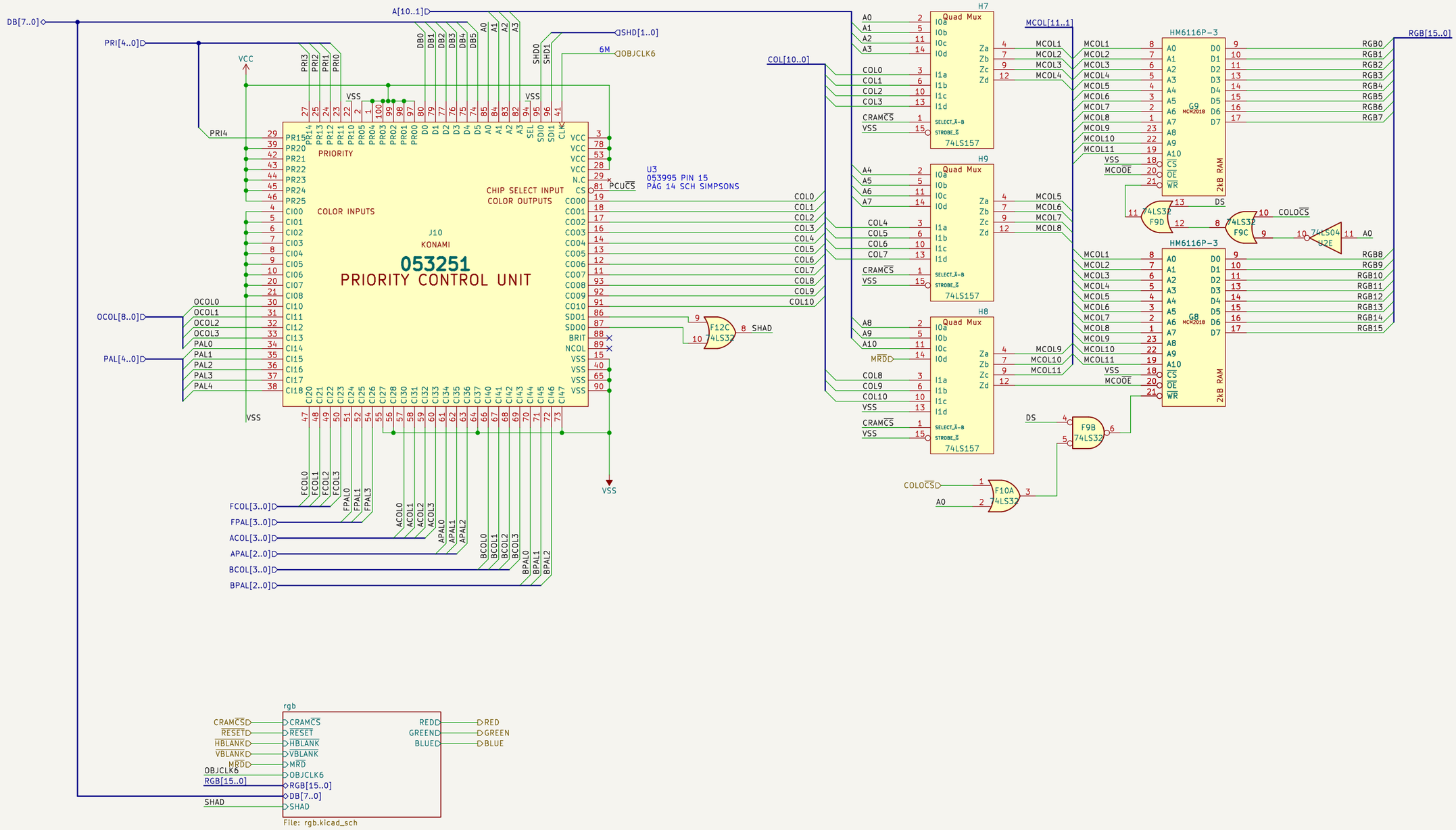

JOTEGO
www.patreon.com/jotego
github.com/jotego/jtcores/tree/master/cores/simson/sch/simpsons
KONAMI PWB352346B GX072

Sheet: /colmix/
File: colmix.kicad_sch

Title: The Simpsons

Size: A3	Date: 2023-08-01	**Rev: José Tejada.**
KiCad E.D.A. 8.0.4		Id: 4/5

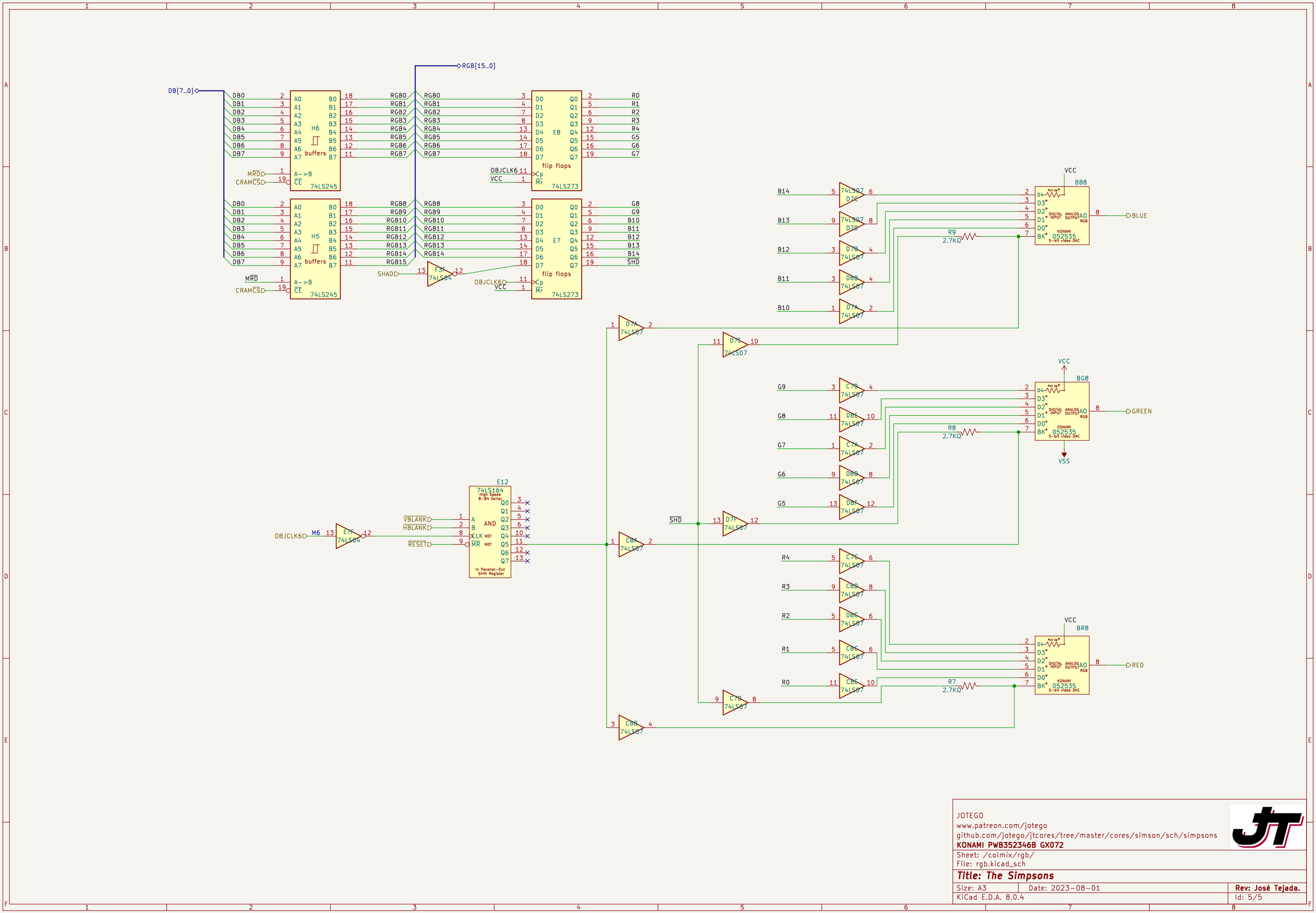

JOTEGO
www.patreon.com/jotego
github.com/jotego/jtcores/tree/master/cores/simson/sch/simpsons
KONAMI PWB352346B GX072

Sheet: /colmix/rgb/
File: rgb.kicad_sch

Title: The Simpsons

Size: A3	Date: 2023-08-01	**Rev: José Tejada.**
KiCad E.D.A. 8.0.4		Id: 5/5