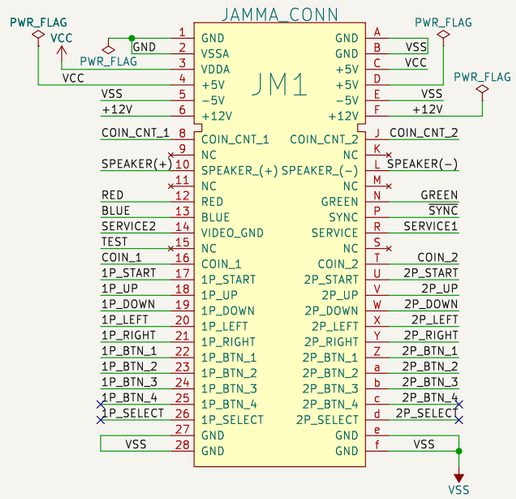

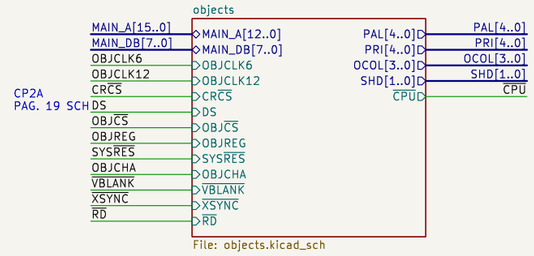

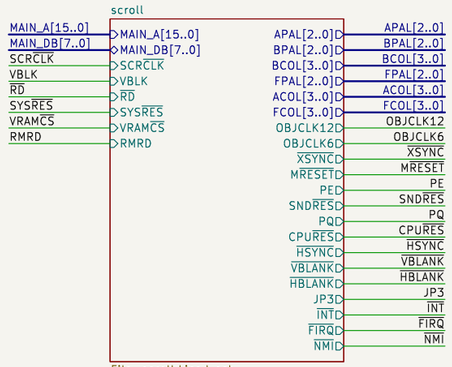

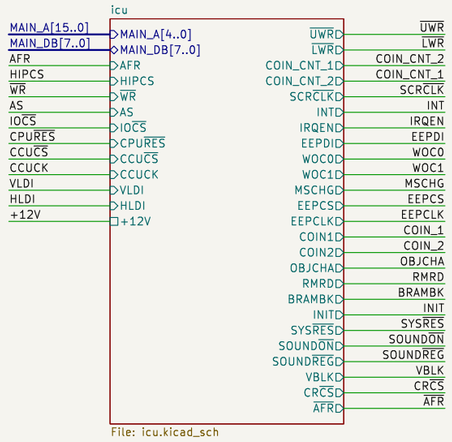

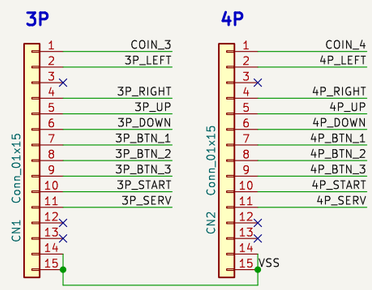

These schematics cover the missing pages in the original ones published by the maker. Signal names existing in the original pages have been preserved. New signal names try to follow the maker style or are taken from similar schematics of the same maker.

www.patreon.com/jotego
github.com/jotego/jtcores/tree/master/cores/simson/sch/vendetta
JOTEGO
KONAMI PWB352292A

Sheet: /
File: vendetta.kicad_sch

Title: Vendetta

Size: A3	Date: 2023-08-09	**Rev: José Tejada G.**
KiCad E.D.A. 8.0.4		Id: 1/4

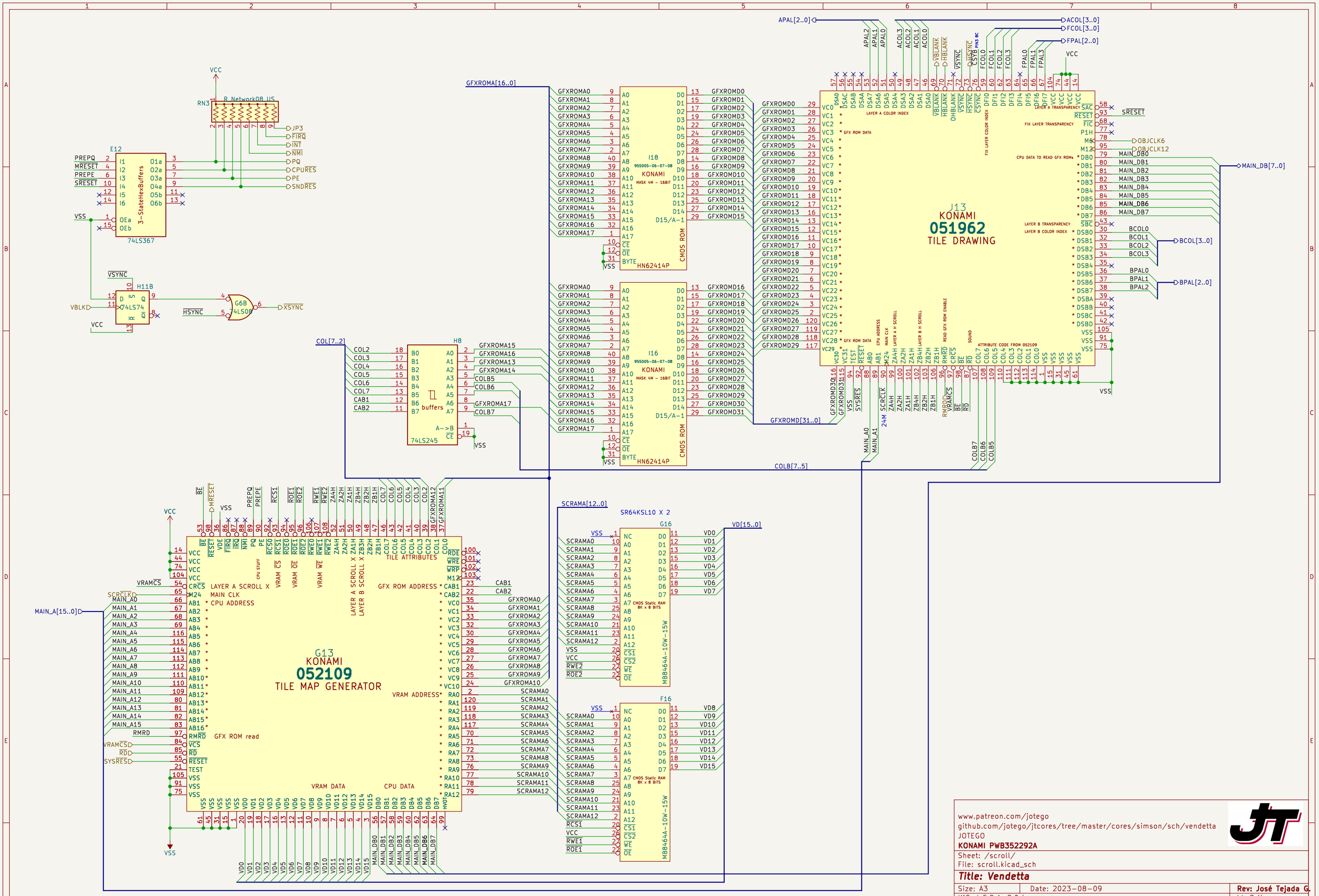

www.patreon.com/jotego
github.com/jotego/jtcores/tree/master/cores/simson/sch/vendetta
JOTEGO
KONAMI PWB352292A

Sheet: /scroll/
File: scroll.kicad_sch

Title: Vendetta

Size: A3	Date: 2023-08-09	**Rev: José Tejada G.**
KiCad E.D.A. 8.0.4		Id: 2/4

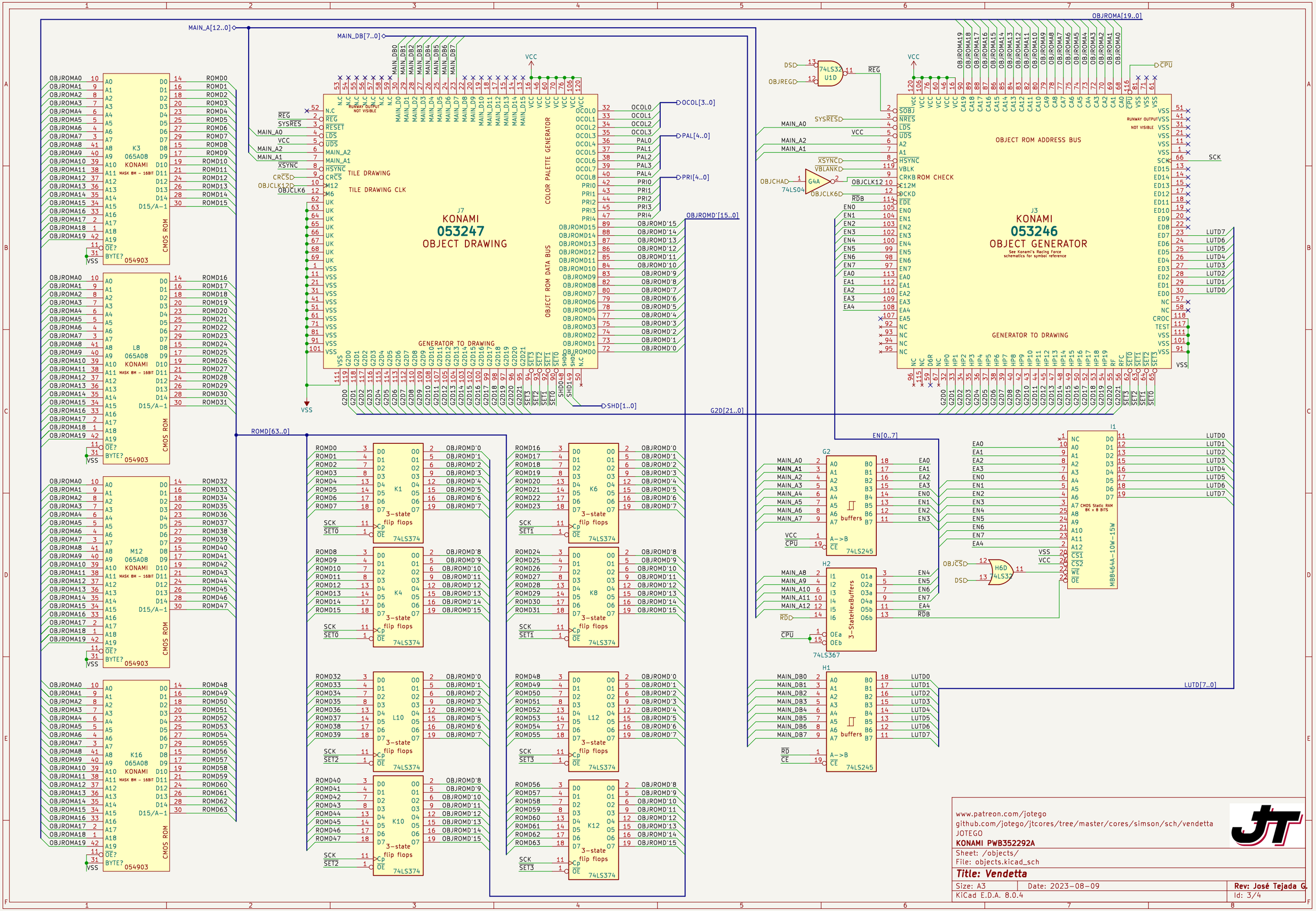

www.patreon.com/jotego
github.com/jotego/jtcores/tree/master/cores/simson/sch/vendetta
JOTEGO
KONAMI PWB352292A

Sheet: /objects/
File: objects.kicad_sch

Title: Vendetta

Size: A3	Date: 2023-08-09	Rev: José Tejada G.
KiCad E.D.A. 8.0.4		Id: 3/4

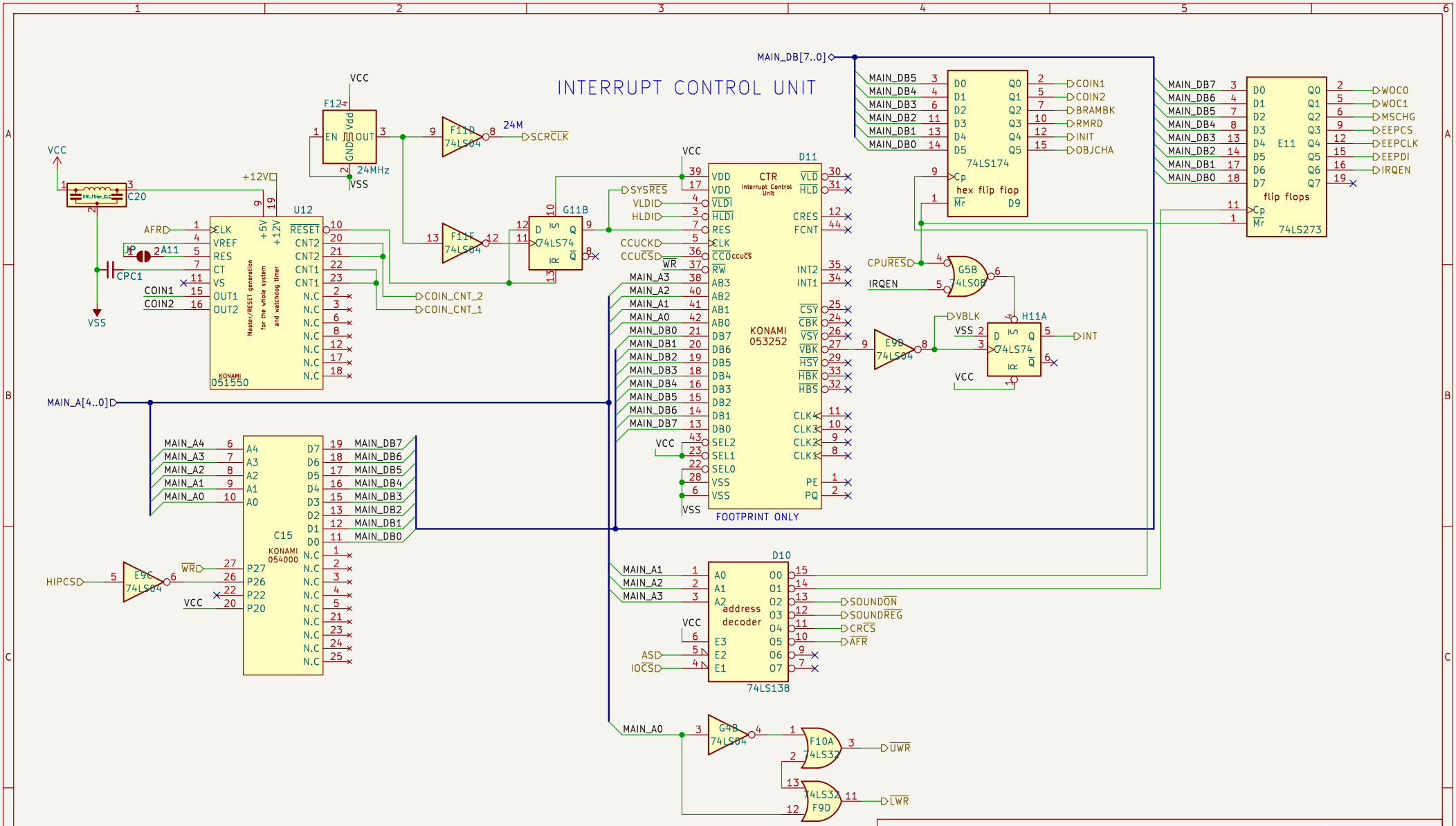

www.patreon.com/jotego
github.com/jotego/jtcores/tree/master/cores/simson/sch/vendetta
JOTEGO
KONAMI PWB352292A

Sheet: /icu/
File: icu.kicad_sch

Title: Vendetta

Size: A4	Date: 2023-08-09	**Rev: José Tejada G.**
KiCad E.D.A. 8.0.4		Id: 4/4