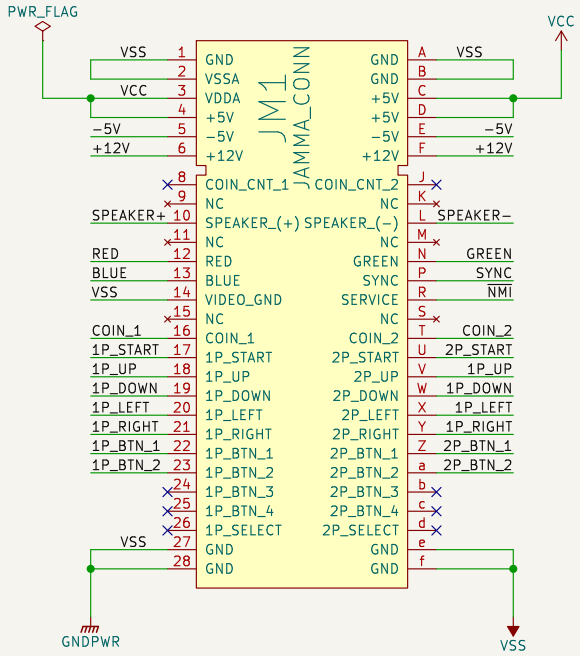

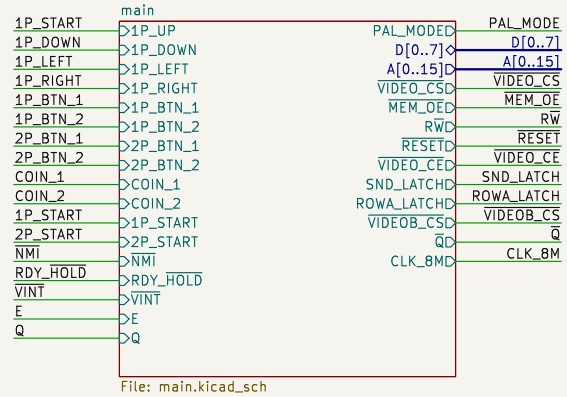

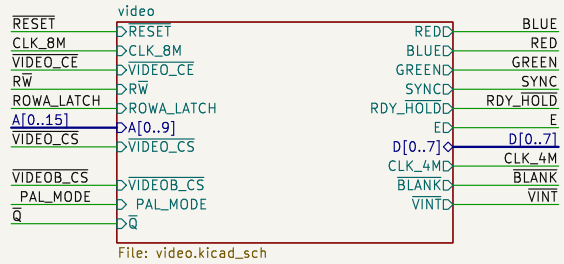

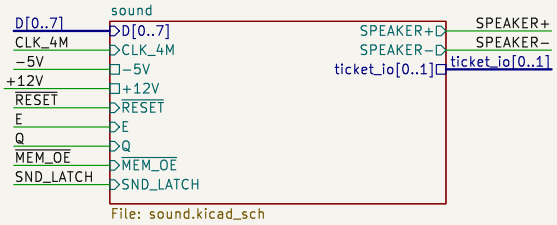

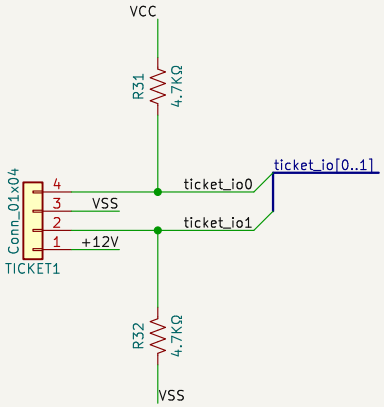

JOTEGO

JOTEGO

Sheet: /

File: bowl.kicad_sch

Title: Beer Frame Bowling

Size: A4	Date: 2022-06-06	**Rev: José Tejada G.**
KiCad E.D.A. 8.0.6		Id: 1/5

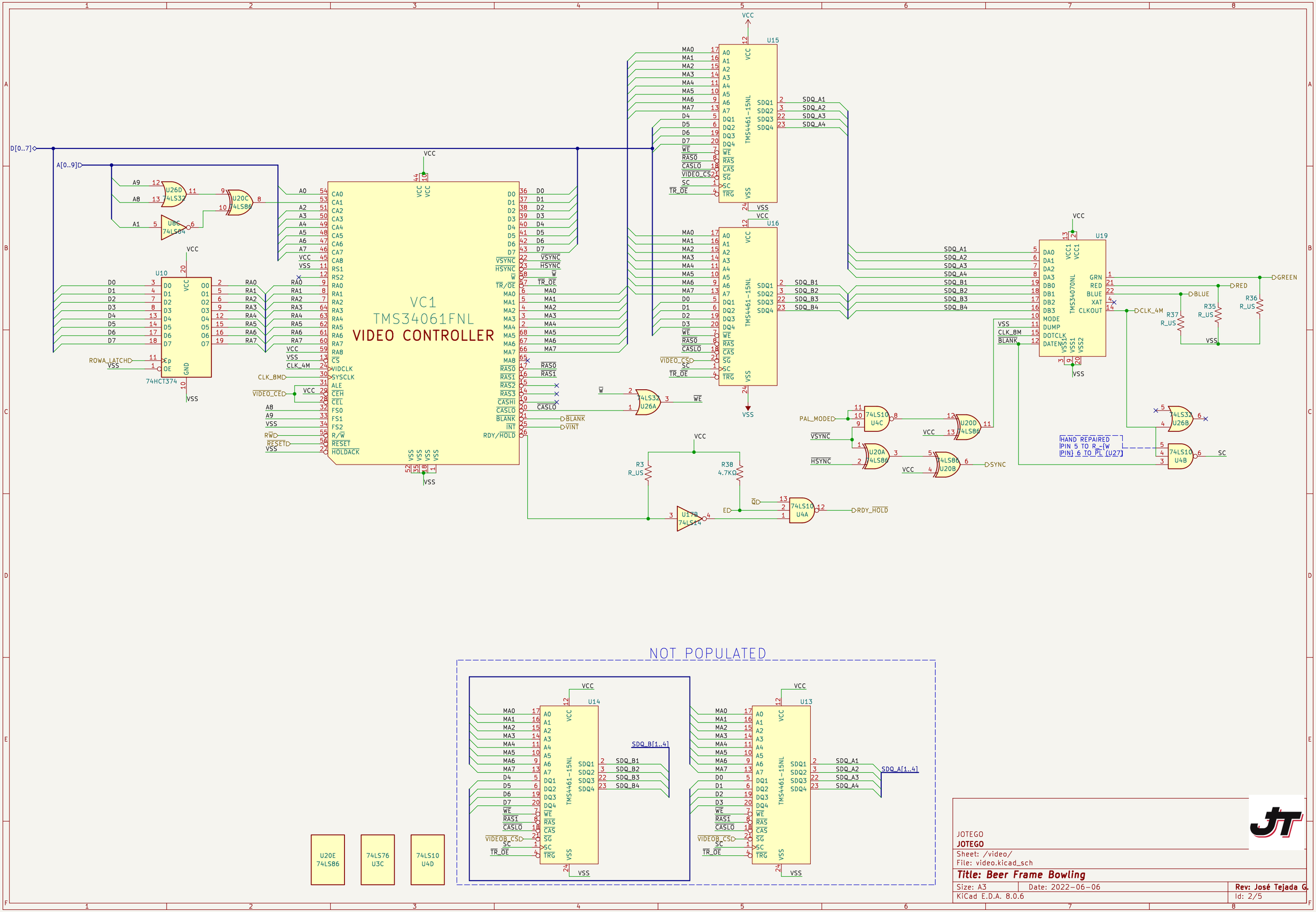

JOTEGO
JOTEGO
Sheet: /video/
File: video.kicad_sch

Title: Beer Frame Bowling

Size: A3	Date: 2022-06-06	**Rev: José Tejada G.**
KiCad E.D.A. 8.0.6		Id: 2/5

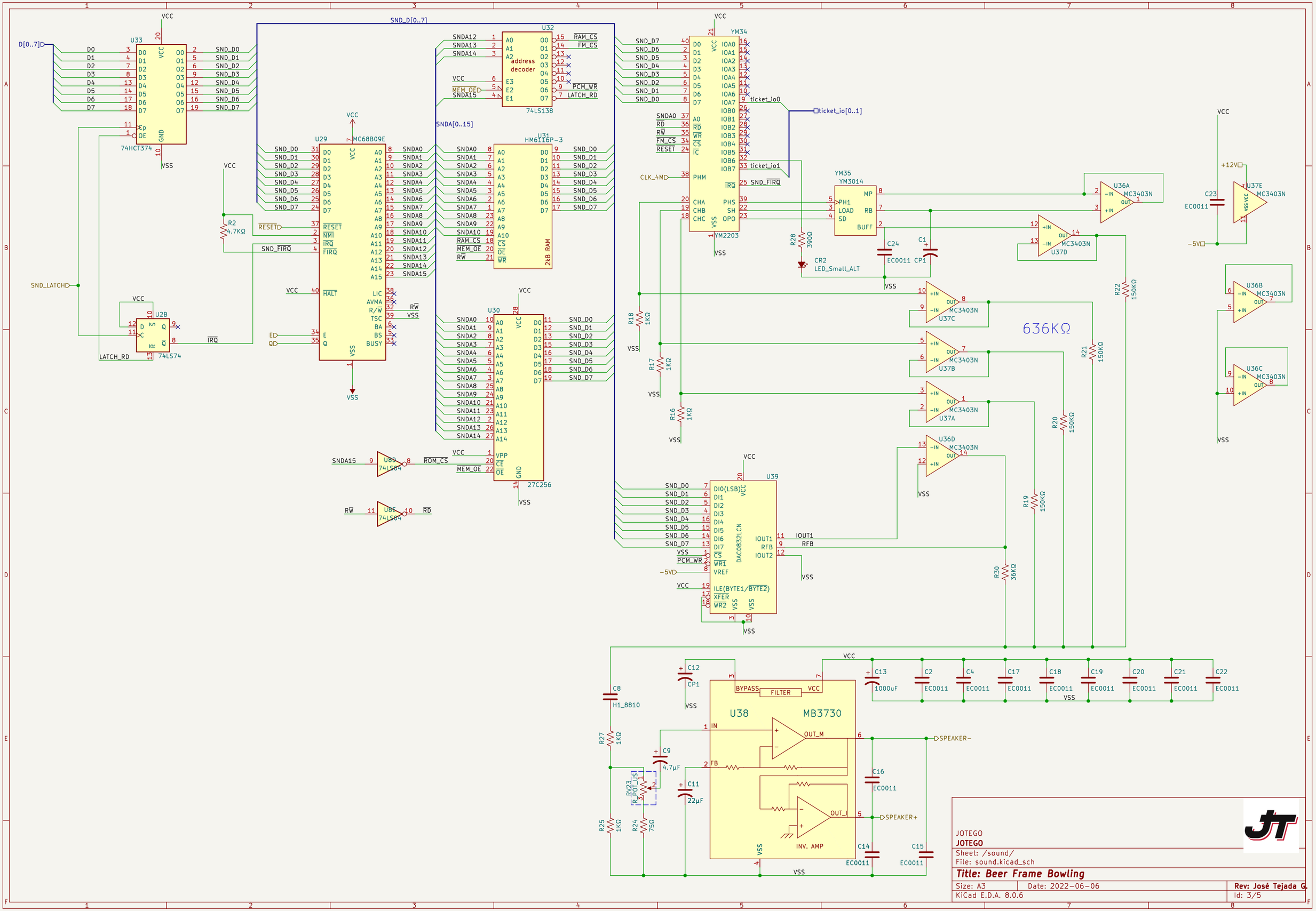
SND_D[0..7]
D[0..7]
U33
74HCT374
U29
MC68B09E
U32
74LS138
address decoder
U31
HM6116P-3
2kB RAM
U30
27C256
U2B
74LS74
U8B
74LS04
U8E
74LS04
SNDA[0..15]
YM34
YM2203
YM35
YM3014
U39
DAC0832LCN
U36A
U36B
U36C
U36D
U37A
U37B
U37C
U37D
U37E
MC3403N
636KΩ
U38
MB3730
FILTER
INV. AMP
SPEAKER−
SPEAKER+
ticket_io[0..1]
CR2
LED_Small_ALT
JOTEGO
JOTEGO
Sheet: /sound/
File: sound.kicad_sch
Title: Beer Frame Bowling
Size: A3
Date: 2022-06-06
Rev: José Tejada G.
KiCad E.D.A. 8.0.6
Id: 3/5

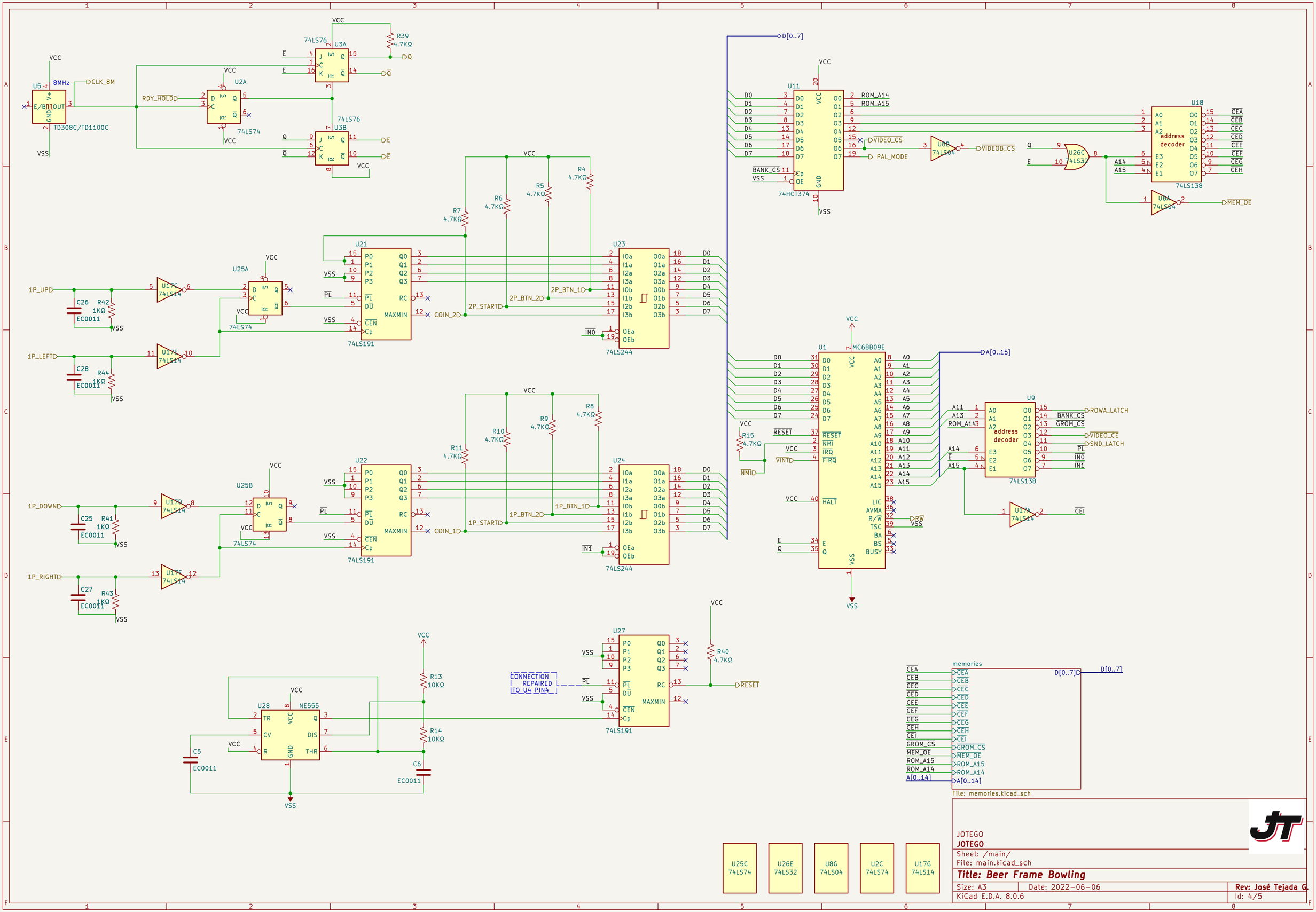
U5
8MHz
CLK_8M
TD308C/TD1100C
VCC
VSS
U2A
74LS74
RDY_HOLD
U3A
U3B
74LS76
R39
4.7KΩ
U11
74HCT374
ROM_A14
ROM_A15
VIDEO_CS
PAL_MODE
BANK_CS
U8B
74LS04
VIDEOB_CS
U26C
74LS32
U18
address decoder
74LS138
CEA
CEB
CEC
CED
CEE
CEF
CEG
CEH
U8A
MEM_OE
D[0..7]
U21
U23
U22
U24
U25A
U25B
U17C
U17D
U17E
U17F
74LS14
1P_UP
1P_LEFT
1P_DOWN
1P_RIGHT
C26
C28
C25
C27
R42
R44
R41
R43
1KΩ
EC0011
R4
R5
R6
R7
R8
R9
R10
R11
2P_BTN_1
2P_BTN_2
2P_START
1P_BTN_1
1P_BTN_2
1P_START
COIN_2
COIN_1
IN0
IN1
74LS191
MAXMIN
74LS244
U1
MC68B09E
RESET
NMI
IRQ
FIRQ
HALT
LIC
AVMA
R/W
TSC
BA
BS
BUSY
R15
VINT
NMI
A[0..15]
U9
address decoder
74LS138
ROWA_LATCH
BANK_CS
GROM_CS
VIDEO_CE
SND_LATCH
PL
IN0
IN1
CEI
U27
CONNECTION REPAIRED TO U4 PIN4
R40
4.7KΩ
U28
NE555
TR
CV
R
Q
DIS
THR
GND
R13
10KΩ
R14
10KΩ
C5
C6
EC0011
memories
D[0..7]
GROM_CS
MEM_OE
ROM_A15
ROM_A14
A[0..14]
File: memories.kicad_sch
U25C
74LS74
U26E
74LS32
U8G
74LS04
U2C
74LS74
U17G
74LS14
JOTEGO
JOTEGO
Sheet: /main/
File: main.kicad_sch
Title: Beer Frame Bowling
Size: A3
Date: 2022-06-06
Rev: José Tejada G.
KiCad E.D.A. 8.0.6
Id: 4/5

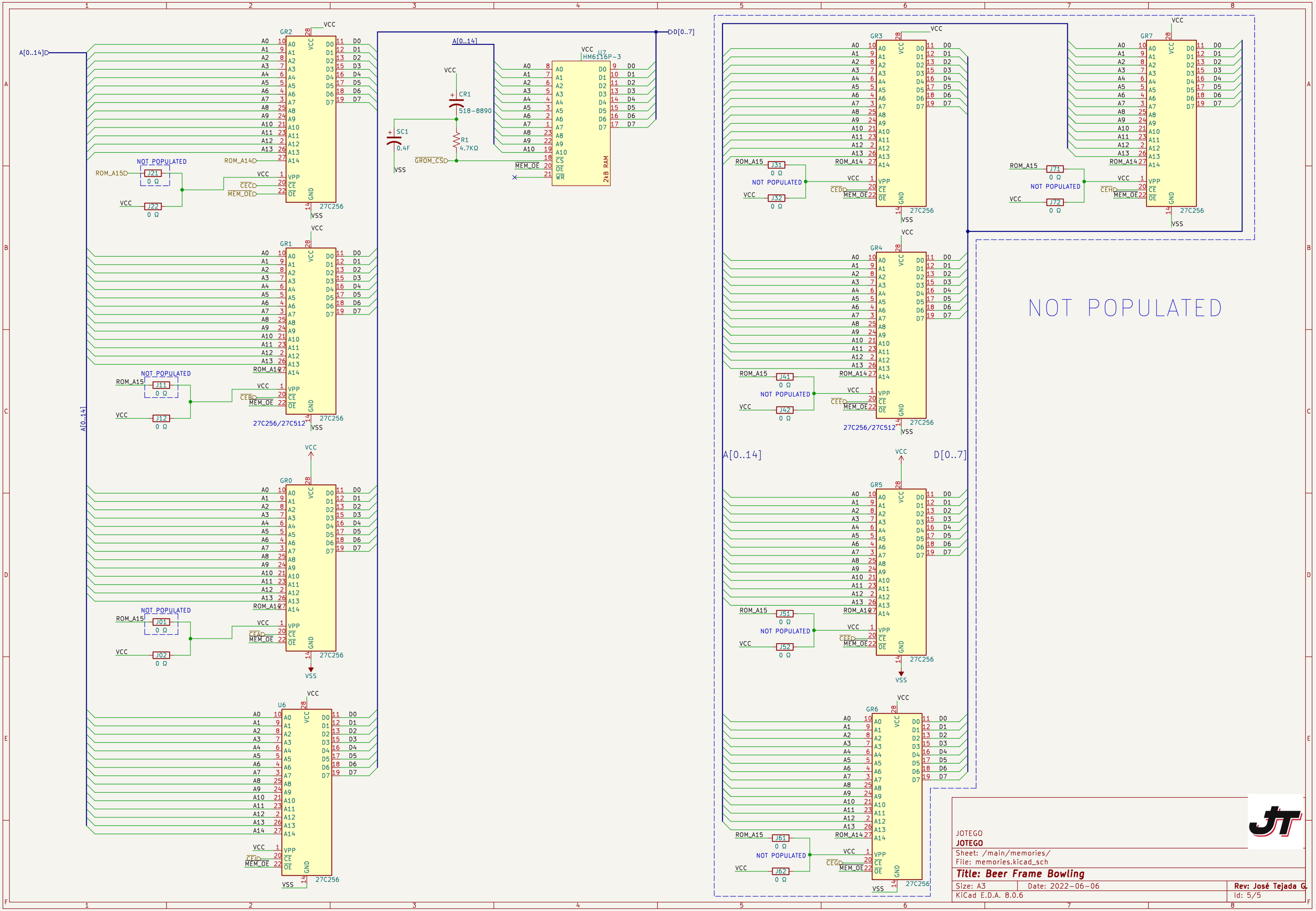

JOTEGO

JOTEGO

Sheet: /main/memories/

File: memories.kicad_sch

Title: Beer Frame Bowling

Size: A3	Date: 2022-06-06	**Rev: José Tejada G.**
KiCad E.D.A. 8.0.6		Id: 5/5