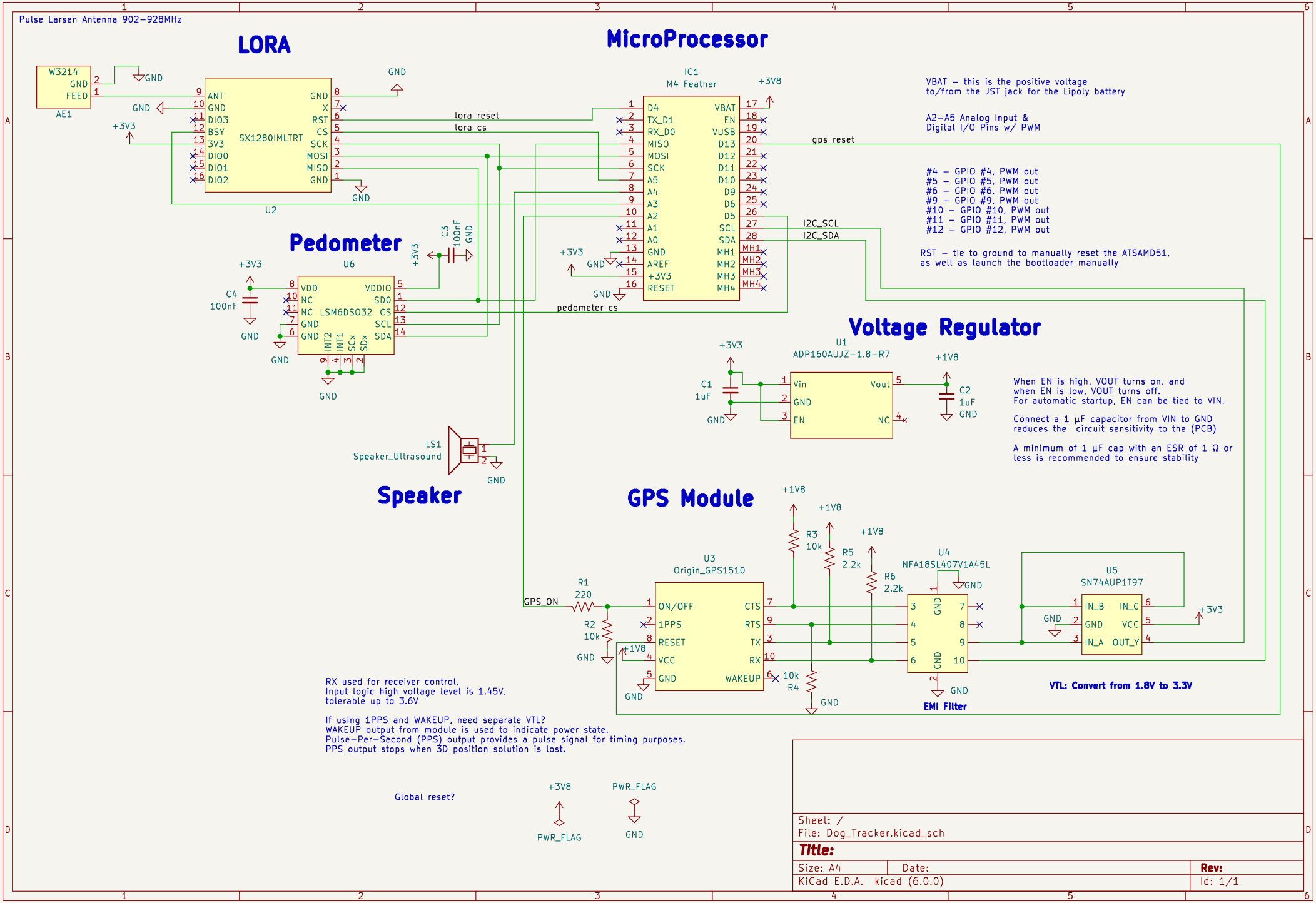
Pulse Larsen Antenna 902-928MHz
LORA
MicroProcessor
W3214
GND
FEED
AE1
GND
+3V3
ANT
GND
DIO3
BSY
3V3
DIO0
DIO1
DIO2
SX1280IMLTRT
X
RST
CS
SCK
MOSI
MISO
U2
lora reset
lora cs
IC1
M4 Feather
+3V8
D4
TX_D1
RX_D0
MISO
MOSI
SCK
A5
A4
A3
A2
A1
A0
AREF
RESET
VBAT
EN
VUSB
D13
D12
D11
D10
D9
D6
D5
SCL
SDA
MH1
MH2
MH3
MH4
gps reset
I2C_SCL
I2C_SDA
pedometer cs
VBAT - this is the positive voltage
to/from the JST jack for the Lipoly battery
A2-A5 Analog Input &
Digital I/O Pins w/ PWM
#4 - GPIO #4, PWM out
#5 - GPIO #5, PWM out
#6 - GPIO #6, PWM out
#9 - GPIO #9, PWM out
#10 - GPIO #10, PWM out
#11 - GPIO #11, PWM out
#12 - GPIO #12, PWM out
RST - tie to ground to manually reset the ATSAMD51,
as well as launch the bootloader manually
Pedometer
U6
C3
100nF
C4
100nF
VDD
NC
GND
VDDIO
SDO
CS
SCL
SDA
LSM6DSO32
INT2
INT1
SCx
SDx
Voltage Regulator
U1
ADP160AUJZ-1.8-R7
+1V8
C1
1uF
C2
1uF
Vin
Vout
EN
NC
When EN is high, VOUT turns on, and
when EN is low, VOUT turns off.
For automatic startup, EN can be tied to VIN.
Connect a 1 µF capacitor from VIN to GND
reduces the circuit sensitivity to the (PCB)
A minimum of 1 µF cap with an ESR of 1 Ω or
less is recommended to ensure stability
LS1
Speaker_Ultrasound
Speaker
GPS Module
U3
Origin_GPS1510
GPS_ON
R1
220
R2
10k
R3
10k
R4
10k
R5
2.2k
R6
2.2k
ON/OFF
1PPS
RESET
VCC
CTS
RTS
TX
RX
WAKEUP
U4
NFA18SL407V1A45L
EMI Filter
U5
SN74AUP1T97
IN_B
IN_C
IN_A
OUT_Y
VTL: Convert from 1.8V to 3.3V
RX used for receiver control.
Input logic high voltage level is 1.45V,
tolerable up to 3.6V
If using 1PPS and WAKEUP, need separate VTL?
WAKEUP output from module is used to indicate power state.
Pulse-Per-Second (PPS) output provides a pulse signal for timing purposes.
PPS output stops when 3D position solution is lost.
Global reset?
PWR_FLAG
Sheet: /
File: Dog_Tracker.kicad_sch
Title:
Size: A4
Date:
Rev:
KiCad E.D.A. kicad (6.0.0)
Id: 1/1