What is FPD-Link?

TI Precision Labs - FPD-Link

Prepared and presented by Casey McCrea

What is FPD-Link?

Infotainment FPD-Link

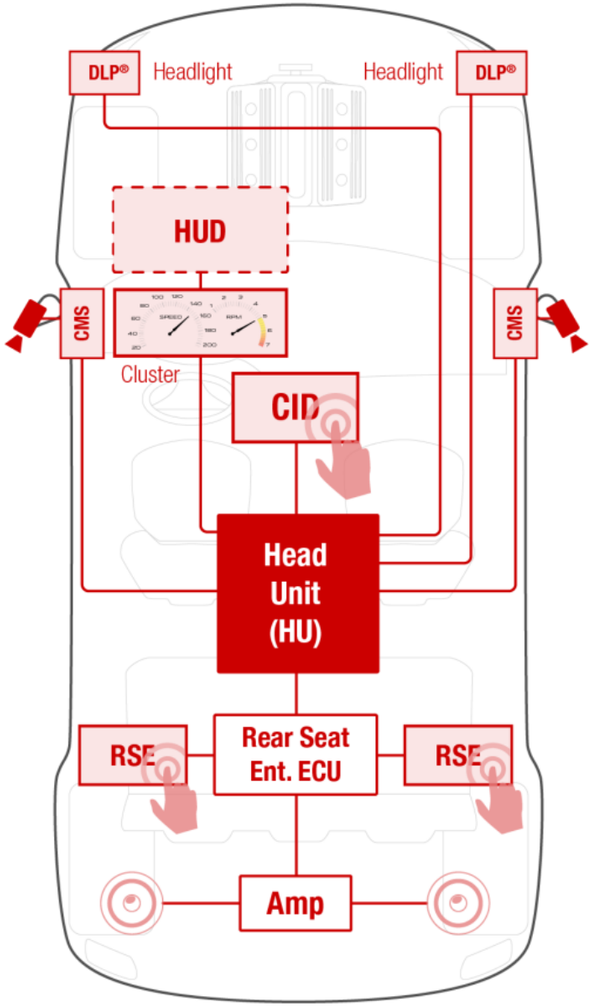

ADAS FPD-Link

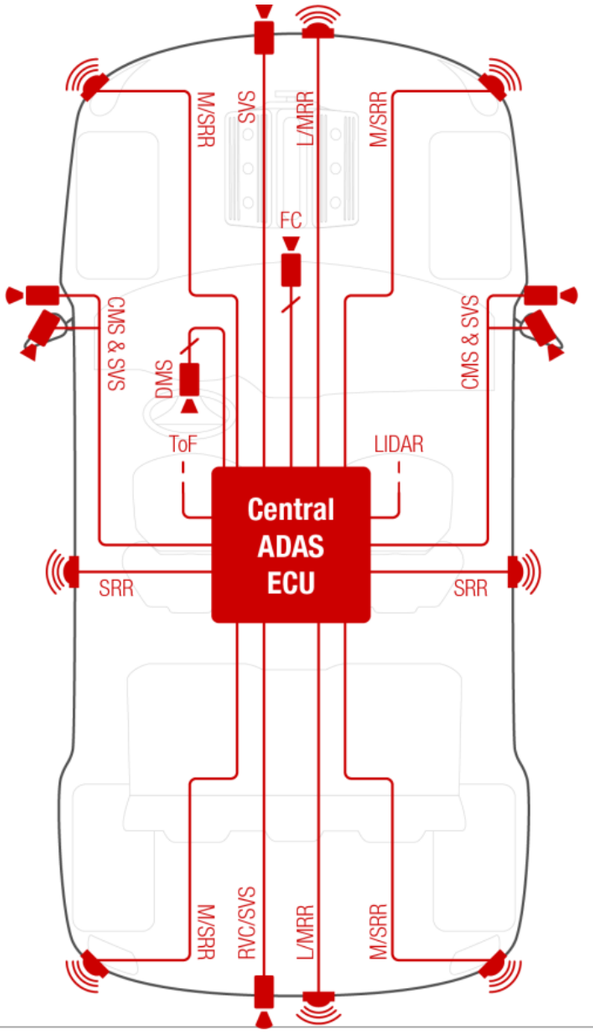

Data interface standards

- HDMI
- LVDS
- Parallel LVCMOS
- MIPI CSI-2
- MIPI DSI
- Etc.

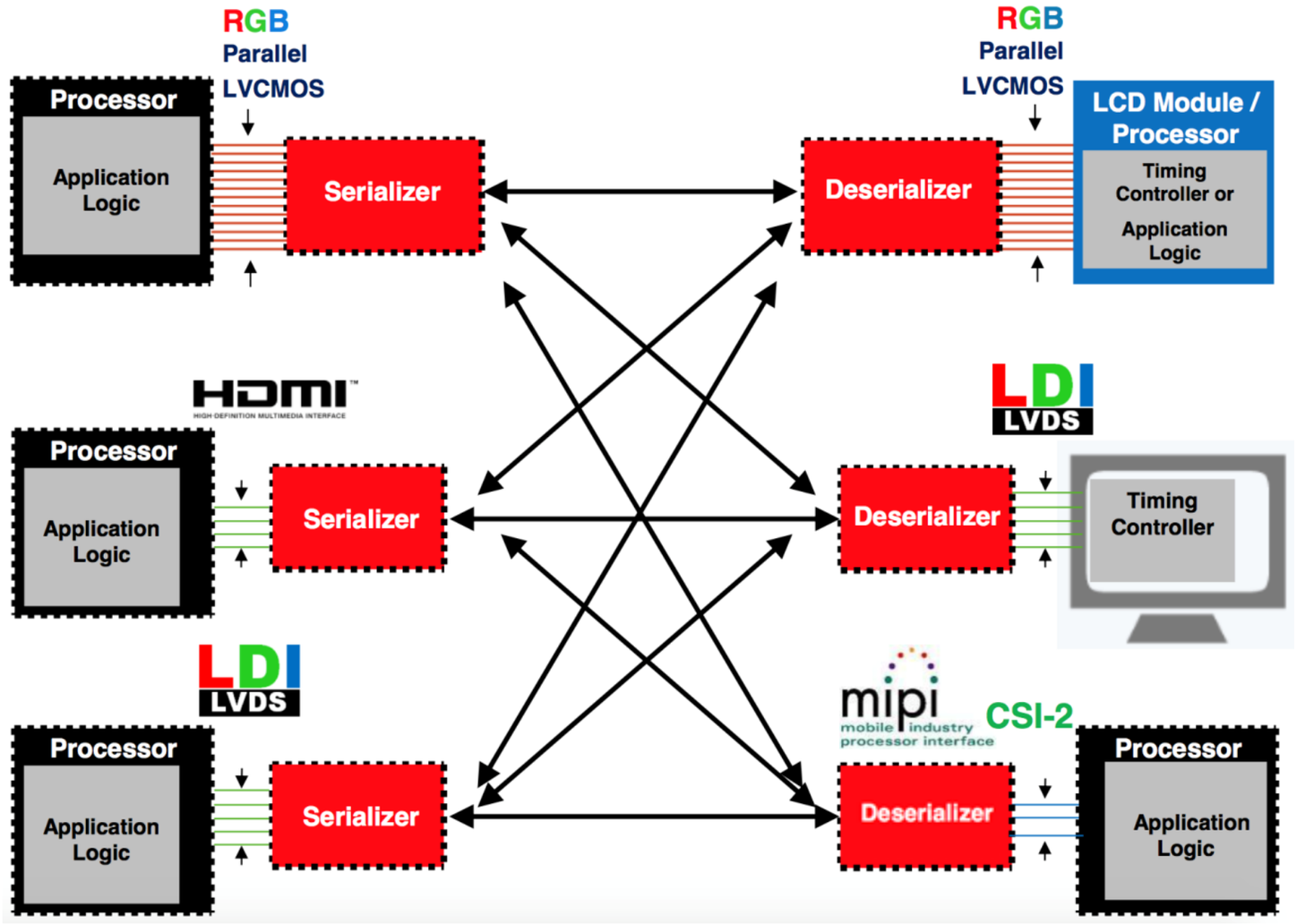

Cable types

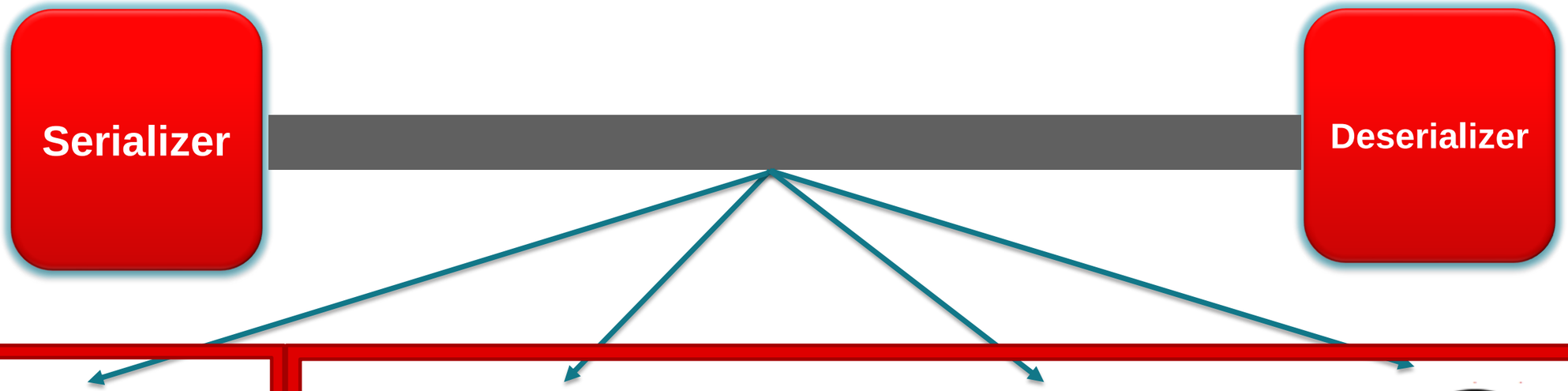

Coaxial cable

- Single-ended signal
- Lower insertion loss
- Lower cost

Shielded-twisted pair (STP)

- One differential pair
- Stronger immunity to EMI

Unshielded-twisted pair (UTP)

- One differential pair
- Lower cost

Star-quad cable (STQ)

- Two differential pairs
- Stronger immunity to EMI

Forward-and-back channels

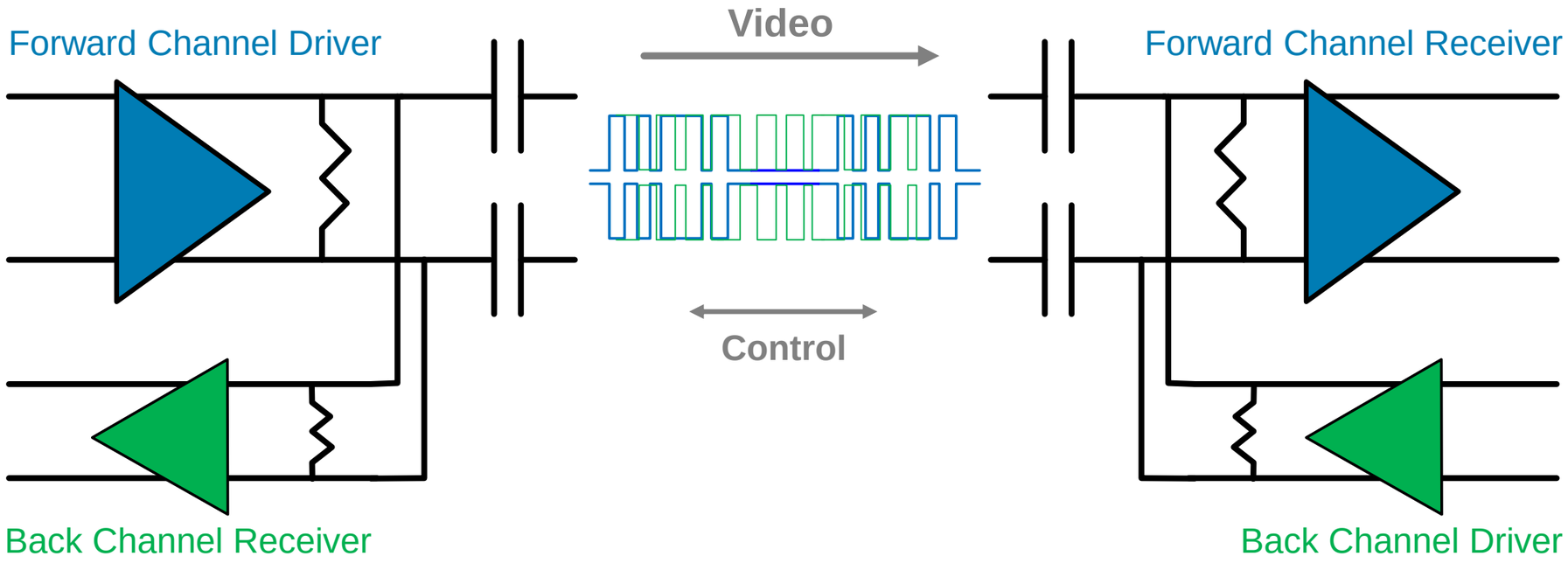

Forward channel:

- Serializer -> deserializer
- High-speed data transmission
- Provide video payload data, I^2C/SPI/GPIO data, and info on link diagnostics to deserializer

Back channel:

- Deserializer -> serializer
- Low-speed data transmission
- Provide CLK for forward-channel line rate
- Provide I^2C, GPIO and SPI info to serializer

Adaptive equalization (AEQ)

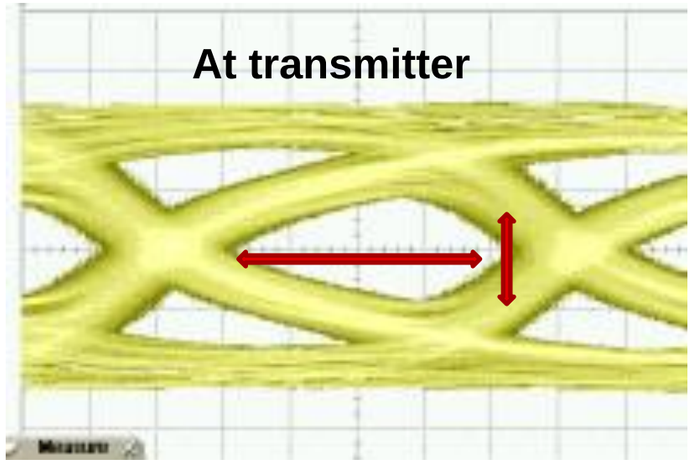

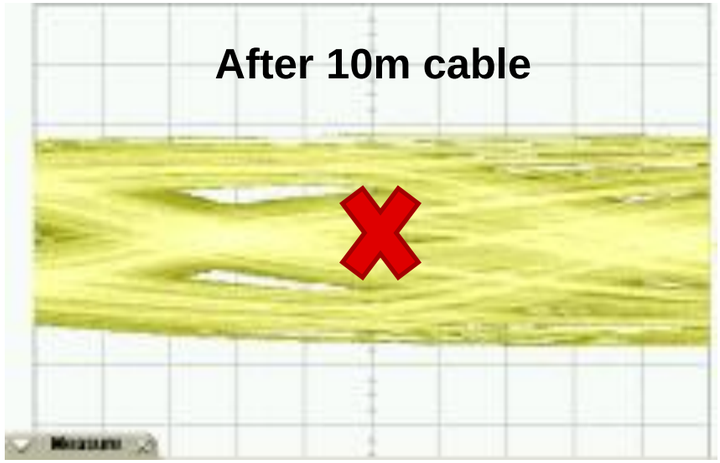

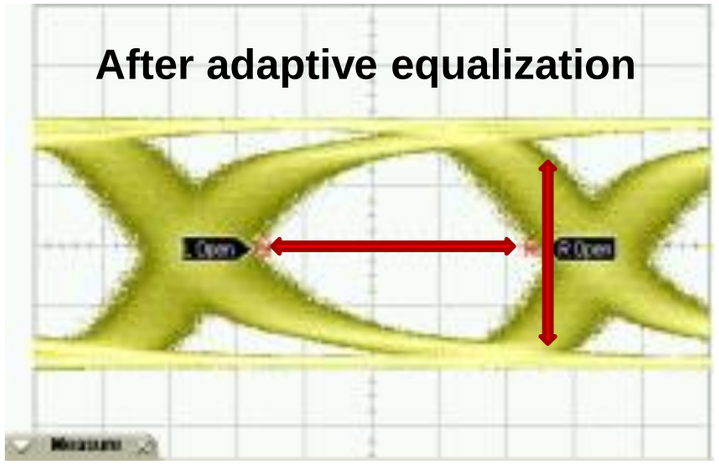

- Compensates cable loss and signal degradation
  - Continuous Time Linear Equalizer (CTLE)
  - Clock domain recovery (CDR)
- Continuously and automatically adapts to cable aging, temperature effects, and changing electromagnetic environments

Forward-channel serialization

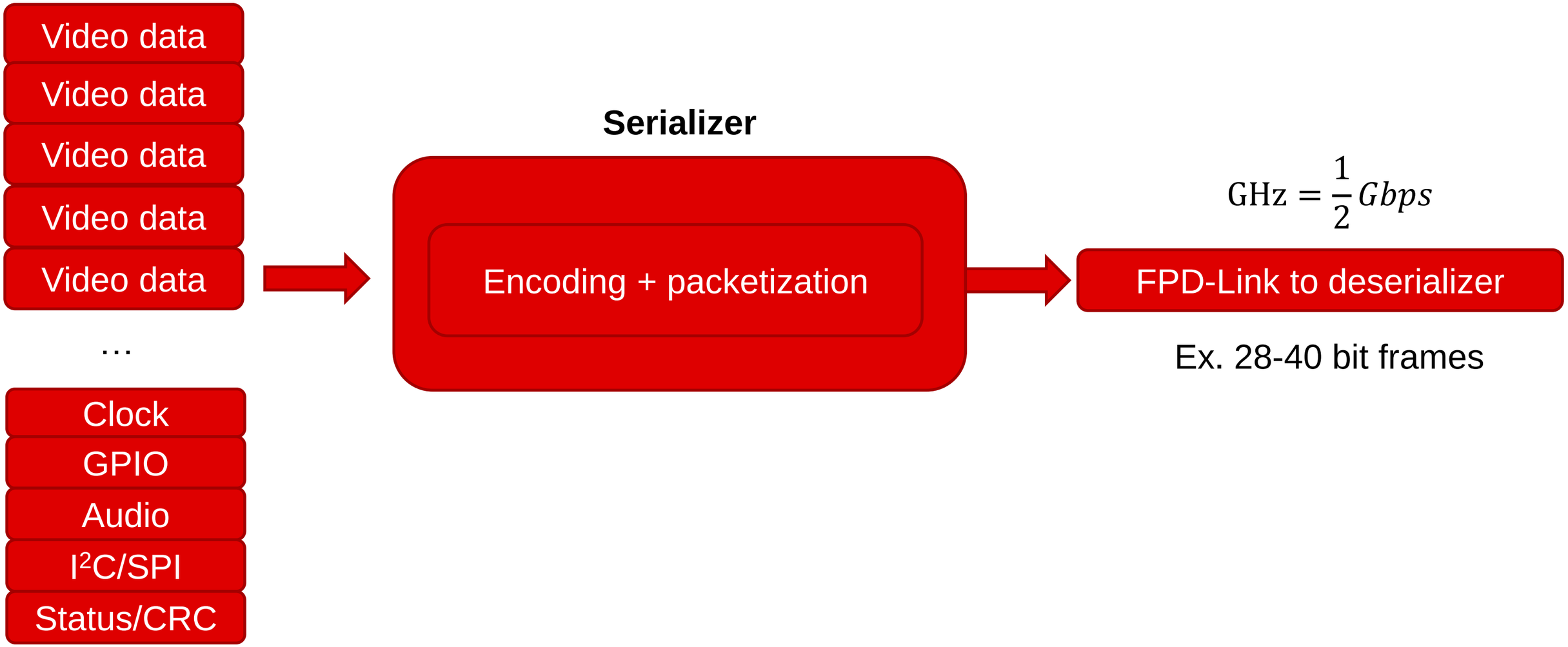

Back-channel communication

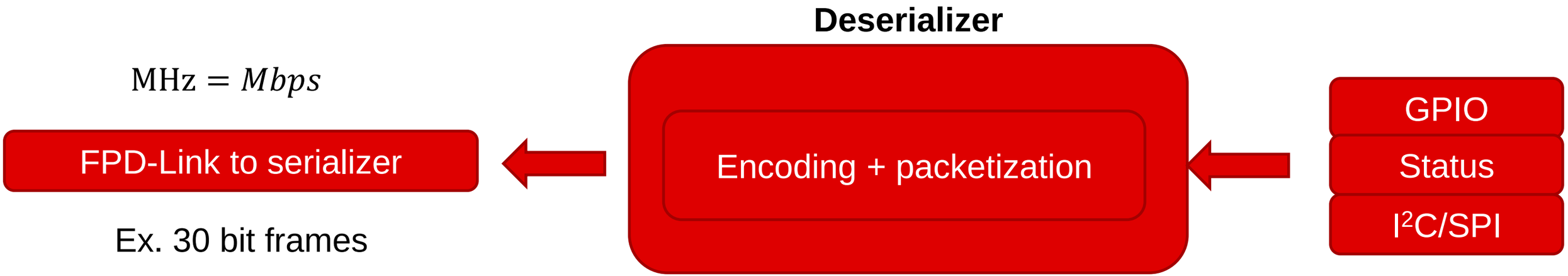

Quiz

1. For an FPD-Link III forward-channel frequency of 3.36Gbps per lane, what is the fundamental carrier frequency for the signal per lane?
   a) 3.36GHz
   b) 96MHz
   ✔ c) 1.68GHz
   d) 6.72GHz
2. For an FPD-Link III back-channel rate of 20Mbps, what is the fundamental carrier frequency for the signal?
   a) 10MHz
   ✔ b) 20MHz
   c) 5MHz
   d) 40MHz
3. True or false?
   – FPD-Link III is a bidirectional half-duplex protocol FALSE

Thank you

- FPD-Link technical resources
- TI FPD-Link products
- ti.com/interface/fpd-link-serdes/products.html

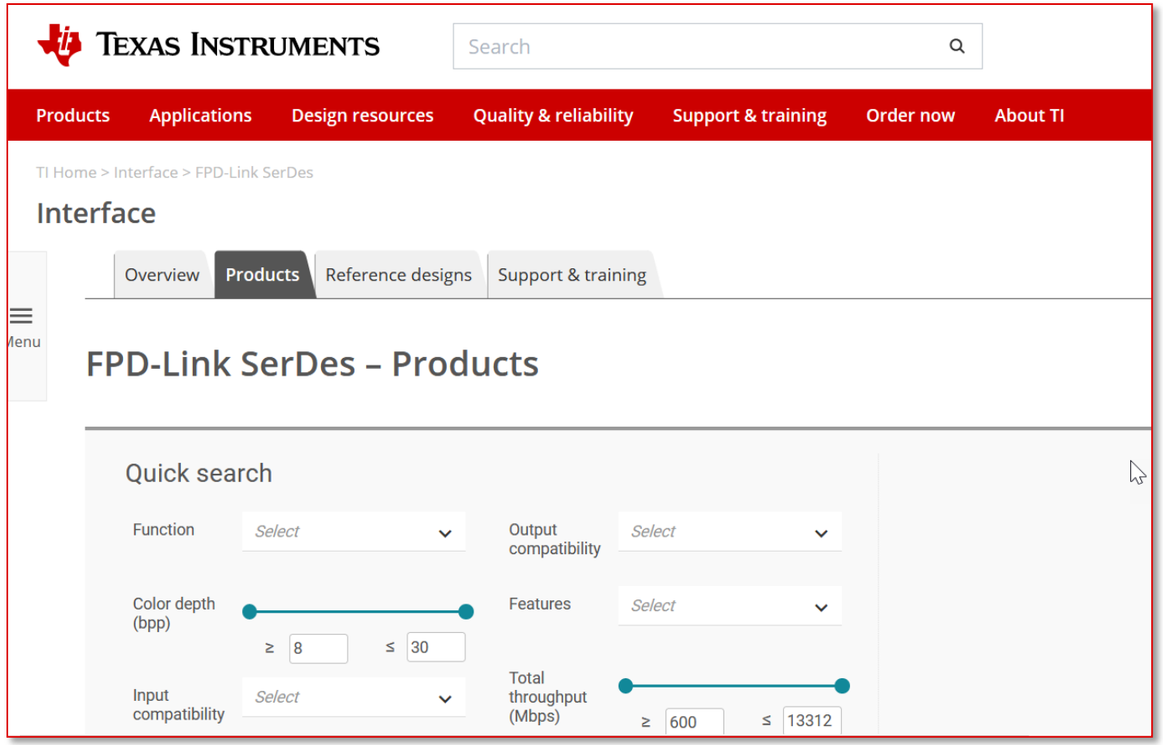

TEXAS INSTRUMENTS

© Copyright 2019 Texas Instruments Incorporated. All rights reserved.

This material is provided strictly “as-is,” for informational purposes only, and without any warranty.
Use of this material is subject to TI’s **Terms of Use**, viewable at TI.com