ITEM NO.	PART NUMBER	DESCRIPTION	QTY.
1	MLC-1-0018	MORGAN TOOLHEAD	1
2	MLC-1-031	3MM FILAMENT INSERT	1
3	MLC-1-030	TIGHTENING CAP	1
4	JHEAD	JHEAD	1
5	JHEAD NOZZLE		1

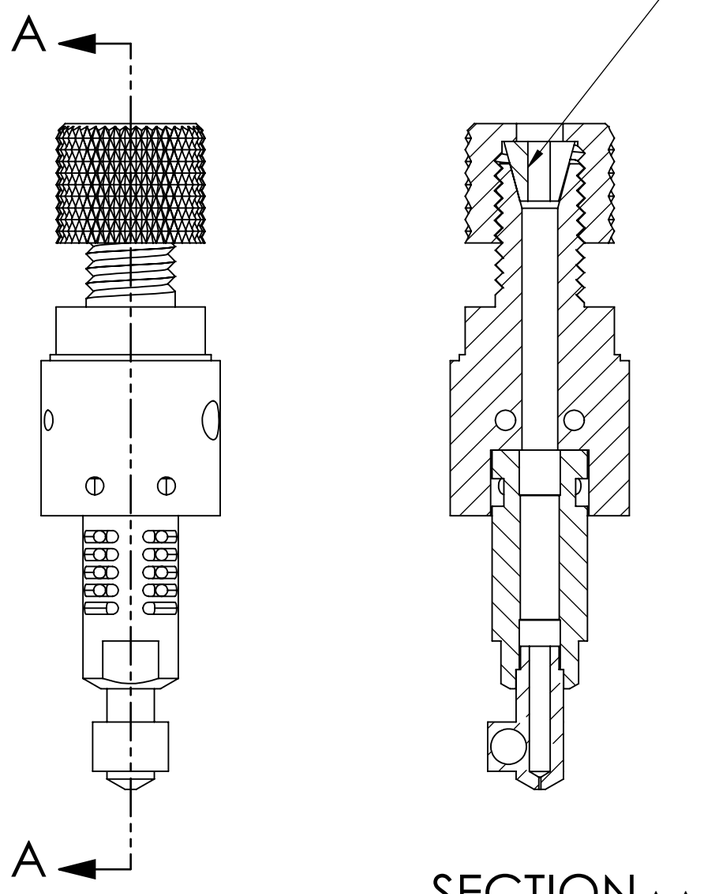

SECTION A-A

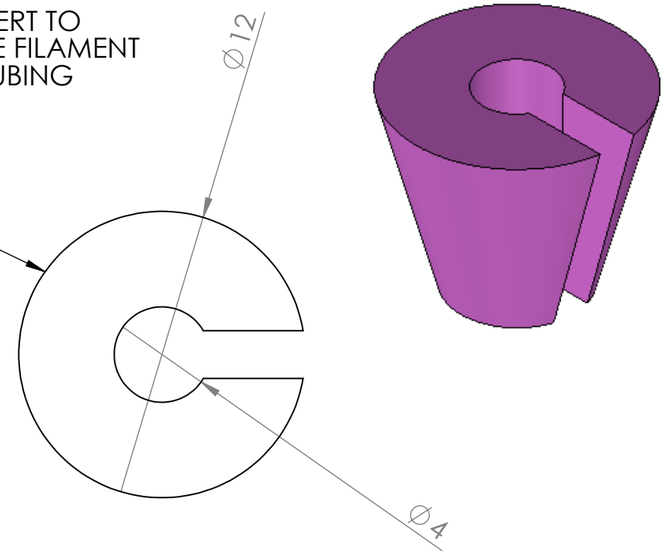

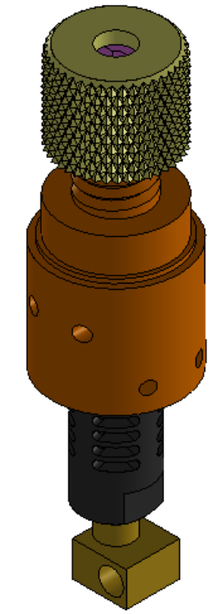

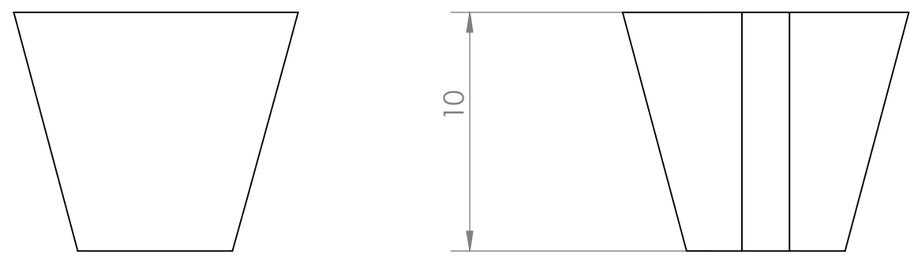

		UNLESS OTHERWISE SPECIFIED:		NAME	DATE
		DIMENSIONS ARE IN INCHES TOLERANCES: FRACTIONAL ± ANGULAR: MACH ± BEND ± TWO PLACE DECIMAL ± THREE PLACE DECIMAL ±	DRAWN		
			CHECKED		
			ENG APPR.		
			MFG APPR.		
		INTERPRET GEOMETRIC TOLERANCING PER:	Q.A.		
		MATERIAL	COMMENTS:		
NEXT ASSY	USED ON	FINISH			
APPLICATION		DO NOT SCALE DRAWING			

MAKELAB CHARLESTON

MAKELAB CHARLESTON

TITLE:

MORGAN HEAD ASSY

SIZE	DWG. NO.	REV
B	MLC-7	

SCALE: 1:1 | WEIGHT: | SHEET 1 OF 1