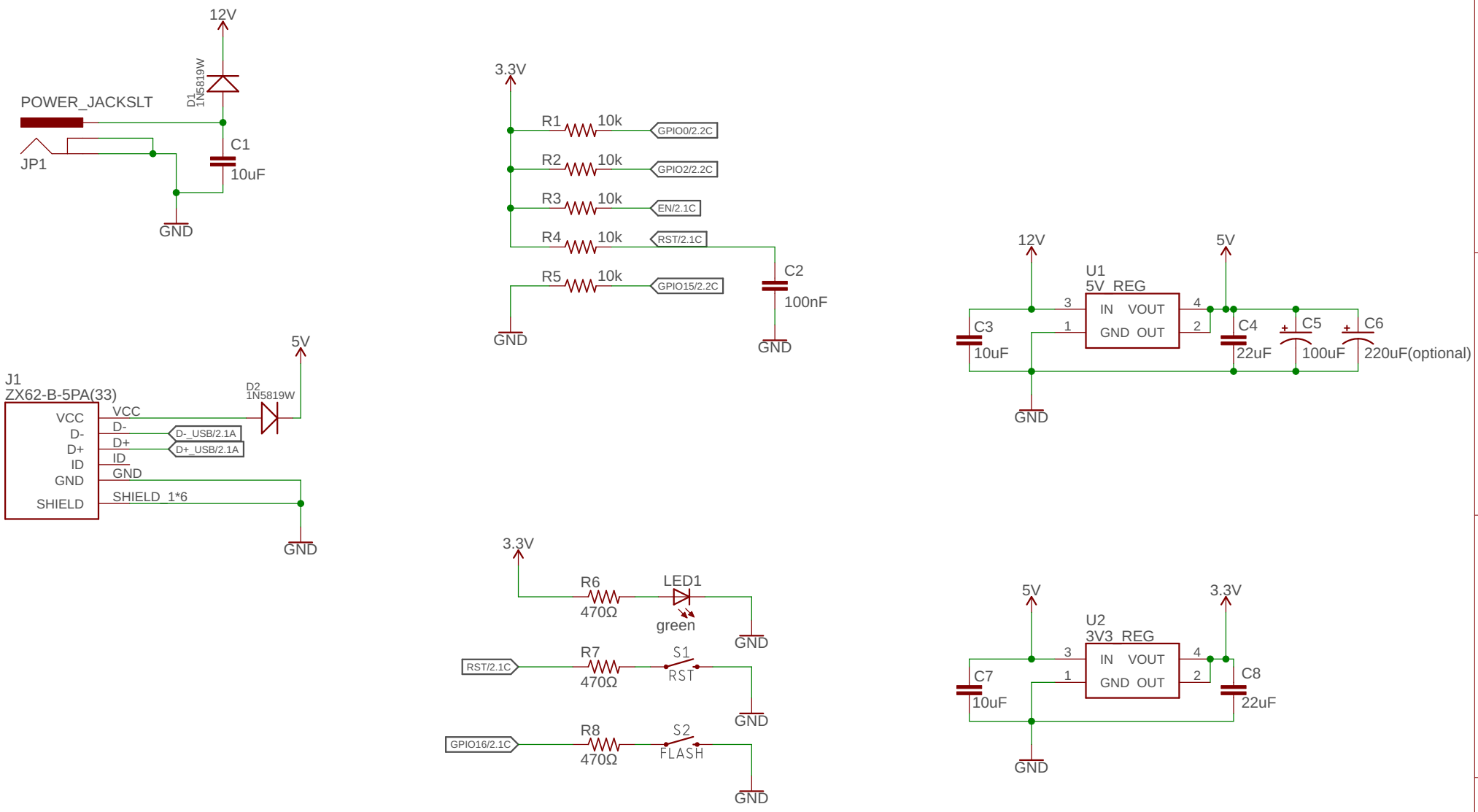

Resistor, LED, capacitor: 0805
100uF: SMC_B(3528) tantalum
220uF: 6.3*7.7mm
Diode: SOD-123
pushbutton: 6mm * 3.5mm

ESP-12E Dev Board

2019-04-29 오후 8:35

Sheet: 1/2

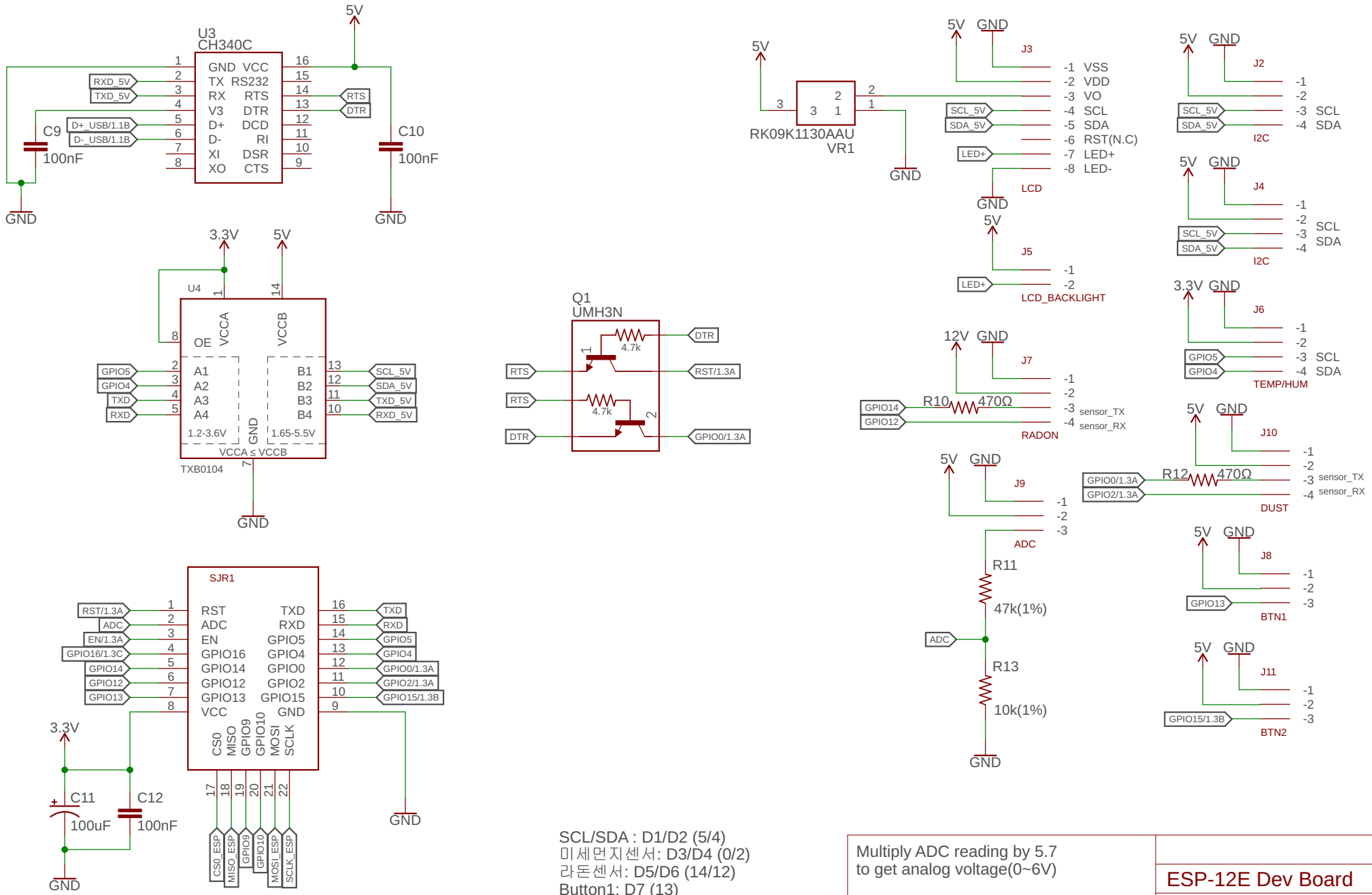

SCL/SDA : D1/D2 (5/4)
미세먼지센서: D3/D4 (0/2)
라돈센서: D5/D6 (14/12)
Button1: D7 (13)
Button2: D8 (15)
Analog: ADC

Multiply ADC reading by 5.7
to get analog voltage(0~6V)

ESP-12E Dev Board

2019-04-29 오후 8:35

Sheet: 2/2