4.3. Problem Description

The system-level model consists of a series of IC chips on a PCB. A fan is used for forced convection cooling of the power dissipating devices. A bonded fin extruded heat sink with eight 0.008 m thick fins is attached to the IC chips. The fan flow rate is defined by a nonlinear fan curve. The system also consists of a perforated thin grille. A study is carried out for the optimum location of the fan by using the parameterization feature in Ansys Icepak.

Figure 4.1: Schematic of the Geometry

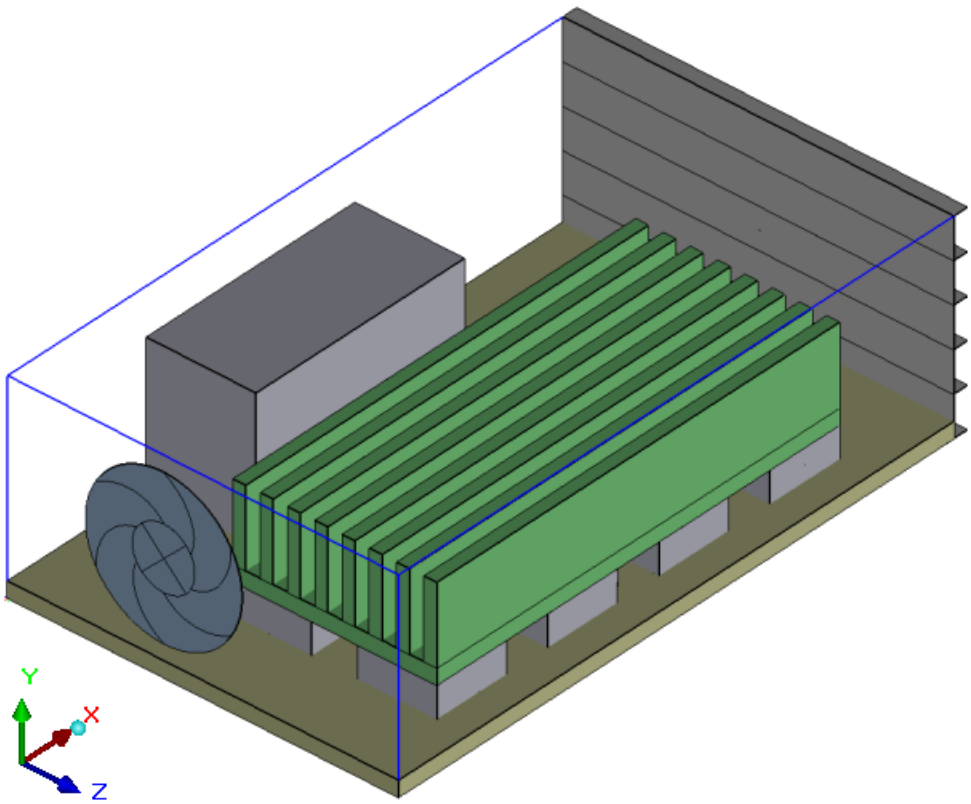

4.4. Step 1: Create a New Project

1. Start Ansys Icepak, as described in Starting Ansys Icepak in the Icepak User's Guide.

   When Ansys Icepak starts, the **Welcome to Icepak** panel opens automatically.

2. Click **New** in the **Welcome to Icepak** panel to start a new Ansys Icepak project.

3. Specify a name for your project (for example, `fan_locations`) and click **Create**.

   Ansys Icepak creates a default cabinet with the dimensions 1 m × 1 m × 1 m, and displays the cabinet in the graphics window. You will modify this cabinet in the next section.

Release 2023 R1 - © ANSYS, Inc. All rights reserved. - Contains proprietary and confidential information of ANSYS, Inc. and its subsidiaries and affiliates.

4.5. Step 2: Build the Model

1. Resize the default cabinet.

   The cabinet forms the boundary of your computational model. Press the isometric view icon ( ) for a 3D view. Select **Cabinet** in the **Model manager** window and enter the location values as shown in the geometry window below. The geometry window can be found in the lower right hand corner of the GUI.

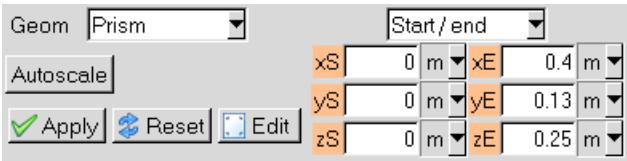

2. Create the Fan.

   Click the **Create fans** icon ( ) in the object toolbar next to the **Model manager** window to create a 2D intake circular fan on one side of the cabinet. Change the plane to **yz** and enter the location values shown in the geometry window below:

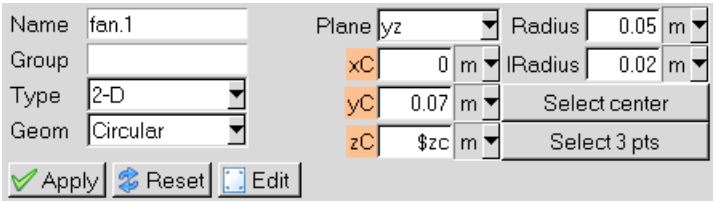

   - Defining a parameter for multiple trials.

     One of the objectives of this exercise is to parameterize the location of the fan. To create a parametric variable in Ansys Icepak, input a $ sign followed by the variable name. Thus, to create the parametric variable "zc", type `$zc` in the **zC** box in addition to the other location values, and click **Apply**. When Ansys Icepak asks you for an initial value of "zc", enter an initial value of `0.1`, and click **Done**.

     Figure 4.2: The Param value Panel

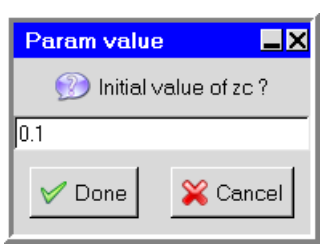

   We will now set the physical properties that will define the fan behavior:

   a. Edit the fan object and go to **Properties** tab.

   b. In the **Properties** tab, retain the selection of **Intake** for **Fan type** and select **Non-linear** in the **Fan flow** tab.

Release 2023 R1 - © ANSYS, Inc. All rights reserved. - Contains proprietary and confidential information of ANSYS, Inc. and its subsidiaries and affiliates.

c. Enter the characteristic curve by clicking on the **Edit** button and selecting **Text Editor** in the drop-down list in the **Non-linear curve** group box.

Figure 4.3: The Fans Panel (Properties Tab)

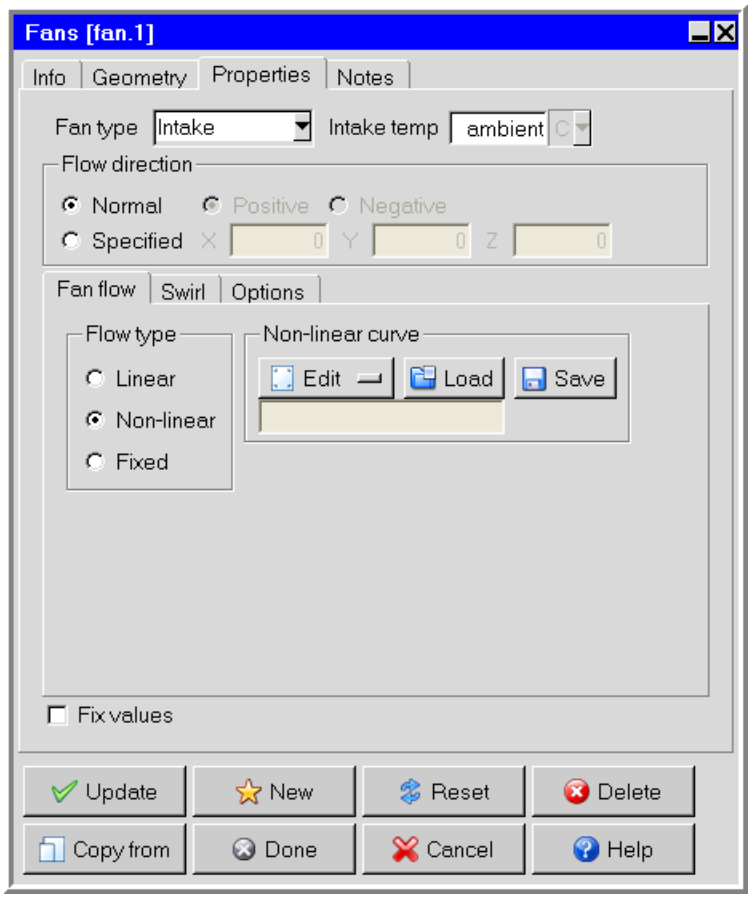

d. First change the units of the volume flow rate and pressure according to the units in Table 4.1: Values for the Curve Specification Panel (p. 106) and enter the values in pairs with a space between them in the **Curve specification** panel.

Table 4.1: Values for the Curve Specification Panel

Volume Flow (CFM)	Pressure (in_water)
0	0.42
20	0.28
40	0.2
60	0.14
80	0.04

Release 2023 R1 - © ANSYS, Inc. All rights reserved. - Contains proprietary and confidential information of ANSYS, Inc. and its subsidiaries and affiliates.

90	0.0

Note:

Pay attention to the two zero values in Table 4.1: Values for the Curve Specification Panel (p. 106). In general, you should start a fan curve specification with a zero flow rate and end the specification with a zero pressure.

e. Click **Accept** to close the form.

f. Select the **Edit** button again in the **Non-linear curve** group box and click **Graph Editor** in the drop-down list to view the fan curve (Figure 4.4: The Fan Curve Panel (p. 107)).

Figure 4.4: The Fan Curve Panel

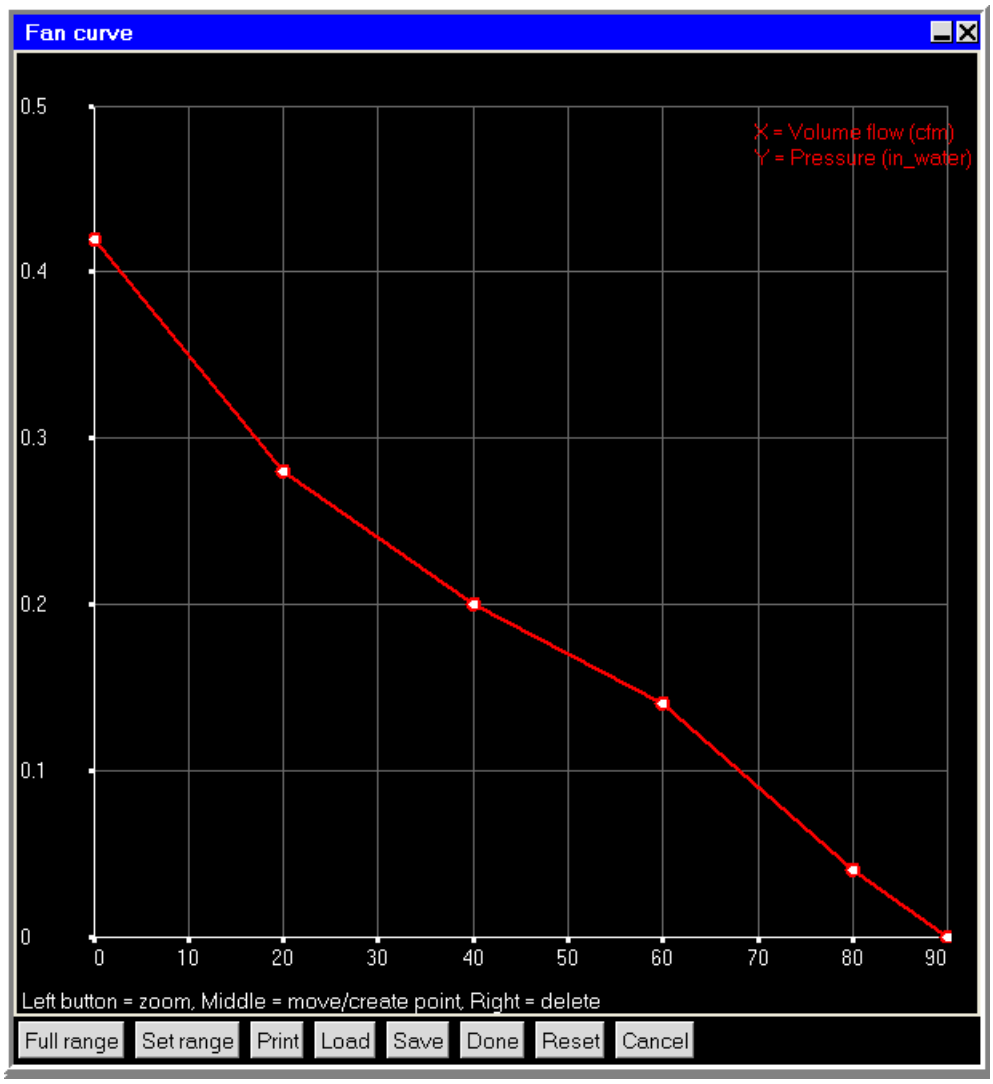

g. Click **Done** to close the **Fan curve** panel.

Release 2023 R1 - © ANSYS, Inc. All rights reserved. - Contains proprietary and confidential information of ANSYS, Inc. and its subsidiaries and affiliates.

h. In the **Properties** tab under the **Swirl** tab, located next to the **Fan flow** tab, set the **RPM** of the fan to `4000`.

i. In the **Properties** tab, set the **Operating RPM** of `2000` in the **Options** tab, located next to the **Swirl** tab.

Note:

The **RPM** under the **Swirl** tab specifies the nominal RPM of the fan from the existing fan curve. The **Operating RPM** in the **Options** tab is a working RPM value used in conjunction with the nominal RPM to dynamically scale and update the fan curve according to the fan laws. The nominal RPM can also be used to compute the swirl factor. Refer to Chapter 21: Fans in the User's Guide for more information regarding fan objects.

---

j. Click **Update** and **Done** to close the fan window.

Now the model looks as shown in Figure 4.5: Model with Fan (p. 108).

Figure 4.5: Model with Fan

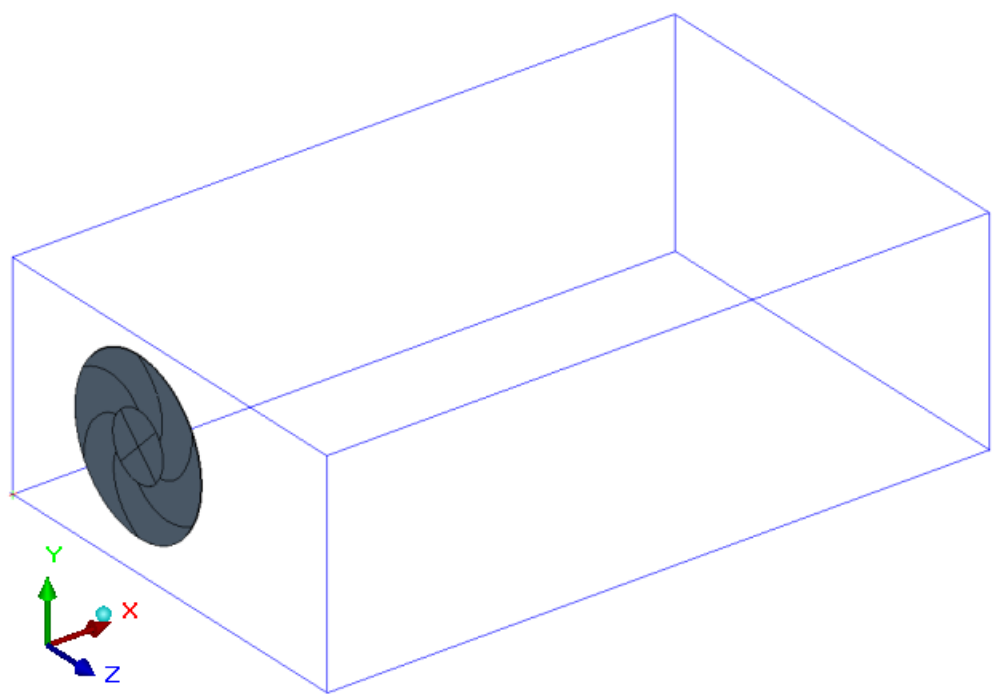

Note:

The shading of the fan object can be changed by changing the **Shading** option under the **Info** tab to change the shading of just that object, or by leaving it as **default** and changing the default shading option by going to **View** → **Default shading** to change the shading of all objects that have **default** shading selected.

Release 2023 R1 - © ANSYS, Inc. All rights reserved. - Contains proprietary and confidential information of ANSYS, Inc. and its subsidiaries and affiliates.

3. Set up a grille.

   a. Click the **Create grille** icon ( ) for creating a new grille, set its plane to **Y-Z**. Then, using the **Morph faces** ( ) option move the grille to the max-X face of the cabinet. After clicking the icon ( ), the graphics display window presents step by step instructions on how to use the **Morph faces** option. Alternatively, you can use the coordinates shown in the geometry window below:

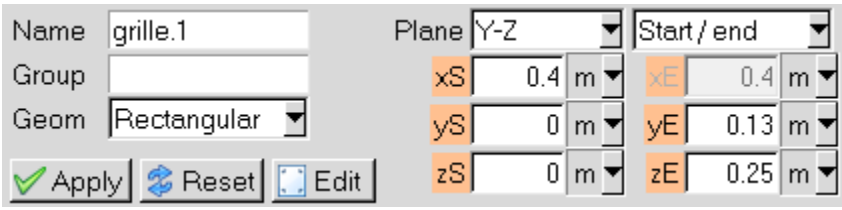

   b. Now define properties for the grille by clicking the **Properties** tab.

> **Note:**
>
> This is a 50% open perforated thin grille.

      i. For the **Velocity loss coefficient**, keep the default selection of **Automatic**.

      ii. Specify a **Free area ratio** of `0.5`.

> **Note:**
>
> The free area ratio is the ratio of the area through which the fluid can flow unobstructed to the total planar area of the obstruction. Ansys Icepak calculates the loss coefficient of the grille based on the free area ratio. Different resistance types govern the method of calculation. See Pressure Drop Calculations for Grilles in the User's Guide for more information on the free area ratio and the various pressure drop calculation methods.

      iii. Retain **Perforated thin vent** for the **Resistance type**. Refer to Figure 4.6: Grille Panel (Properties Tab) (p. 110) for the correct settings.

Release 2023 R1 - © ANSYS, Inc. All rights reserved. - Contains proprietary and confidential information of ANSYS, Inc. and its subsidiaries and affiliates.

Figure 4.6: Grille Panel (Properties Tab)

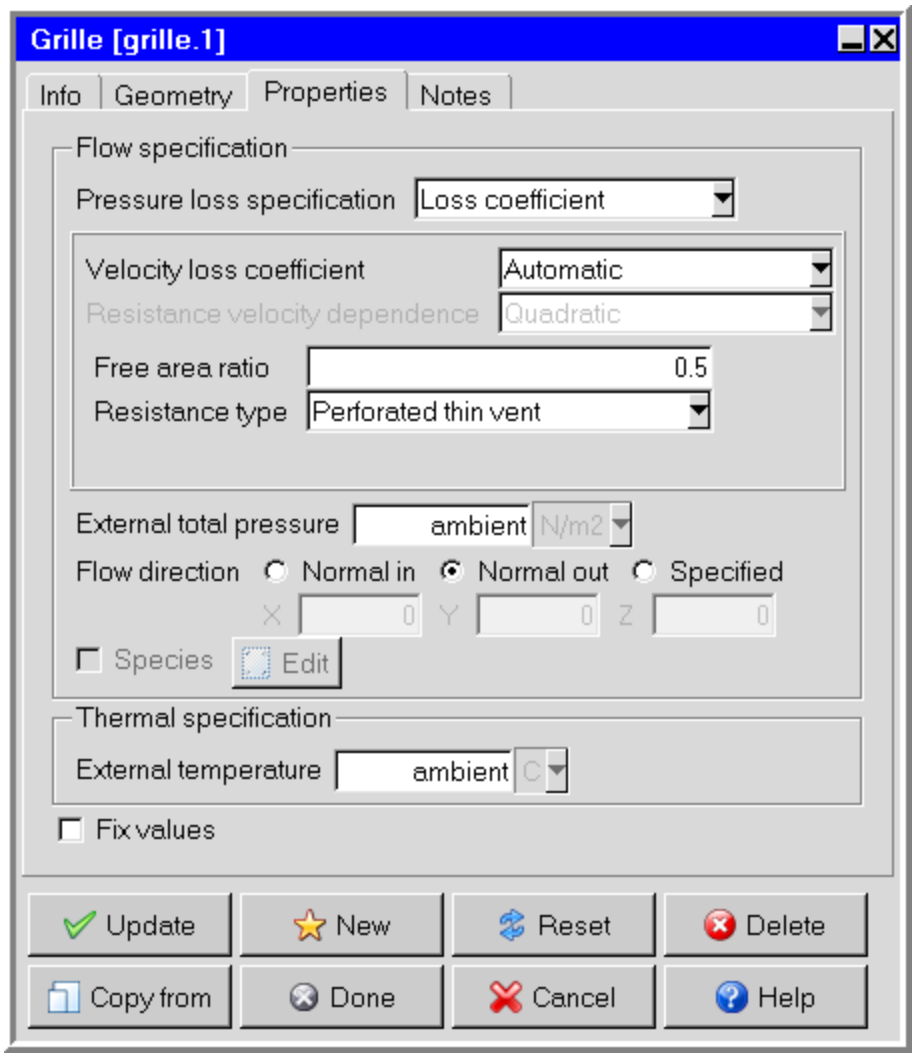

iv. Click **Update** and then **Done** to close the panel.

For more details on loss coefficient data, refer to *Handbook of Hydraulic Resistance*, by I. E. Idel'chik.

The model looks as shown in Figure 4.7: Model with Fan and Grille (p. 111).

Release 2023 R1 - © ANSYS, Inc. All rights reserved. - Contains proprietary and confidential information of ANSYS, Inc. and its subsidiaries and affiliates.

Figure 4.7: Model with Fan and Grille

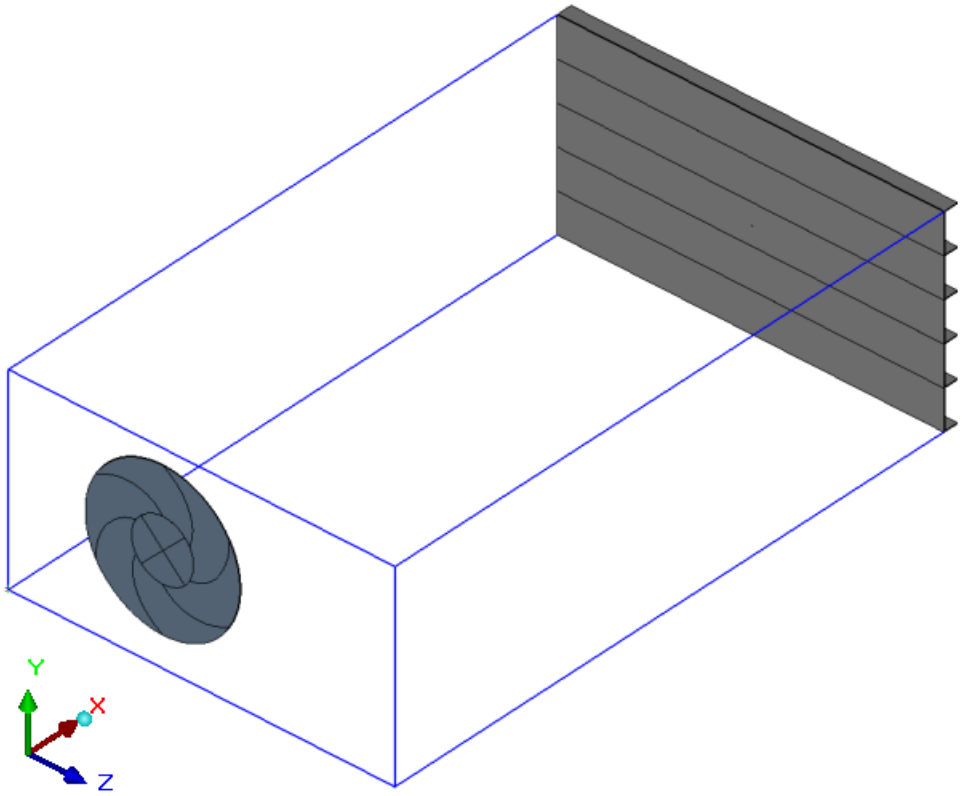

4. Set up a wall.

Note:

The model includes a `0.01` m thick PCB that touches and covers the entire min-Y floor of the cabinet. The PCB is exposed to the outside with a known heat flux of 20 W/m^2. In order to consider the heat flux, we will use a wall object to simulate the PCB.

---

a. Click the **Create walls** icon ( ) to create a new wall. We will define the geometry and physical parameters for the wall object:

   i. Make the plane **X-Z**.

   ii. Use the **Morph faces** icon ( ) from the model toolbar to align the wall object with the entire min-Y floor of the cabinet.

   Note:

   If you have difficulty selecting faces, try clicking near the edge of a face. Clicking correctly should highlight the entire face in red.

   ---

   iii. Edit the **Wall** object and go to **Properties** tab.

Release 2023 R1 - © ANSYS, Inc. All rights reserved. - Contains proprietary and confidential information of ANSYS, Inc. and its subsidiaries and affiliates.

iv. In the **Material** group box, set the **Wall thickness** to `0.01` m and the **Solid material** to **FR-4**.

v. In the **Thermal specification** group box, specify a **Heat flux** of **`20`** W/m2. See Figure 4.8: Walls Panel (Properties Tab) (p. 112) for the correct settings.

Figure 4.8: Walls Panel (Properties Tab)

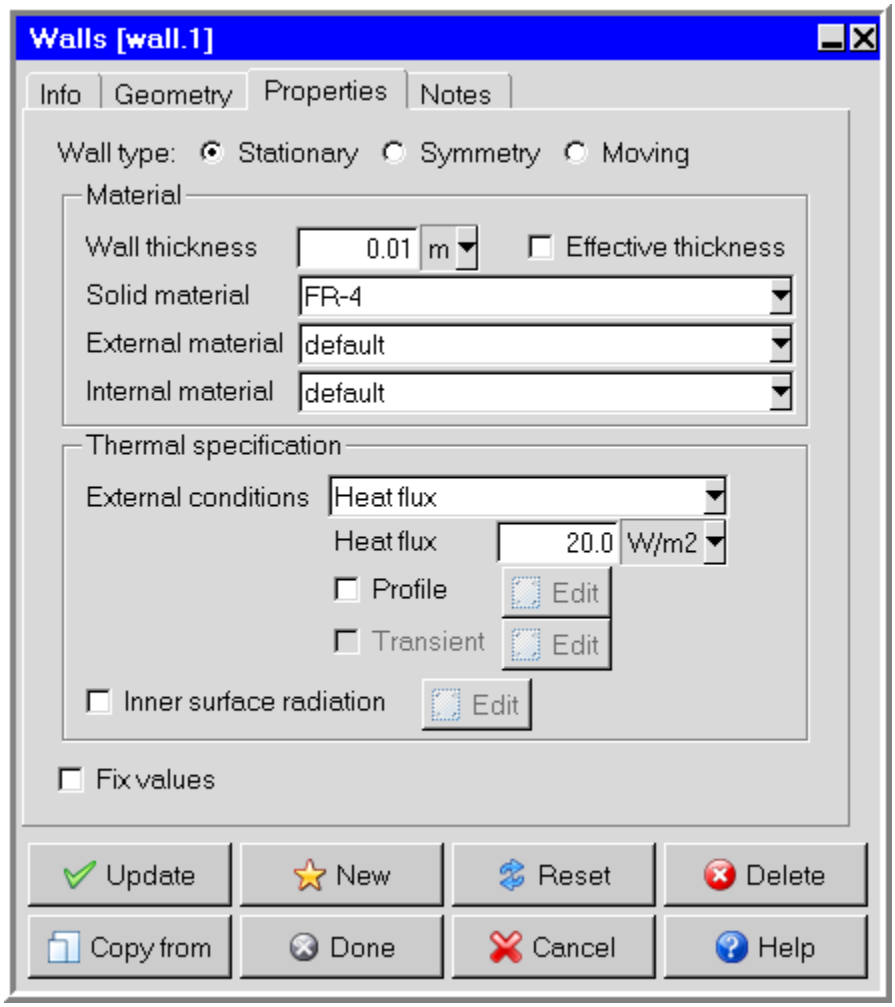

vi. Click **Update** and then **Done** to close the panel.

After creating the wall, the model looks as shown in Figure 4.9: Model with Wall Added (p. 113).

Release 2023 R1 - © ANSYS, Inc. All rights reserved. - Contains proprietary and confidential information of ANSYS, Inc. and its subsidiaries and affiliates.

Figure 4.9: Model with Wall Added

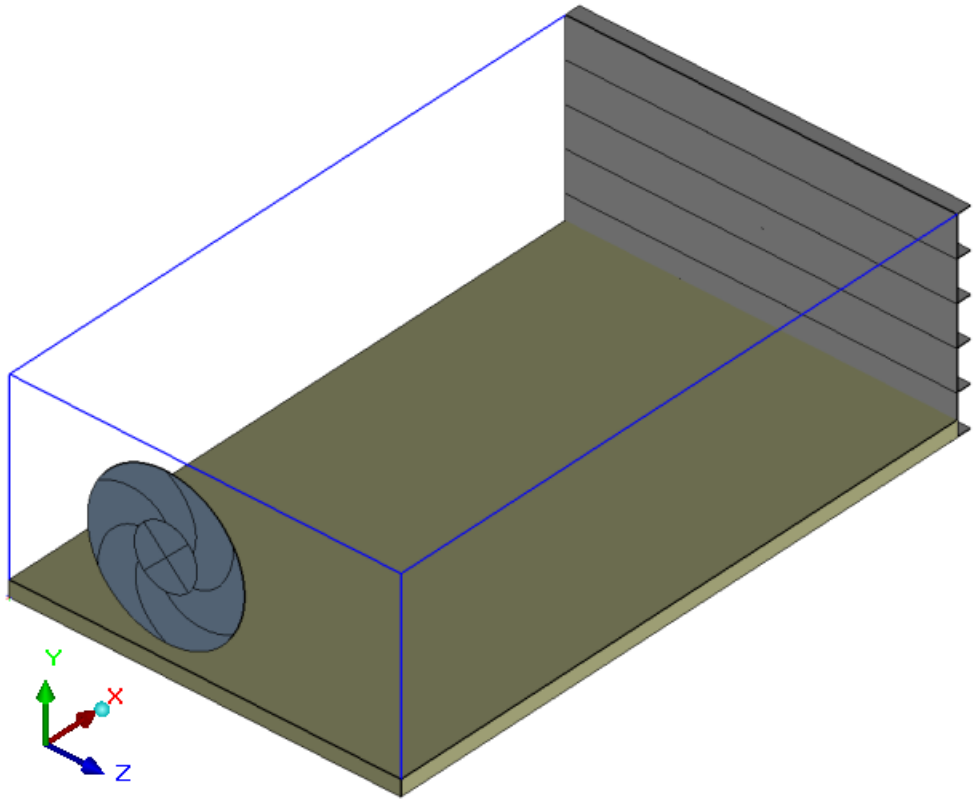

5. Create blocks.

   In this step, you will create several types of blocks to represent different physics.

   - Creation of Solid Blocks

     Now, create four blocks that dissipate **5** W each and have a contact resistance of `0.005` C/W on their bottom faces.

     a. Create a new block ( ) , and retain the **Type** as **solid** and **Geom** as **Prism**. Enter the location values shown in the panel below:

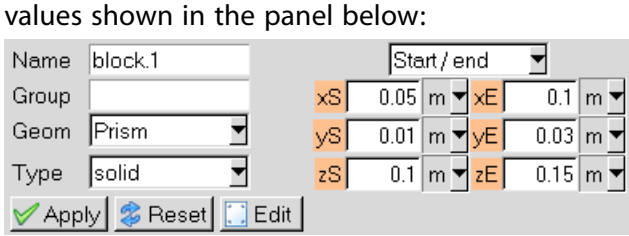

     b. Edit the block and specify the following in the **Properties** tab:

        i. In the **Surface specification** group box, click the **Individual sides** check box and click **Edit** (Figure 4.10: The Individual side specification (p. 114)).

           A. Select **Min Y** and toggle **Thermal properties** and **Resistance**.

Release 2023 R1 - © ANSYS, Inc. All rights reserved. - Contains proprietary and confidential information of ANSYS, Inc. and its subsidiaries and affiliates.

B. Under **Thermal condition**, retain the selection of **Fixed heat** and **Total power** of `0` W.

C. Select **Thermal resistance** from the drop-down menu next to **Resistance**.

D. Set **Thermal resistance** to **`0.005`** C/W.

E. Click **Accept** to close the panel.

Figure 4.10: The Individual side specification

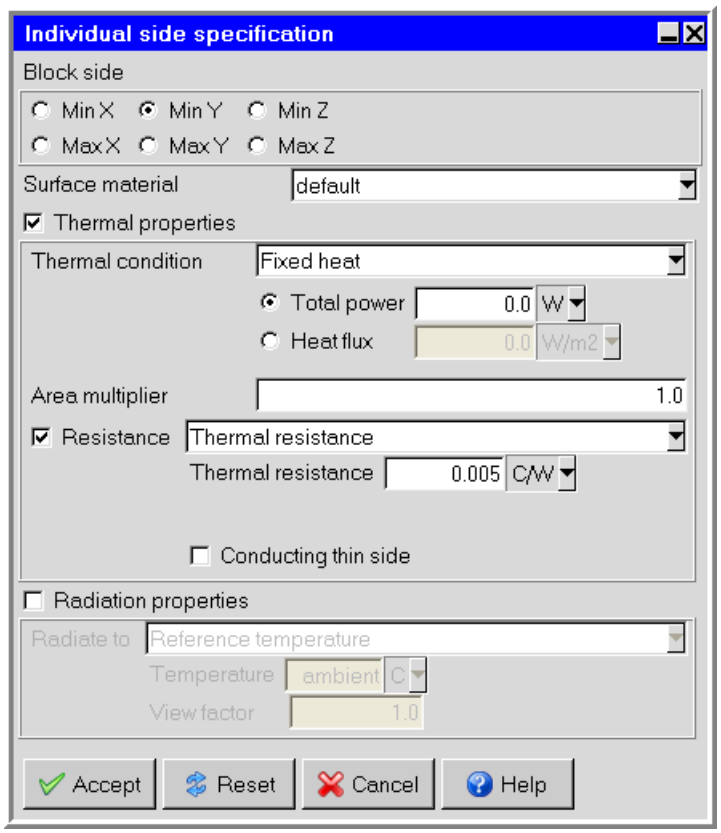

ii. In the **Thermal specification** group box in the **Properties** tab, retain the selection of **default** for **Solid Material** (you can also select **Al-Extruded** which is the default).

iii. Set **Total Power** to 5 W.

iv. Click **Update** and **Done** to close the panel.

c. Next, make three copies of this block with an **X offset** of `0.08` m.

Note:

The previous tutorial showed you how to make a copy of an object.

Release 2023 R1 - © ANSYS, Inc. All rights reserved. - Contains proprietary and confidential information of ANSYS, Inc. and its subsidiaries and affiliates.

Figure 4.11: Creation of Solid Blocks

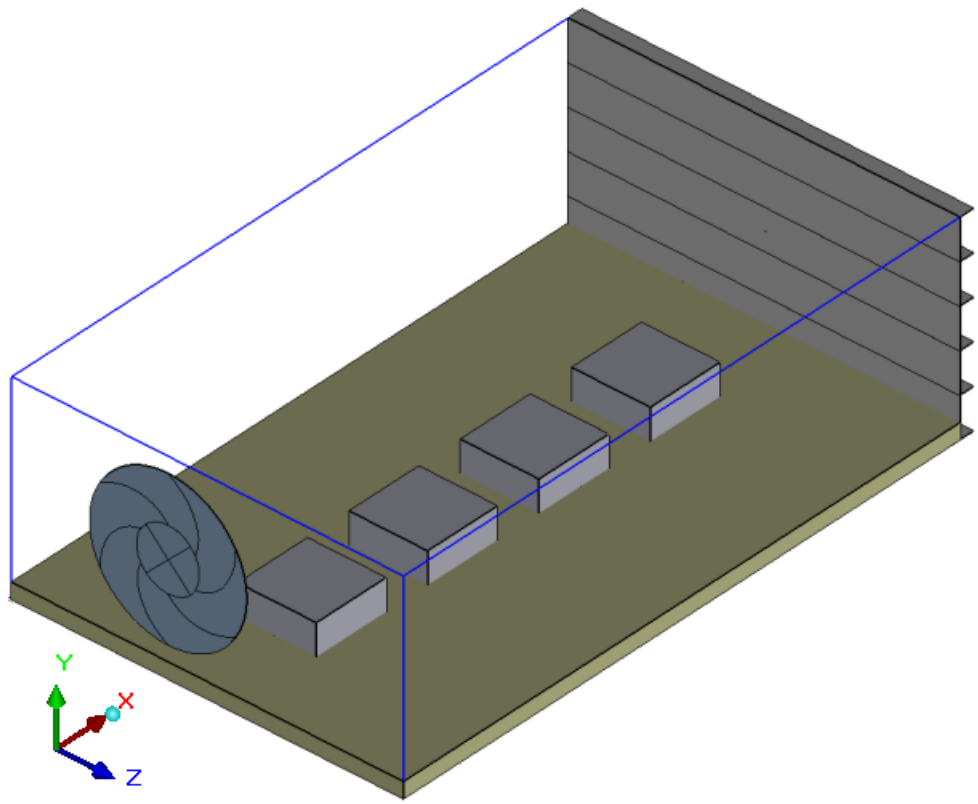

- Creation of Network blocks

  Create four IC chips in the form of network blocks. To create a network block, create a **Block** object and change the block type to **Network** in the **Properties** tab. Each network block has junction-to-board, junction-to-case, and junction-to-sides thermal resistances. The values of these resistances are known beforehand.

  a. Add a new block, and position it as shown in the panel below:

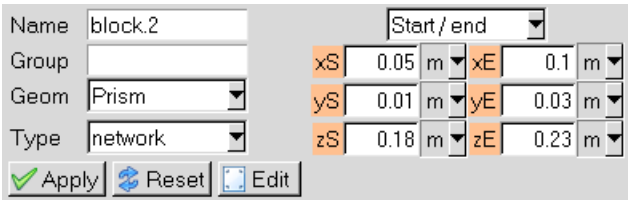

  b. Edit the block to change the properties of this block:

     – Ensure that the **Block type** is set to **Network**.

     – Toggle **Star Network**.

       → Enter the **Network parameters** as shown in Figure 4.12: The Properties Panel (p. 116).

Release 2023 R1 - © ANSYS, Inc. All rights reserved. - Contains proprietary and confidential information of ANSYS, Inc. and its subsidiaries and affiliates.

Figure 4.12: The Properties Panel

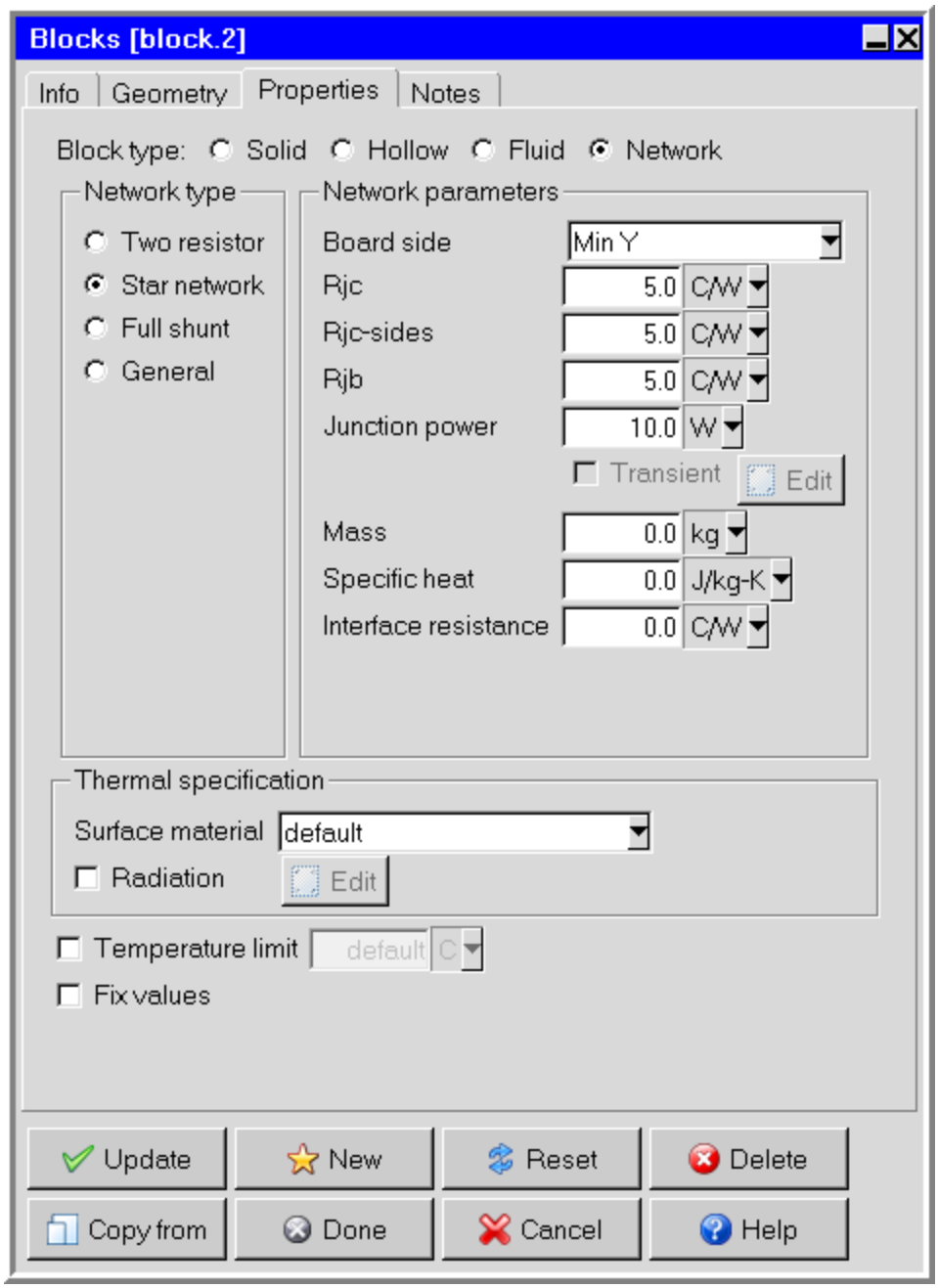

c. Now make three copies of this network block with an **X offset** of `0.08` m. This finishes the creation of the network blocks.

- Creation of a Hollow Block

Note:

Finally, to cut out a section of the cabinet from the computational domain, create a hollow block. This represents a region that does not directly affect heat transfer via solid conduction but that does, however, alter the flow patterns surrounding this region.

Release 2023 R1 - © ANSYS, Inc. All rights reserved. - Contains proprietary and confidential information of ANSYS, Inc. and its subsidiaries and affiliates.

a. Create a new **Block**. Set the **Block type** as **Hollow**.

b. In the **Geometry** tab, go to the **Local coord system** drop-down menu.

c. Select **Create new** to open the **Local coords** panel.

d. Enter **X offset** = 0.1, **Y offset** = 0, **Z offset** = 0.

e. Click **Accept**. This is just to demonstrate the use of local coordinate system.

f. Further, size the block as follows:

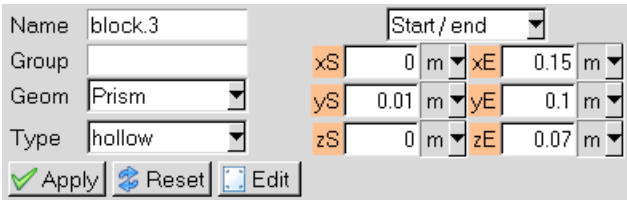

6. Now we will create the detailed heat sink. The heat sink base acts as a heat spreader for all the chips.

a. Click the **Create heat sinks** icon ( ) and edit it. In the **Properties** tab, select **Detailed** in the **Type** drop-down menu. Entering its location and properties as shown in the following table:

Table 4.2: Heatsink Properties

Geometry	
Plane:	X-Z
xS / **xE**:	0.05/0.34
yS / **yE**:	0.03/—
zS / **zE**:	0.1/0.23
Base height:	0.01 m
Overall height:	0.06 m
Properties	
Type:	Detailed
Flow Direction:	X
Detailed Fin type:	Bonded fin
Fin setup	
Fin spec:	Count/thickness
Count:	8
Thickness:	0.008 m
Flow/thermal data	
Fin material:	default
Base material:	Cu-Pure

Release 2023 R1 - © ANSYS, Inc. All rights reserved. - Contains proprietary and confidential information of ANSYS, Inc. and its subsidiaries and affiliates.

Interface	
Fin bonding:	Click the **Edit** button
Effective thickness:	0.0002 m
Solid material:	default

b. Click **Update** and **Done**. This completes the model building process. The complete model should look like that shown in Figure 4.13: Final Model (p. 118).

Figure 4.13: Final Model

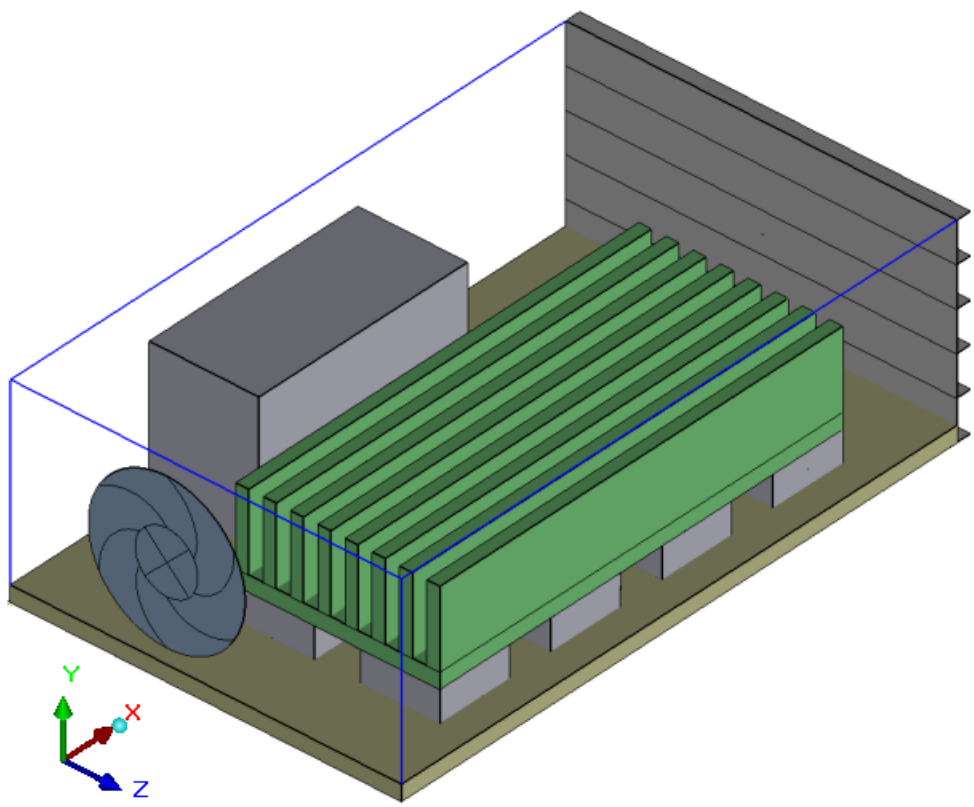

7. Check the definition of the modeling objects to ensure that you have specified them properly.

   View → **Summary (HTML)**

   The summary report now appears in a web browser. The summary displays a list of all the objects in the model and all the parameters that have been set for each object. You can view the detailed version of the summary by clicking the appropriate object names or property specifications. If you

Release 2023 R1 - © ANSYS, Inc. All rights reserved. - Contains proprietary and confidential information of ANSYS, Inc. and its subsidiaries and affiliates.

notice any incorrect specifications, you can return to the appropriate modeling object panel and change the settings in the same way that you originally entered them.

Note:

The summary report also shows the user-specified material properties for each of the objects to help identify the proper material specifications. Figure 4.14: Partial Table of Summary Report for Blocks (p. 119) shows the summary report for **block.1**, which includes its material specifications.

Figure 4.14: Partial Table of Summary Report for Blocks

Object			Thermal	Material		Sides	No. of Sides	Power		Additional details
Name	Shape	Block type	Type	Surface	Solid	Enabled	Num Sides Added	Total	Type	
block.1	Prism	Solid		Steel-Oxidised-surface	Al-Extruded	YES	2	5.0 W	constant	
block.1.1	Prism	Solid		Steel-Oxidised-surface	Al-Extruded	YES	2	5.0 W	constant	
block.1.2	Prism	Solid		Steel-Oxidised-surface	Al-Extruded	YES	2	5.0 W	constant	
block.1.3	Prism	Solid		Steel-Oxidised-surface	Al-Extruded	YES	2	5.0 W	constant	
block.2	Prism	Network					2			Resistance type = Star network
block.2.1.1	Prism	Network					2			Resistance type = Star network
block.2.2	Prism	Network					2			Resistance type = Star network
block.2.3	Prism	Network					2			Resistance type = Star network
block.3	Prism	Hollow	Fixed heat	Steel-Oxidised-surface		NO	2			

4.6. Step 3: Creating Separately Meshed Assemblies

One of the key aspects of modeling is to use a mesh with good quality and sufficient resolution for the model. We need to have a fine mesh in the areas where temperature gradients are high or flow is turning. Having too coarse of a mesh will not give you accurate results and having too fine a mesh may lead to longer run times. The best option is to explore the model carefully and look for opportunities to reduce mesh counts in the areas where the gradients are not steep. Creating non-conformal assemblies gives required accuracy along with reduced mesh count. Select a set of objects to create assemblies. Also decide suitable slack values for assembly bounding box. Your selection can be reviewed in the section below where we will create non-conformal meshed assemblies.

We will now create two non-conformal meshed assemblies.

1. To create the first assembly, first highlight all the blocks (except the hollow block) and the heat sink object in the **Model manager** window, then right-click them and choose **Create** and then **Assembly**.

2. Right-click and select **Rename** from the menu. Rename the assembly, as **Heatsink-packages-asy**.

3. To build the "bounding box" for the assembly called **Heatsink-packages-asy**, double-click it to edit the assembly.

4. In the **Meshing** tab of the **Assemblies** panel, toggle **Mesh separately**, and then set the **Slack** parameters as the following:

Table 4.3: Slack Values for Heatsink-packages-asy Assembly

Min X	`0.005` m	**Max X**	`0.015` m

Release 2023 R1 - © ANSYS, Inc. All rights reserved. - Contains proprietary and confidential information of ANSYS, Inc. and its subsidiaries and affiliates.

Min Y	**0.005** m	**Max Y**	**0.005** m
Min Z	**0.005** m	**Max Z**	**0.005** m

Note:

- Note that for the Heatsink-packages-asy, we have set a bounding box that is 0.005 m bigger than the assembly at five sides except **Max X** where the slack is defined higher (0.015 m) to capture the wake region of the flow.

5. Click **Update** and **Done** to complete the bounding box specifications for the assembly.

   Following the same procedure above, create one more assembly for the fan object (name it **Fan-asy**). Use the following table to assign the **Slack** values for the **Fan-asy** assembly.

   Table 4.4: Slack Values for Fan-asy Assembly

Min X	**0** m	**Max X**	**0.005** m
Min Y	**0.002** m	**Max Y**	**0.002** m
Min Z	**0.002** m	**Max Z**	**0.002** m

4.7. Step 4: Generate a Mesh

To generate the mesh:

1. Open the **Mesh control** panel, keep the default values for the mesh settings and ensure that **Mesh assemblies separately** is selected.

2. Click **Generate**. You may get a warning about minimum separation if the **Allow minimum gap changes** option is deselected in the **Misc** tab.

   Note:

   This warning appears because the **Minimum gap** (separation), which is like a tolerance setting for the mesher, is larger than 10% of the smallest feature in the model. When there are objects smaller than the mesher tolerance, those objects will not be meshed correctly. To avoid this, you need to change the value to modify the minimum gap to 10% of the smallest object. The prompt window that appears allows you to do this with the **Change value and mesh** option. This option is used for this particular tutorial and may not be applicable all the time. As the mesh separation setting is a useful tool designed to avoid unnecessary meshing due to inadvertent misalignments in the model (without modifying the geometry), we may use other options suitable to the model.

3. Click **Change value and mesh**.

4. Examine the mesh by taking plane cuts in all directions under the **Display** tab.

Release 2023 R1 - © ANSYS, Inc. All rights reserved. - Contains proprietary and confidential information of ANSYS, Inc. and its subsidiaries and affiliates.

5. Go to the **Mesh control** panel, click the **Quality** tab and examine **Face alignment** (Figure 4.15: Graph of Face alignment (p. 121)). Due to differences among different machines, your numbers may not be exactly the same as those of Figure 4.15: Graph of Face alignment (p. 121).

Figure 4.15: Graph of Face alignment

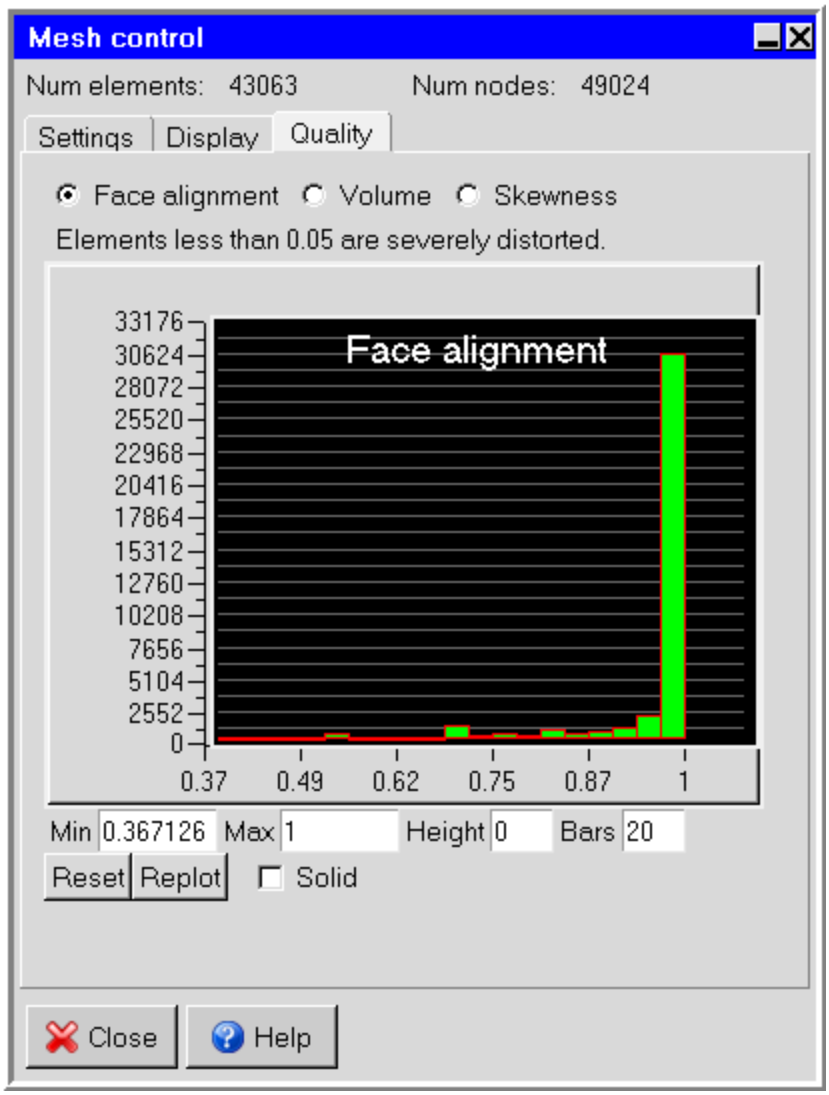

Note:

Recall from previous examples that Figure 4.15: Graph of Face alignment (p. 121) is a graph of cell number versus face alignment. For more information on face alignment as a measure of mesh quality, see Checking the Face Alignment from the Icepak User's Guide.

6. Click **Close** when you are done.

Release 2023 R1 - © ANSYS, Inc. All rights reserved. - Contains proprietary and confidential information of ANSYS, Inc. and its subsidiaries and affiliates.

4.8. Step 5: Setting up the Multiple Trials

Before we start solving the model, we will set up the parametric trials for the fan location parameter "zc".

1. Go to the **Solve menu** and select **Define trials**.

   a. The **Parameters and optimization** panel pops up.

   b. Toggle **Parametric trials** in the **Setup** tab.

   c. Select the **Design variables** tab and next to **Discrete values**, type **`0.165`** following **`0.1`**, separated by a space as shown in the Figure 4.16: The Parameters and optimization Panel (Design variables Tab) (p. 122):

   Figure 4.16: The Parameters and optimization Panel (Design variables Tab)

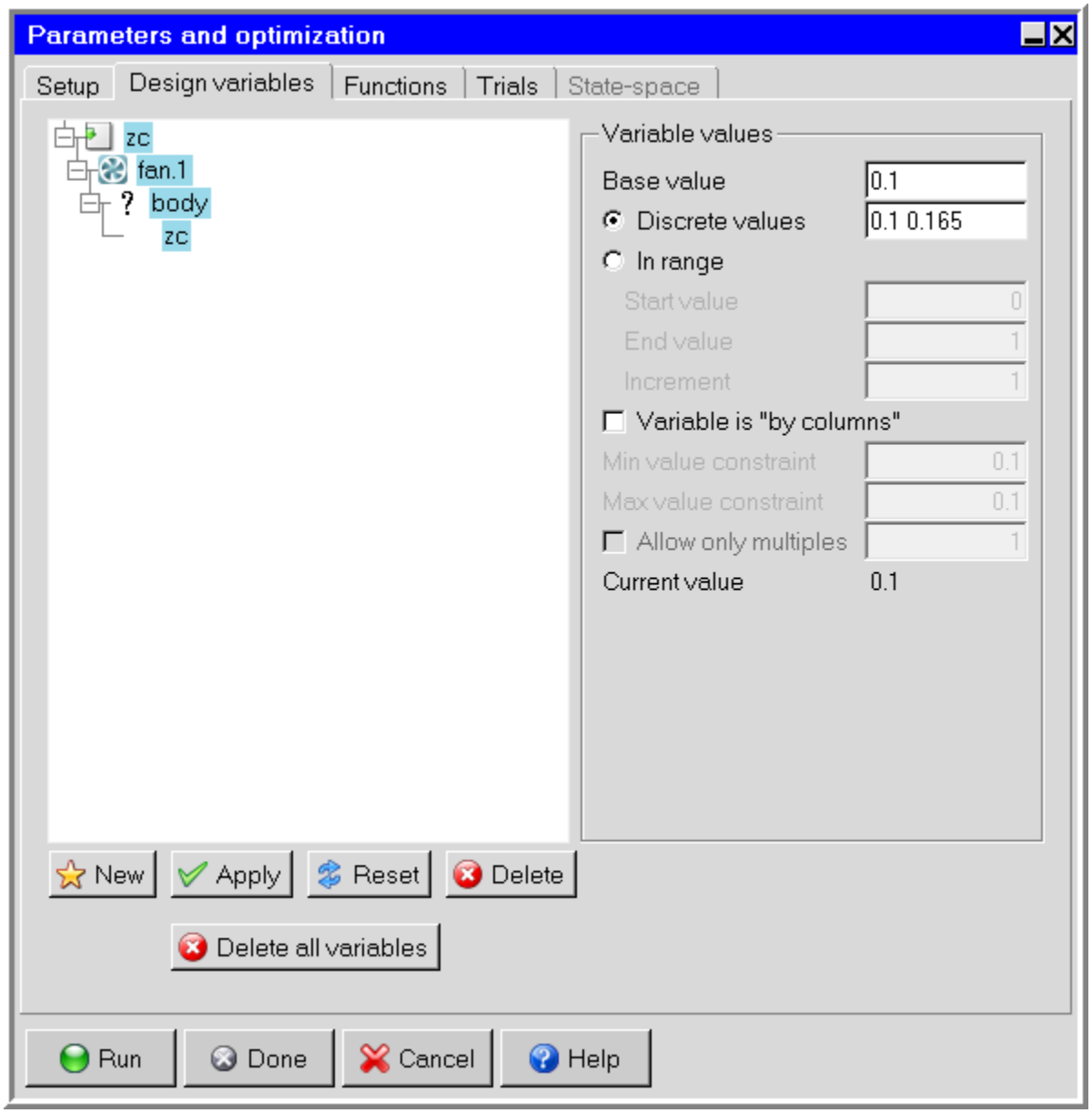

Release 2023 R1 - © ANSYS, Inc. All rights reserved. - Contains proprietary and confidential information of ANSYS, Inc. and its subsidiaries and affiliates.

d. Click **Apply**.

Note:

After the first trial has been completed, Ansys Icepak has the option of starting the following trial(s) from the default initial conditions specified in **Problem setup** panel, or from the solution(s) of the trial run(s) that have completed.

For this model, next go to the **Trials** tab and ensure the **Restart ID** is blank for the 2nd trial as shown in Figure 4.17: The Parameters and optimization Panel (Trials Tab) (p. 124). This instructs Ansys Icepak to start the 2nd run from the default initial conditions.

2. Click **Reset** button and select **Values** to use the base names for trial naming. Note that resetting automatically selects **`tr_zc_0_1`** for the second trial's **Restart ID**. Delete this entry to make it blank again.

Release 2023 R1 - © ANSYS, Inc. All rights reserved. - Contains proprietary and confidential information of ANSYS, Inc. and its subsidiaries and affiliates.

Figure 4.17: The Parameters and optimization Panel (Trials Tab)

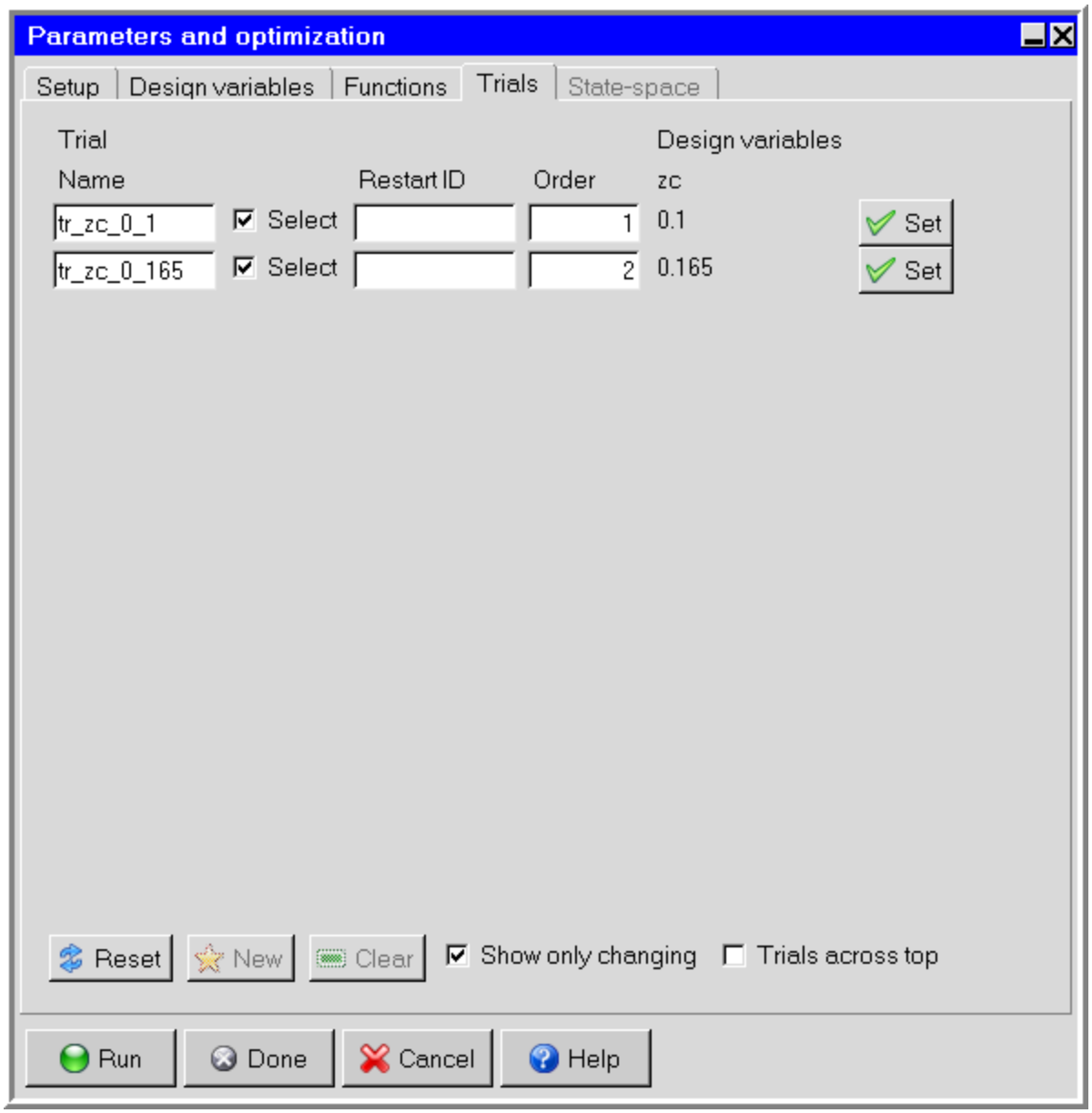

3. Click **Done** to close the **Parameters and optimization** panel.

4.9. Step 6: Creating Monitor Points

Create two monitor points by dragging and dropping (**block.1** and **grille.1**) into the **Points** folder to monitor the velocity in the grille and the temperature in one of the solid blocks. You can easily change the variables monitored by selecting them in the **Modify points** panel. Select **Velocity** for the grille and **Temperature** for the block.

Release 2023 R1 - © ANSYS, Inc. All rights reserved. - Contains proprietary and confidential information of ANSYS, Inc. and its subsidiaries and affiliates.

Figure 4.18: The Modify point Panel

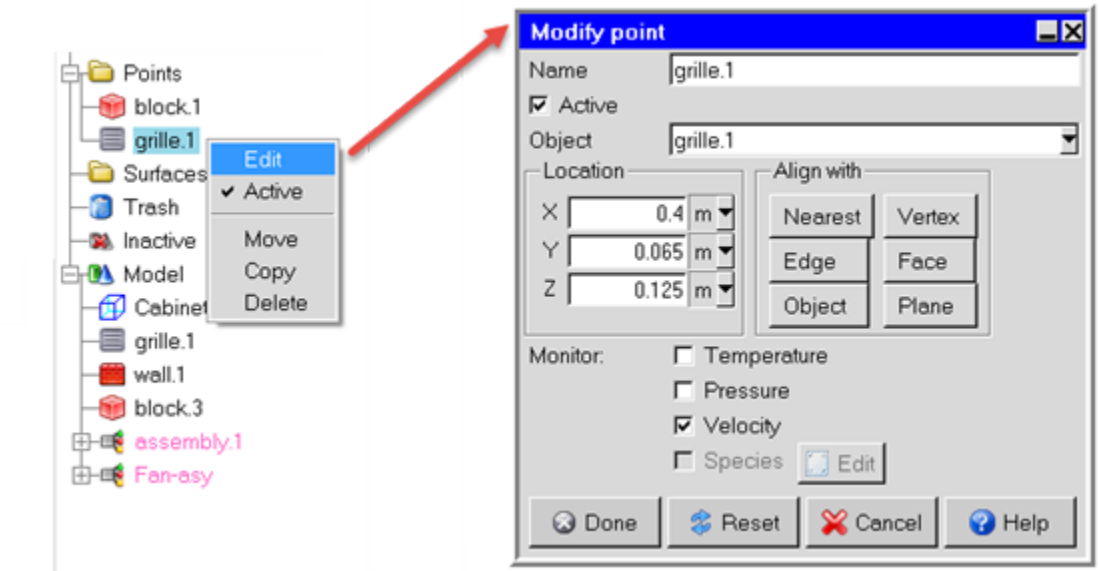

4.10. Step 7: Physical and Numerical Setting

First, use the **Basic settings** panel to determine the flow regime.

Solution settings → Basic settings

1. Enter **200** in the **Number of iterations** field in the **Basic settings** panel (Figure 4.19: The Basic settings Panel (p. 125)).

   Figure 4.19: The Basic settings Panel

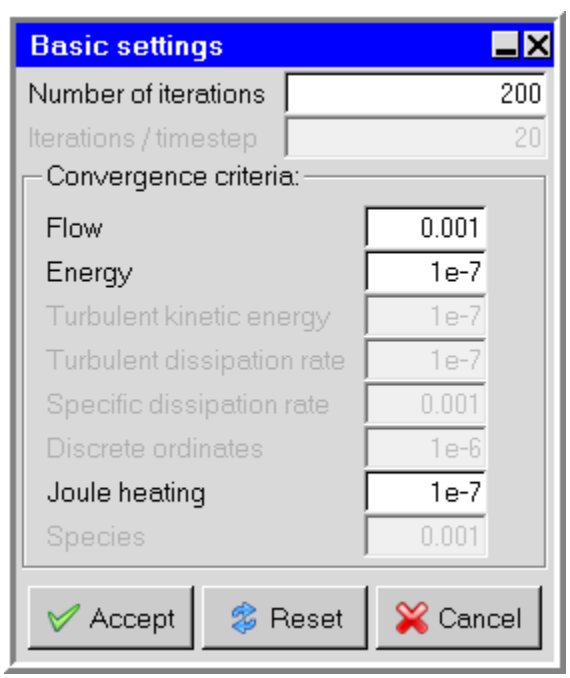

Release 2023 R1 - © ANSYS, Inc. All rights reserved. - Contains proprietary and confidential information of ANSYS, Inc. and its subsidiaries and affiliates.

2. Click **Reset**. In the message window. Ansys Icepak recommends setting the flow regime to turbulent based on the approximate Reynolds and Peclet numbers.

3. Click **Accept** to accept the new settings.

Use the **Problem setup wizard** to set up the basic parameters of the problem.

1. Right-click **Problem setup** in the **Model manager** window and select **Problem setup wizard**.

2. Follow the instructions as the **Problem setup wizard** panel guides you.

Important:

Do the following in the wizard (keep the rest of the settings at default): Select forced convection, set the flow regime to turbulent, use the zero equation turbulence model, include radiation heat transfer, and use the surface-to-surface radiation model.

---

3. Click **Done** when the panel is at step 14 of 14 to finish your problem setup.

Note:

You can edit the problem setup by expanding **Problem setup** in the **Model manager** window, then double-clicking **Basic parameters** ( ). Figure 4.20: The Basic parameters Panel (p. 127) shows the panel that appears.

Release 2023 R1 - © ANSYS, Inc. All rights reserved. - Contains proprietary and confidential information of ANSYS, Inc. and its subsidiaries and affiliates.

Figure 4.20: The Basic parameters Panel

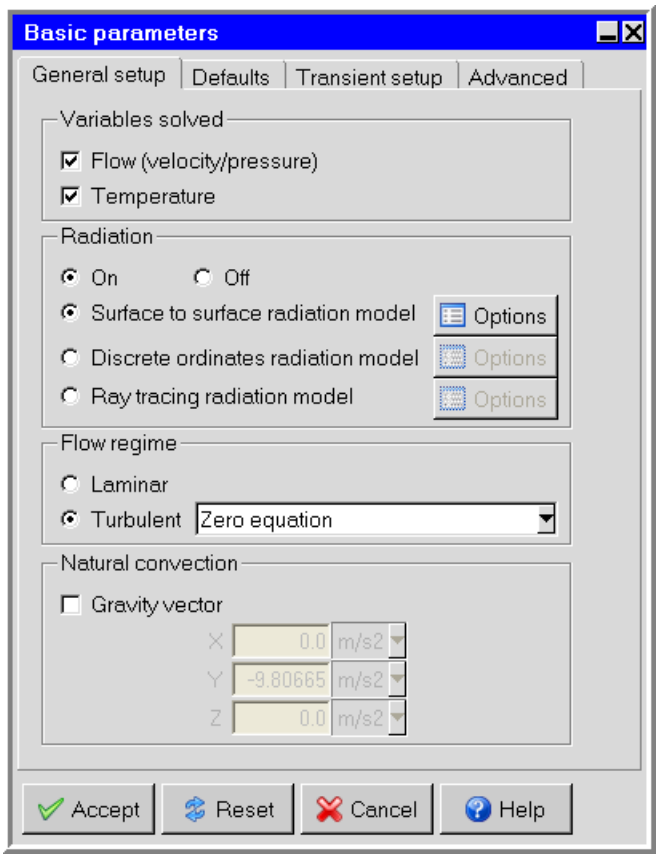

4.11. Step 8: Save the Model

Ansys Icepak saves the model for you automatically before it starts the calculation, but it is a good idea to save the model (including the mesh) yourself as well. If you exit Ansys Icepak before you start the calculation, you will be able to open the job you saved and continue your analysis in a future Ansys Icepak session. (If you start the calculation in the current Ansys Icepak session, Ansys Icepak will simply overwrite your job file when it saves the model.)

File → Save project

Alternatively, click the save button ( ) in the file commands toolbar.

4.12. Step 9: Calculate a Solution

Solve → Run solution

In the **Results** tab of the **Solve** panel that appears, enable **Write overview of results when finished**, then click **Dismiss** to close the **Solve** panel. The **Solve** panel is used for single trials only; therefore, the solution can only be calculated from the **Parameters and optimization** panel.

Solve → Run optimization

Release 2023 R1 - © ANSYS, Inc. All rights reserved. - Contains proprietary and confidential information of ANSYS, Inc. and its subsidiaries and affiliates.

In the **Parameters and optimization** panel that appears (Figure 4.17: The Parameters and optimization Panel (Trials Tab) (p. 124)), click **Run** to calculate a solution for both trials.

4.13. Step 10: Examine the Results

Once the solutions converge, load the solution ID:

Post → Load solution ID

Select the solution that corresponds to the first (parametric) run: zC = 0.1. Use the various post-processing features available in Ansys Icepak to display your solution. A description of how to generate plane cut and object face views can be found in Step 7: Examine the Results (p. 36) of the Finned Heat Sink tutorial. In particular, use the following views:

1. **Plane cut** panel to display the velocity vectors on a plane through the cabinet

   Figure 4.21: Trial 1 Vector Plots at Constant Z Plane Cut

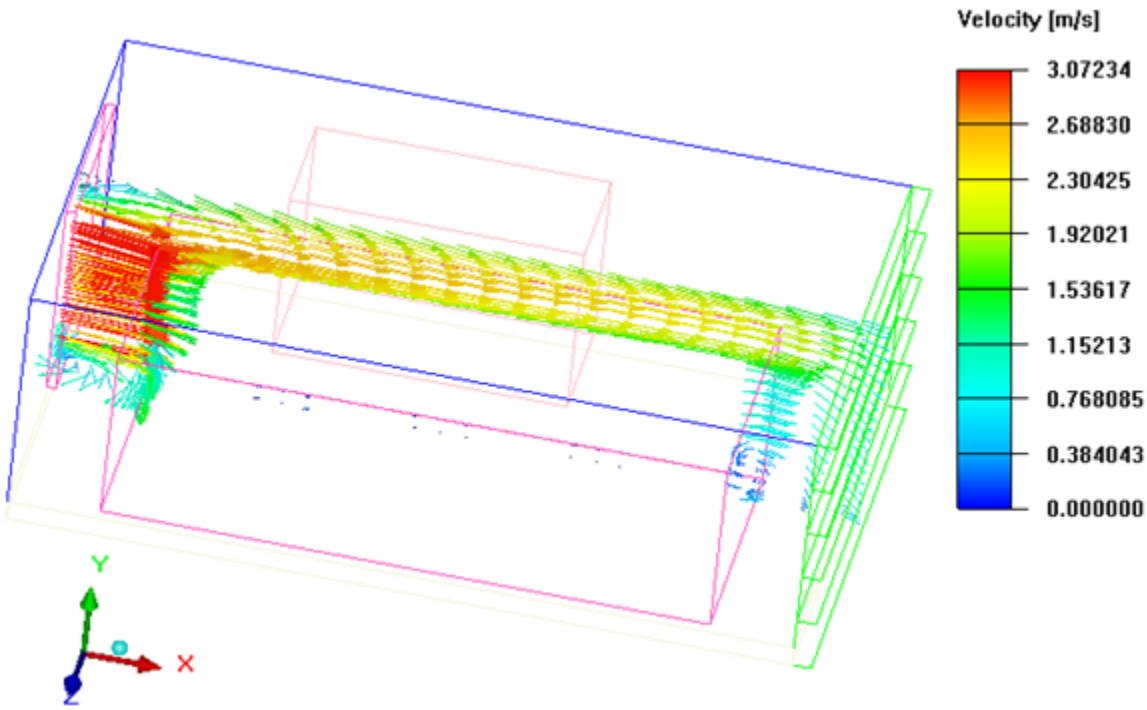

Release 2023 R1 - © ANSYS, Inc. All rights reserved. - Contains proprietary and confidential information of ANSYS, Inc. and its subsidiaries and affiliates.

Figure 4.22: Trial 2 Vector Plots at Constant Z Plane Cut

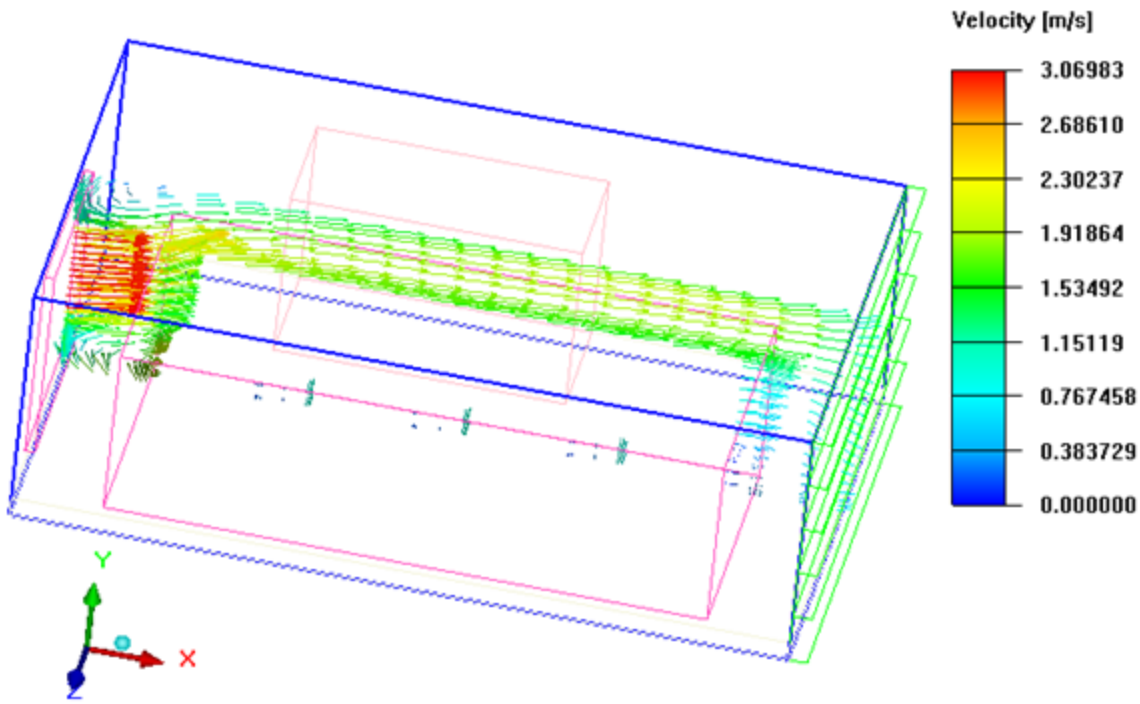

Important:

To view the 2nd parametric run, click the **Post** menu and select **Load solution ID**. Select the solution that corresponds to the second parametric run: zC = 0.165. The graphics display window updates automatically.

2. **Object face** panel to display temperature contours on `wall.1` and on all blocks

Figure 4.23: Trial 1 Temperature Contours on Blocks and PCB (wall.1)

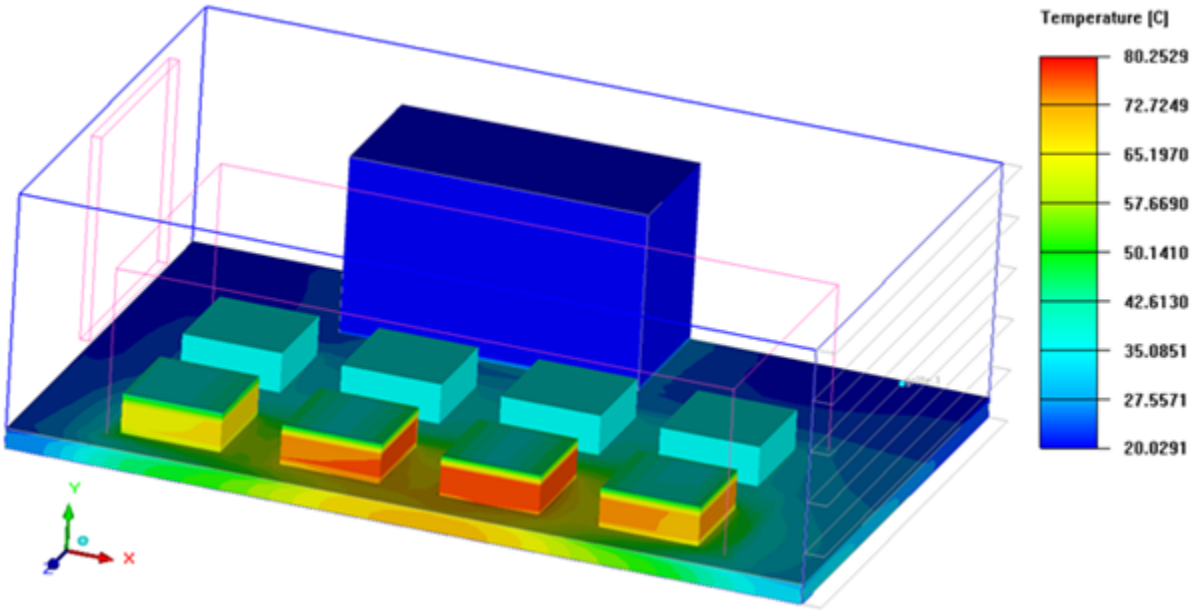

Release 2023 R1 - © ANSYS, Inc. All rights reserved. - Contains proprietary and confidential information of ANSYS, Inc. and its subsidiaries and affiliates.

Figure 4.24: Trial 2 Temperature Contours on Blocks and PCB (wall.1)

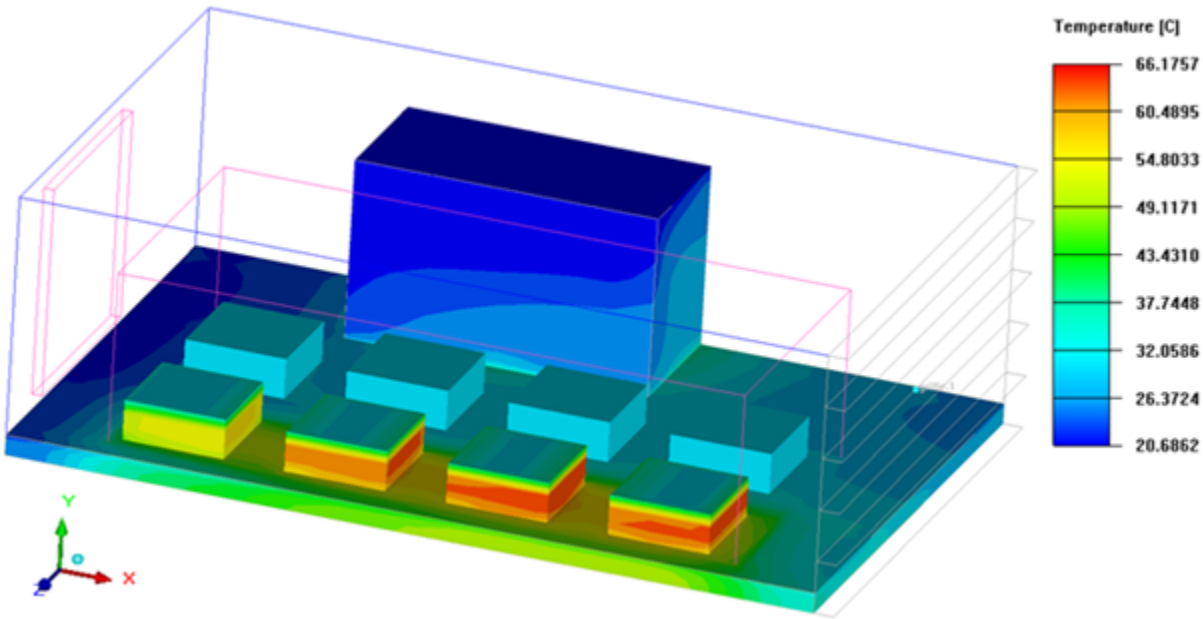

3. **Surface probe** panel to display the temperature values at a particular point

   Examine the solution sets of both runs. You will find that, in the second run, the maximum temperature is lower than in the first run and that the network blocks are the hottest objects inside the cabinet. The second trial has the fan located at zC= 0.165 which is closer to the heat sink location. This increases the flow velocity over the heat sinks and thus increases the convective heat transfer coefficient, which leads to more heat transfer from the fins (blocks) and thus reduces the maximum temperature.

4.14. Step 11: Reports

1. Overview Report

   At the end of the runs, Ansys Icepak automatically displays an overview report because you selected **Write overview of results when finished** in the **Solve** panel. This report has:

   - fan operating point
   - volume flow rate through the grille
   - heat flow from the chips
   - network junction temperatures
   - heat flows for the wall and the grille.

   Examine these results. Go to the **Report** menu and then select **Solution overview** and click **View** to display the desired overview report.

2. Summary Report

Release 2023 R1 - © ANSYS, Inc. All rights reserved. - Contains proprietary and confidential information of ANSYS, Inc. and its subsidiaries and affiliates.

You can also create a single summary report containing the results of all the trial runs completed. Go to the **Solve** menu and select **Define report**. In the **Define summary report** panel, under **ID pattern**, enter the default filter, "*", which selects all the available solution IDs. Click **New** and then hold down **Ctrl**. Select `block.1`, `block.1.1.`, `block.2`, `block.2.1`, and `block.3` from the drop-down menu under **Objects**, click **Accept** and then click **Write**. Verify that the second trial gives lower maximum and mean temperatures.

4.15. Step 12: Summary

In this tutorial, you learned how to set up and solve multiple trials to optimize a parameter, specify a dynamically updating fan curve, create a new local coordinate system, and use separate meshed assemblies to reduce mesh counts. The use of network blocks to model packages has been demonstrated as well as how to specify contact resistance using side specifications of a block object. You also learned how to generate a summary report for multiple solutions.

We repeat some of the tips and best practices found in this tutorial for your convenience:

1. Best Practices

   a. Start a fan curve specification with a zero flow rate and end the specification with a zero pressure.

   b. View the HTML summary report (**View** → **Summary (HTML)**) to ensure proper specification of geometries, properties, and materials for each object.

   c. Reduce mesh counts and consequently decrease run times in regions requiring less resolution by creating separately meshed assemblies when appropriate. Also select suitable slack values that improve the convergence rate while avoiding mesh bleeding.

   d. Select the **Allow minimum gap changes** option in the **Misc** tab of the **Mesh control** panel to allow Ansys Icepak to avoid unnecessary meshing due to inadvertent misalignments in the model. This is suitable for this tutorial but may not be in other projects.

   e. Create monitor points of relevant quantities (temperature, pressure, or velocity) to help judge convergence alongside residuals.

   f. Use the **Problem setup wizard** for guided problem setup. Edit the problem setup if needed using the **Basic parameters** panel.

2. Tips and Tricks

   a. Use the **RPM** under the **Swirl** tab as a fan's nominal RPM. Use the **Operating RPM** in the **Options** tab as the working RPM value, used in conjunction with the nominal RPM to update the fan curve according to the fan laws.

   b. Display different types of shading to help visualize parts of your model better by editing an individual object in the **Model manager** window or by applying it globally (**View** → **Default shading**).

Release 2023 R1 - © ANSYS, Inc. All rights reserved. - Contains proprietary and confidential information of ANSYS, Inc. and its subsidiaries and affiliates.

c. Click near the edge of a face in the **Morph faces** mode if you have difficulty selecting faces. Clicking correctly should highlight the entire face in a red shading.

> **Note:**
>
> Use the left mouse button first to select a face, then accept the selection with the middle mouse button. Right-click to cancel your selection or to exit the **Morph faces** mode.

d. Create hollow blocks to cut out a section of the cabinet from the computational domain. Hollow blocks only alter flow patterns and do not participate in solid conduction heat transfer.

e. Use the appropriate **Restart ID** for your trials' initial conditions when running a parametric optimization to improve convergence rate.

4.16. Step 13: Additional Exercise to Model Higher Altitude Effect

You can also use the final model to simulate the effects of higher altitudes. In order to model this correctly, new air properties at the particular altitude need to be defined and assigned to the default fluid. The density of air is the most affected property and gets lower as altitude increases. The data for air properties at a different altitude is presented in many handbooks and may even include temperature change with it. For an altitude of 3000 m, you can select the available library material `Air@(3000m)`. Note that you can create and store a custom material having any properties in the material library for use in any project.

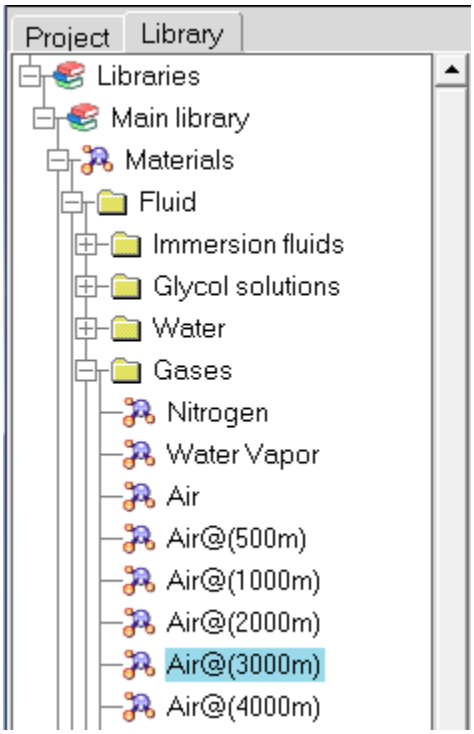

In the **Model manager** window, select **Problem setup** → **Basic parameters** and assign the new air material to be the default fluid.

Release 2023 R1 - © ANSYS, Inc. All rights reserved. - Contains proprietary and confidential information of ANSYS, Inc. and its subsidiaries and affiliates.

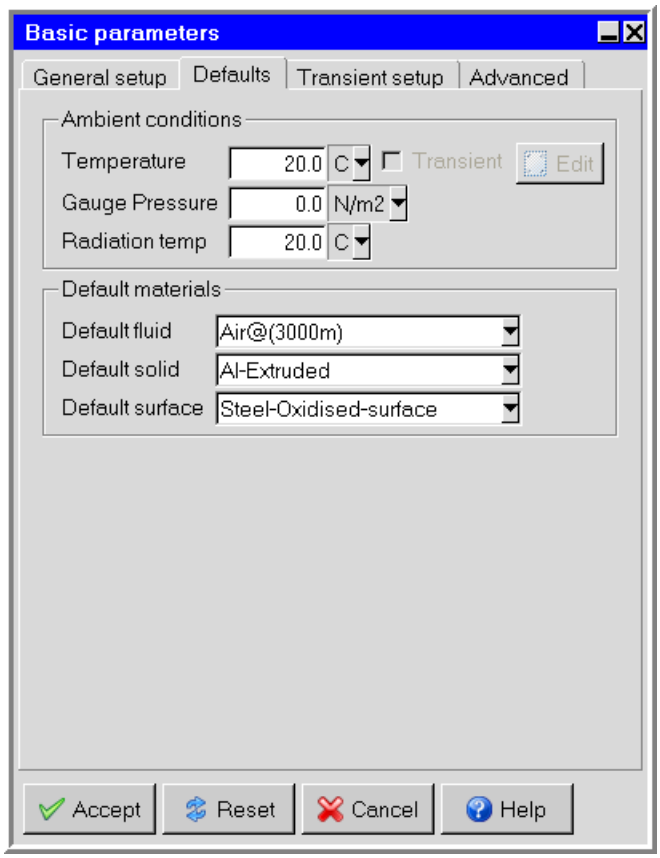

On the **Advanced** tab under **Altitude effects**, select **Altitude** and enter `3000` m. Then select **Update fan curves** to automatically update fan curves to account for altitude effects.

Release 2023 R1 - © ANSYS, Inc. All rights reserved. - Contains proprietary and confidential information of ANSYS, Inc. and its subsidiaries and affiliates.

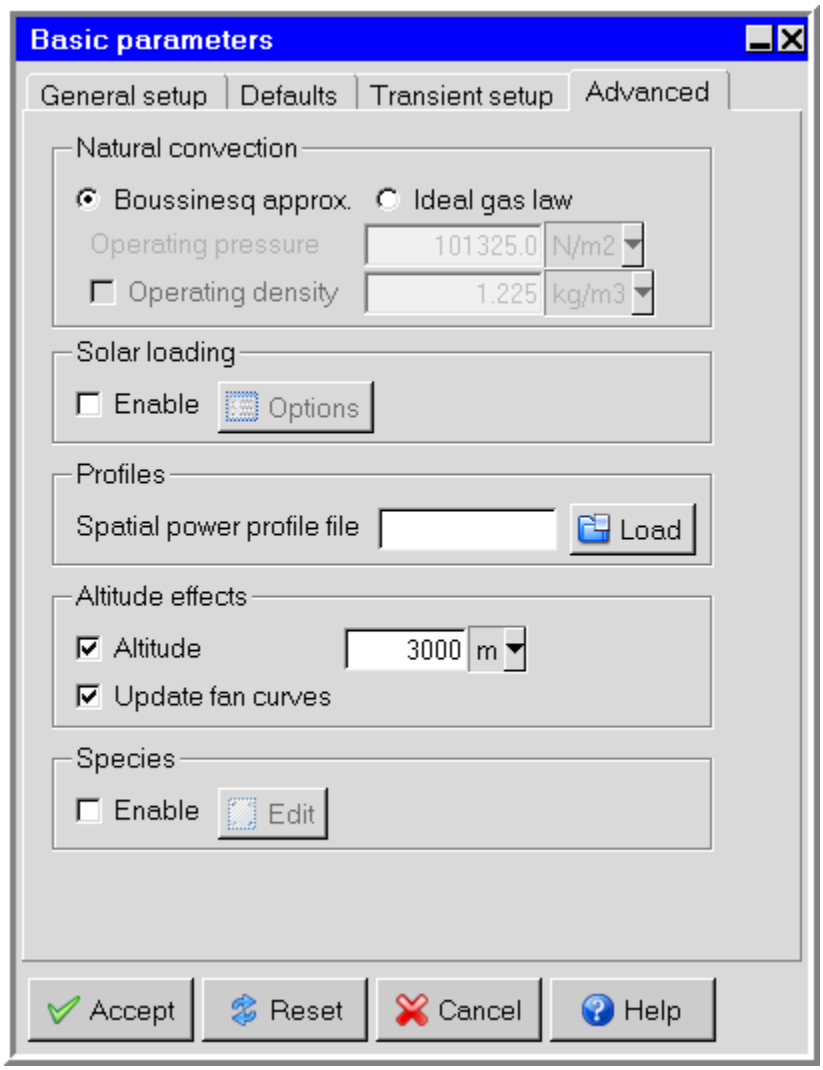

Release 2023 R1 - © ANSYS, Inc. All rights reserved. - Contains proprietary and confidential information of ANSYS, Inc. and its subsidiaries and affiliates.