International Journal of Electronic and Electrical Engineering.
ISSN 0974-2174, Volume 7, Number 1 (2014), pp. 19-24
© International Research Publication House
http://www.irphouse.com

Design and Implementation of PID Controller for Second Order Plant and Comparison of its Performance with Fuzzy Logic based Controller

Ashok Kumar Kumawat[1], Sandeep Rana[2] and Ashish Sharma[3]

[1,2]EE Department, Delhi Technological University, New Delhi-110042
[3] E&C Department, Jaipur Engineering College, Jaipur-303101

Abstract

Controller designing for various day to day practical processes has been a challenging task for designers. Several issues such as stability, steady state error, effect of parameter variations and speed etc. must be considered for designing a controller. In this communication, an arbitrarily underdamped second order plant is implemented which has highly oscillatory response. Then a PID controller is designed for improving the system stability. Further a fuzzy logic Controller is also designed for the same second order system and its result with PID controller is compared. Simulation of Fuzzy logic controller is done on MATLAB and for PID controller ORCAD PSPICE is used. Also hardware implementation of the system with PID controller is done using Op-Amp 741 IC.

Keywords: PID controller, Fuzzy logic controller, Op-amp 741.

1. Introduction

Though there is a huge advancement in advance control techniques, PID (Proportional-Integral-Derivative) controller is still widely used in process industries. The reason for preferring PID control strategy over others is its simple and well understood architecture [1]. If the plant model is known then the performance of PID controller is better than the other intelligent controllers. The major advantages of PID controller include its robustness and capability to withstand in wide operating conditions [5].

On the other hand, intelligent control technique like fuzzy logic based controller is used most frequently in the processes where plant model is not known. In Fuzzy logic controllers, the expert knowledge is translated into an automatic control scheme

[2],[3]. This control strategy is capable of finding precise solution from approximate information which makes it suitable for controlling non-linear and complex system.

In this paper PID controller is designed in hardware and software for an unstable system. Then further a fuzzy logic controller is designed for the same system and the performance of both types of controllers is compared. The paper is organised as follows; the section (II) describes the plant to be studied. Section (III) and (IV) is devoted to basic introduction of PID and Fuzzy Logic based controller respectively. The experimental work is discussed in section (V). Results are presented in section (VI) and at last paper is concluded in section (VI).

2. The Modelling of Plant

A second order underdamped plant [1] to be studied can be described in terms of its input output behaviour as follows:

$$\frac{v_{out}}{v_{in}} = \frac{K_1}{s^2+2\xi\omega_n s+\omega_n^2} \tag{1}$$

Above standard second order transfer function can be implemented with the help of Operational amplifier (Op-amp), resistors and capacitors [4]. The circuit diagram for this system is shown in Fig.1 and labelled as "system". The normal mathematical analysis leads the transfer function of "system" as in Eq. (1) where

$$K_1 = \frac{A_f}{(R_{16}R_{17}C_4C_5)}; \quad A_f = 1 + \frac{R_{19}}{R_{18}}; \quad \xi = \frac{3-A_f}{2}; \quad \omega_n = \frac{1}{\sqrt{(R_{16}R_{17}C_4C_5)}}$$

3. Proportional-Integral-Derivative Control

Proportional-Integral-Derivative (PID) Control is comprised of three type of control action;

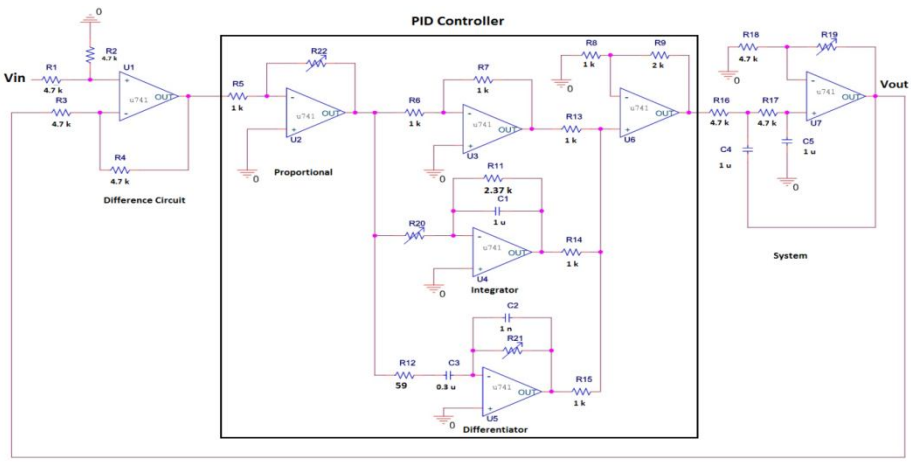

Fig. 1: Second order unstable System with PID controller.

Proportional, integral and derivative. Proportional control provides the control action that is directly proportional to the error signal (the difference between the desired and measured variable). The integral control is used to eliminate steady state error but it degrades the quality of transient response. Finally the derivative control is used for improving the transient response. The actuating signal (control signal) in ideal PID is given as [1]:

$$e_a(t) = Ke(t) + K_i \int_0^t e(\tau)d\tau + K_d \frac{de(t)}{dt} \Rightarrow E_a(s) = \left[K + \frac{K_i}{s} + sK_d\right] E(s) \quad (1)$$

where K, K_i and K_d are proportional, integral and derivative constants respectively. PID controller with unstable system is shown in Fig. (1).

4. Fuzzy Logic Controller (FLC)

The FLC for the unstable system has two inputs, one output and nine fuzzy rules. Input membership functions are shown with suitable range by Fig.2 (a,b). The input variables 'Error' and 'change in error' are passed on these membership functions to generates input fuzzy variables which are then used (fuzzified) to evaluate the fuzzy rules (Fig.2(c)) and generate output fuzzy variables which are then defuzzified (Weight average method) to generate output as a input for the system[3].

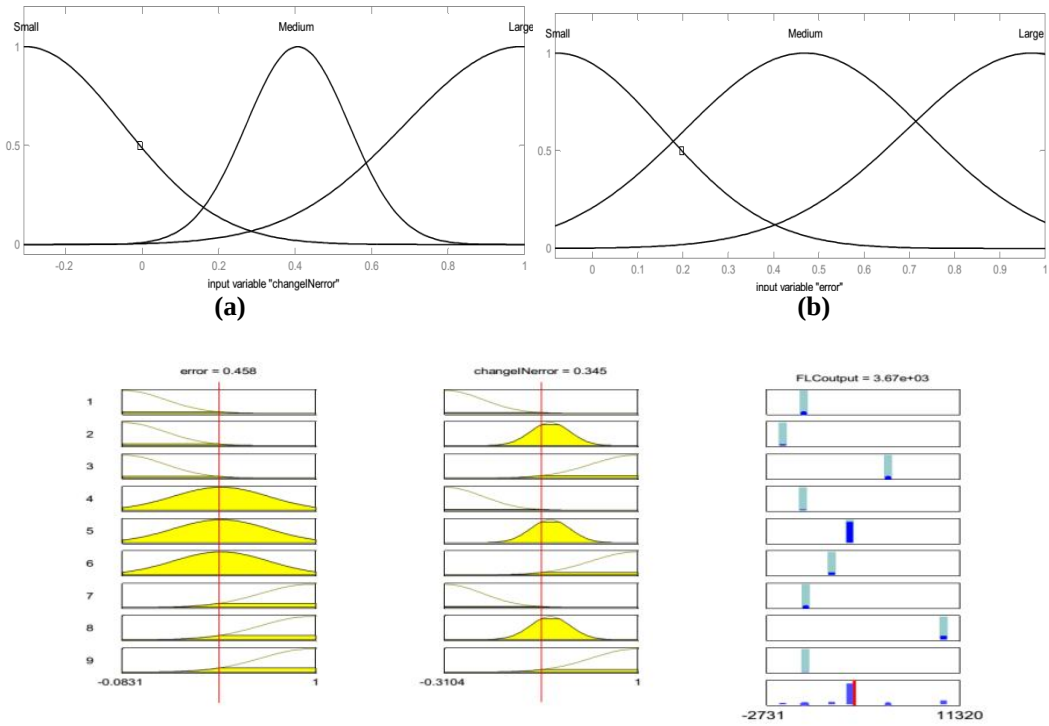

Fig. 2: (a) Input membership function of change in error (b) Input membership function of error (c) Rule Viewer for FLC

5. The Experimental work:

5.1 Open loop system

Simulation of step response for an open loop system of Fig.(1) is done on PSPICE using inbuilt model of uA741 with power supply ±15V. The required values of different components to make the plant highly unstable are taken as: $R_{16} = R_{17} = R_{18} = 4.7k\Omega, C_4 = C_5 = 1uF, R_{19} = 9.3k\Omega$. The simulation result of step response for open loop system is shown in Fig.(3) which shows highly oscillatory behaviour of open loop system.

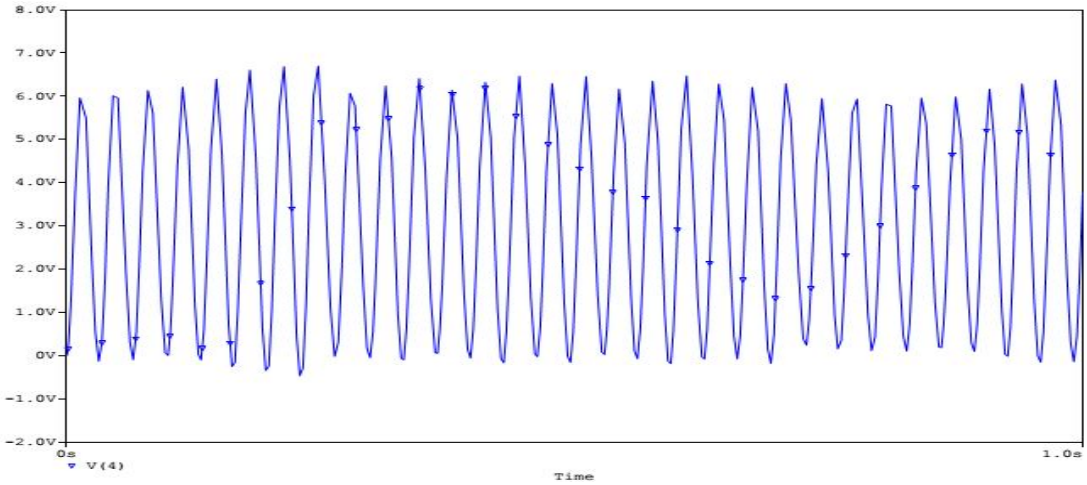

Fig. 3: PSPICE Simulation for the step response of open loop system.

5.2 Plant with PID controller

The circuit diagram for plant with PID controller is shown in Fig.(1) which is simulated in PSPICE as well as implemented in hardware by using components values as shown in Fig.(1). All variable resistances are used for tuning purpose.

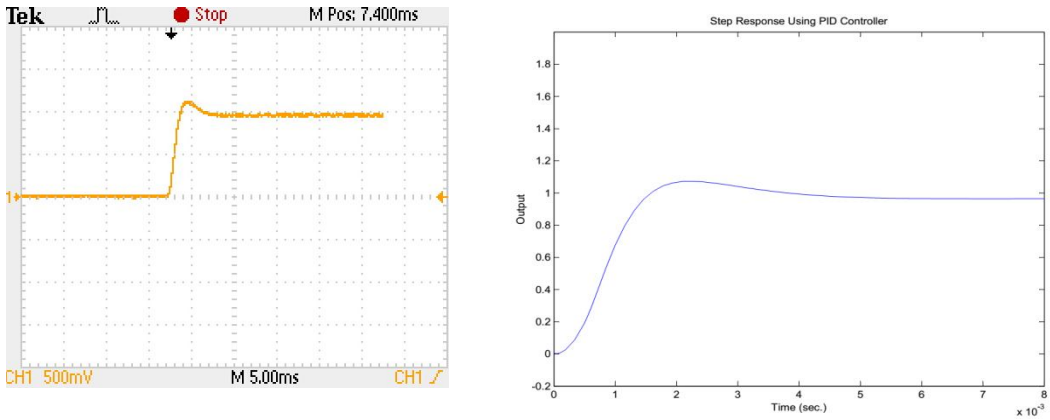

(a) **(b)**

Fig. 4: Step Response using PID controller (a) Hardware Result (b)PSPICE Simulation Result

The desired output response is obtained for the values of different variable resistances as 9.3kΩ, 23.7kΩ, 5.93kΩ and 8.1kΩ for R_{19}, R_{20}, R_{21} and R_{22} respectively. The simulation and practical results of step response for plant with PID controller is shown in Fig.(4).

5.3 Plant with Fuzzy Logic based Controller

FLC is designed by ANFIS toolbox of MATLAB. The Simulink block diagram and its step response is shown in Fig.(5)

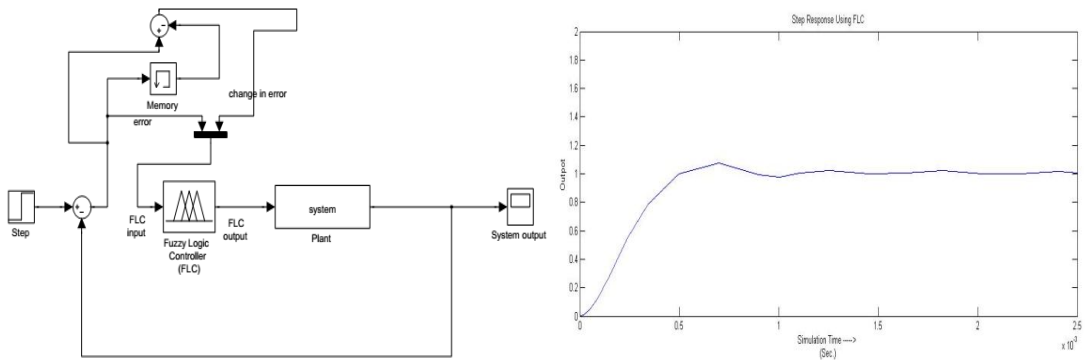

(a) **(b)**

Fig. 5: (a) Simulink Block Diagram of FLC (b) Step Response of system using FLC.

6. Results

The system behaviour in terms of transient and steady state response for PID and fuzzy logic based controller is compared in Table (1).

Table 1: Comparative analysis of PID controller and FLC.

	Rise Time [ms]	**Maximum overshoot [%]**	**Settling Time(2%) [ms]**	**Steady state error [mV]**
PID (simulation)	0.9175	11.16167	1.4313	34.704
PID (practical)	1.4	12.24	3.6	30
FLC	0.49	5.39	1.37	20

7. Conclusion

The result of transient and steady state response for PID controller based system obtained from hardware and simulation, shows quite similarity as listed in Table (1). The FLC shows better transient and steady state response than PID controller which is quite obvious from Table (1).

References

[1] I.J. Nagrath, M.Gopal, “Control System Engineering” *Book*, New Age International Publishers, 2006

[2] T.J.Ross, “Fuzzy Logic with Engineering applications”,Book,Wiley India,2009.

[3] T. Takagi and M. Sugeno, “Fuzzy identification of systems and its application to modelling and control”, IEEE Transaction on systems, Man, Cybermetics, Vol.15,PP.116-132,1985.

[4] R.A. Gayakwad, “Op-Amps and Linear Integrated Circuits.” *Book*, Pearson Prentice Hall, 2007.

[5] K.Astrom, K. and T. Hagglund, “PID Controllers: Theory, Design, and Tuning”, Instrument Society of America, ISBN 1-55617-516-7, 1995.