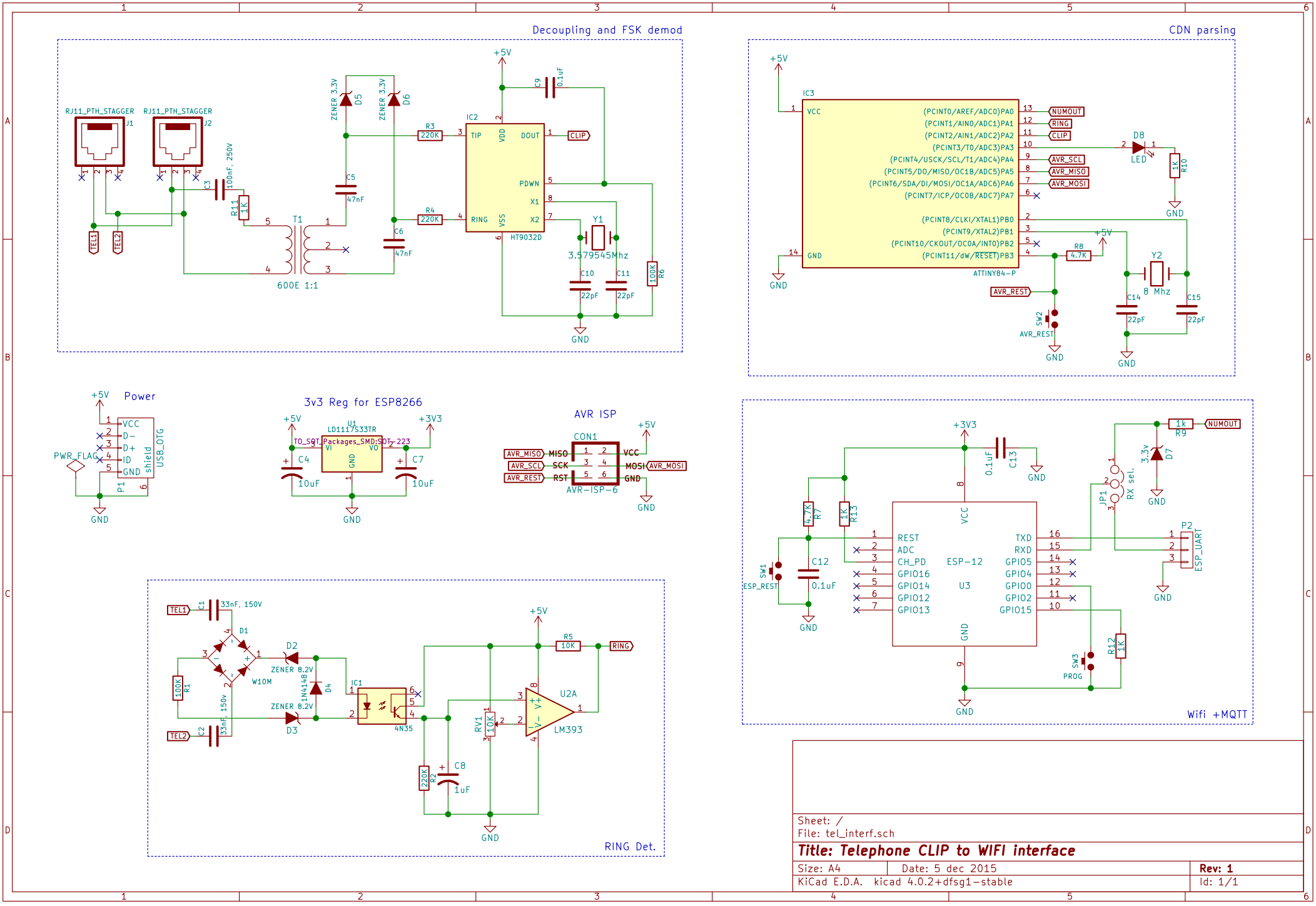

Sheet: /
File: tel_interf.sch

Title: Telephone CLIP to WIFI interface

Size: A4	Date: 5 dec 2015	Rev: 1
KiCad E.D.A. kicad 4.0.2+dfsg1-stable		Id: 1/1