SEDEMAC

Innovative Controls

Motor & Engine Controls Product Portfolio

ABOUT US

SEDEMAC's vision is to be a globally respected controls company developing innovative technologies and products that see widespread use.

At its core, SEDEMAC is the coming together of talented engineers with the zeal for development and large scale deployment of innovative control technologies & products.

Founded in a lab at the Indian Institute of Technology, Bombay, **India**; SEDEMAC currently has world-class development & manufacturing facilities in Pune, India. SEDEMAC's products are now used on millions of vehicles and other equipment world-wide.

SEDEMAC sells innovative and critical-to-the-application control products, incorporating fresh control technologies conceived and developed inhouse, to the leaders of large markets. **These products are manufactured in the millions each year in our own world-class manufacturing facilities.**

Pallod Farms, Baner, Pune - 411045, MH

sales@sedemac.com

www.sedemac.com

PRODUCT PORTFOLIO

Electric Powertrains

ISAAC 1200

ISAAC 1500

ISAAC 3500

Centauri 3500

ISAAC 5K

ISAAC 7K

ISAAC 15K MV

ISAAC 15K LV

ISAAC 25K

ISAAC 350 Basic

ISAAC 350 Advanced

Stark S

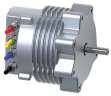
Logan 2000

Logan 3500

ICE Powertrains

Sensorless Integrated Starter Generators

EFI: Large Engines

EFI: Small Engines

ISG + EFI

Note: Product portfolio is indicative, subject to further expansion.

TABLE OF CONTENTS

Electric Powertrains

ISAAC 1200 5
ISAAC 1500 6
ISAAC 3500 7
Centauri 3500 8
ISAAC 5K 9
ISAAC 7K 10
ISAAC 15K MV 11
ISAAC 15K LV 12
ISAAC 25K LV 13
ISAAC 350 Base 14
ISAAC 350 Advanced 15
Product Features List 16
Stark S 17
LOGAN 2000 18
LOGAN 3500 19

ICE Powertrains

Sensorless Integrated Starter Generators 20
Fuel Injection ECUs for Large Engines
Gas Powered Equipment 21
Fuel Injection ECUs for Small Engines
Petrol/Gasoline Equipment 22
ISG + EFI 23

ISAAC 1200

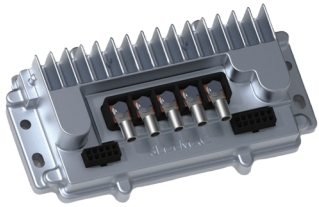

Key Power Specifications	
Battery voltage	Intended for equipment with nominal 48V battery or 60V battery or 72V battery
Continuous motor line current for 30 minutes(1)	40A RMS at 25 degC ambient for 48V system 32A RMS at 25 degC ambient for 60V system 27A RMS at 25 degC ambient for 72V system
Peak motor line current for 30 seconds(2)	130A RMS at 25 degC ambient for 48V system 105A RMS at 25 degC ambient for 60V system 85A RMS at 25 degC ambient for 72V system"
Operating temperature limits	-10 degC to +80 degC

Technical Specification

Length	182 mm
Width	105 mm
Height	40 mm
Ingress Protection	IP 65

1. Tests assumed to be conducted with controller inside climate chamber, with nominal air circulation because of thermal management fan of climate chamber
2. Test assumed conducted with controller soaked in ambient temperature before application of peak motor line current. After application of mentioned currents, current provided by controller gradually derates and settles at steady state value of ~37A RMS or ~32A RMS or ~27A RMS depending on controller configuration selected.
3. Hall sensor inputs are not required with SEDEMAC Sensorless Control

IO	Example Use Case
CAN H / CANL	CAN high/low lines (non-isolated)
Digital switches (7 qty)	These are 0-12V digital or 0-48V digital switches. Example use cases are: (a) Brake input (b) Reverse input (c) Mode selection input (d) Multi function switch
SWC / digital switch #8	SWC stands for "single wire communication" which can be used to communicate with HMI. Alternately, the pin can be configured as an additional digital switch.
Ignition key	Wake-up / sleep line
Throttle module (2 qty)	Each throttle module comprises of a 5V signal, a ground return signal, and the throttle signal input
Anti-theft signal	Can be used as an input to anti-theft device to indicate equipment motion while equipment is idle.
NTC	Temperature dependent resistor input that can be used to measure motor winding temperature
LSD #1	0.5A / 48V low side drive
Position sensor options	(Optional) Digital hall A, B, C interface

Note: Product specs are for general reference only and are subject to change without notice. Please check with us on the latest product specifications.

ISAAC 1500

Technical Specification

Length	126 mm
Width	116 mm
Height	59 mm
Ingress Protection	IP 67

1. Tests conducted with controller inside climate chamber, with nominal air circulation because of thermal management fan of climate chamber
2. Test conducted with controller soaked in ambient temperature before application of peak motor line current. After application of mentioned currents, current provided by controller gradually derates and settles at steady state value of ~47A RMS or ~40A RMS depending on controller configuration selected.
3. Hall sensor inputs are not required with SEDEMAC Sensorless Control

Note: Product specs are for general reference only and are subject to change without notice. Please check with us on the latest product specifications.

Key Power Specifications	
Battery voltage	Intended for equipment with nominal 48V battery or 60V battery
Continuous motor line current for 30 minutes[1]	47A RMS at 45 degC ambient for 48V system 40A RMS at 45 degC ambient for 60V system
Peak motor line current for 30 seconds[2]	150A RMS at 25 degC ambient for 48V system 135A RMS at 45 degC ambient for 48V system 125A RMS at 25 degC ambient for 60V system 115A RMS at 45 degC ambient for 60V system
Peak motor line current for 60 seconds(1)	35A RMS for high power config 30A RMS for standard config
Rated ambient temperature	45 degC

IO	Example Use Case
CAN H / CANL	CAN high/low lines (non-isolated)
Digital switches (6 qty)	These are 0-12V digital or 0-48V digital switches. Example use cases are: (a) Brake input (b) Reverse input (c) Mode selection input (d) Multi function switch
SWC / digital switch #7	SWC stands for "single wire communication" which can be used to communicate with HMI. Alternately, the pin can be configured as an additional digital switch.
Ignition key	Wake-up / sleep line
Throttle module (2 qty)	Each throttle module comprises of a 5V signal, a ground return signal, and the throttle signal input
Anti-theft signal	Can be used as an input to anti-theft device to indicate equipment motion while equipment is idle
NTC	Temperature dependent resistor input that can be used to measure motor winding temperature
LSD #1	0.5A / 48V low side drive
LSD #2 / digital switch #8	0.5A / 48V low side drive. Alternately, the pin can be used as an additional digital switch
Position sensor options	(Optional) Digital hall A, B, C interface

ISAAC 3500

Technical Specification

Length	126 mm
Width	116 mm
Height	59 mm
Ingress Protection	IP 67

1. Tests conducted with controller inside climate chamber, with nominal air circulation because of thermal management fan of climate chamber
2. Test conducted with controller soaked in ambient temperature before application of peak motor line current. After application of mentioned currents, current provided by controller gradually derates and settles at steady state value of ~47A RMS or ~40A RMS depending on controller configuration selected.
3. Hall sensor inputs are not required with SEDEMAC Sensorless Control

Note: Product specs are for general reference only and are subject to change without notice. Please check with us on the latest product specifications.

Key Power Specifications	
Battery voltage	Intended for equipment with nominal 48V battery or 60V battery
Continuous motor line current for 30 minutes(1)	80A RMS at 45 degC ambient for 48V system 70A RMS at 45 degC ambient for 60V system
Peak motor line current for 30 seconds(2)	240A RMS at 25 degC ambient for 48V system 212A RMS at 45 degC ambient for 48V system 200A RMS at 25 degC ambient for 60V system 180A RMS at 45 degC ambient for 60V system
Peak motor line current for 60 seconds(1)	35A RMS for high power config 30A RMS for standard config
Rated ambient temperature	45 degC

IO	Example Use Case
CAN H / CANL	CAN high/low lines (non-isolated). Sleep / wake-up over CAN is supported.
Digital switches (6 qty)	These are 0-12V digital or 0-48V digital switches. Example use cases are: (a) Brake input (b) Reverse input (c) Mode selection input (d) Multi function switch
SWC / digital switch #7	SWC stands for “single wire communication” which can be used to communicate with HMI. Alternately, the pin can be configured as an additional digital switch.
Ignition key	Wake-up / sleep line
Throttle module (2 qty)	Each throttle module comprises of a 5V signal, a ground return signal, and the throttle signal input
Anti-theft signal	Can be used as an input to anti-theft device motion while equipment is idle.
NTC	Temperature dependent resistor input that can be used to measure motor winding temperature
LSD #1	0.5A / 48V low side drive
LSD #2 / digital switch #8	0.5A / 48V low side drive. Alternately, the pin can be used as an additional digital switch
Position sensor options	Either of below four options can be used: (a) Digital hall A, B, C interface (b) Analog hall U, V, W interface (c) Sin/cos interface (d) SSI interface

Centauri 3500

Technical Specification

Length	196 mm
Width	130 mm
Height	59 mm
Ingress Protection	IP 67

1. Tests conducted with controller inside climate chamber, with nominal air circulation because of thermal management fan of climate chamber
2. Test conducted with controller soaked in ambient temperature before application of peak motor line current. After application of mentioned currents, current provided by controller gradually derates and settles at steady state value of ~80A RMS or ~70A RMS depending on controller configuration selected.
3. Hall sensor inputs are not required with SEDEMAC Sensorless Control

Note: Product specs are for general reference only and are subject to change without notice. Please check with us on the latest product specifications.

Key Power Specifications	
Battery voltage	Intended for equipment with nominal 48V battery or 60V battery
Continuous motor line current for 30 minutes[1]	40A RMS at 45 degC ambient for 48V system 35A RMS at 45 degC ambient for 60V system
Peak motor line current for 30 seconds[2]	120A RMS at 25 degC ambient for 48V system 106A RMS at 45 degC ambient for 48V system 100A RMS at 25 degC ambient for 60V system 90A RMS at 45 degC ambient for 60V system
Operating temperature limits	-10 degC to +80 degC

IO	Example Use Case
CAN H / CANL (1 qty)	CAN high/low lines (non-isolated). Sleep / wake-up over CAN is supported.
Digital switches (10 qty)	These are 0-12V digital or 0-48V digital switches. Example use cases are: (a) Brake input (b) Reverse input (c) Mode selection input (d) Multi function switch
SWC / digital switch #7	SWC stands for "single wire communication" which can be used to communicate with HMI. Alternately, the pin can be configured as an additional digital switch.
Ignition key	Wake-up / sleep line
Throttle module (2 qty)	Each throttle module comprises of a 5V signal, a ground return signal, and the throttle signal input
Anti-theft signal	Can be used as an input to anti-theft device to indicate equipment motion while equipment is idle.
NTC	Temperature dependent resistor input that can be used to measure motor winding temperature
LSD #1	0.5A / 48V low side drive
LSD #2 / digital switch #8	0.5A / 48V low side drive. Alternately, the pin can be used as an additional digital switch
Position sensor options	Either of below four options can be used: (a) Digital hall A, B, C interface (b) Analog hall U, V, W interface (c) Sin/cos interface (d) SSI interface

ISAAC 5K

Technical Specification

Length	170 mm
Width	150 mm
Height	79 mm
Ingress Protection	IP 67

1. Tests conducted with controller inside climate chamber, with nominal air circulation because of thermal management fan of climate chamber
2. Test conducted with controller soaked in ambient temperature before application of peak motor line current. After application of mentioned currents, current provided by controller gradually derates and settles at steady state value of ~47A RMS or ~40A RMS depending on controller configuration selected.
3. Hall sensor inputs are not required with SEDEMAC Sensorless Control

Note: Product specs are for general reference only and are subject to change without notice. Please check with us on the latest product specifications.

Key Power Specifications	
Battery voltage	Intended for equipment with 48V systems
Continuous motor line current with air flow[1]	135A RMS
Peak motor line current for 30 seconds[2]	270A RMS
Rated ambient temperature	-10 degC to +80 degC

IO	Example Use Case
CAN H / CANL (1 qty)	CAN high/low isolated CAN lines.
Digital switches (10 qty)	These are 0-12V Among the 8 qty switches, 6 qty digital switches are referenced with 48V ground, while 2 qty switches are referenced with 12V ground. Example use cases are: (a) Forward switch (b) Reverse switch (c) Mode selection switch (d) Multi function switch (e) Gear switch (f) Clutch swith
Pulse train	12V pulse input, for example, to measure wheel speed
Ignition key (KSI)	Intended to be to be used to wake-up microcontroller
Throttle module (2 qty)	Each throttle module comprises of a 5V/150 mA power supply, a ground return signal, and the throttle signal input
Brake module (2 qty)	These are analog brake signal inputs. Supply of brake input is shared with the 2 qty of throttle modules.
NTC	Temperature dependent resistor input that can be used to measure motor winding temperature
LSD (2 qty)	2A / 12V low side drive. Example use case of the LSD is to drive motor fooling fan and/or controller cooling fan
HSD (2 qty)	2A / 12V high side drive. Example use case is to power brake lamp, reverse lamp etc.
Position sensor options	Either of below configurations will work: (a) Analog hall U, V, W interface. (b) Sin +, Sin -, Cos+, Cos- interface (c) ABZ or AB encoder interface for induction motors A 5V dedicated regulator is provided.

ISAAC 7K

Technical Specification

Length	170 mm
Width	150 mm
Height	79 mm
Ingress Protection	IP 67

1. Airflow of 2 m/s considered
2. Line currents mentioned in "peak motor line current" specification assume that the controller is soaked in ambient temperature of 25 degC before application of peak motor line current.

Important Note: 12V and 48V network in the controller are isolated inside the controller. The 12V ground and 48V ground may or may not be shorted in the equipment outside the controller

Note: Product specs are for general reference only and are subject to change without notice. Please check with us on the latest product specifications.

Key Power Specifications	
Battery voltage	Intended for equipment with 48V systems
Continuous motor line current with air flow[1]	180A RMS
Peak motor line current for 30 seconds[2]	350A RMS
Operating temperature limits	-10 degC to +80 degC

IO	Example Use Case
CAN H / CANL (1 qty)	CAN high/low isolated CAN lines.
Digital switches (10 qty)	These are 0-12V Among the 8 qty switches, 6 qty digital switches are referenced with 48V ground, while 2 qty switches are referenced with 12V ground. Example use cases are: (a) Forward switch (b) Reverse switch (c) Mode selection switch (d) Multi function switch (e) Gear switch (f) Clutch swith
Pulse train	12V pulse input, for example, to measure wheel speed
Ignition key (KSI)	Intended to be to be used to wake-up microcontroller
Throttle module (2 qty)	Each throttle module comprises of a 5V/150 mA power supply, a ground return signal, and the throttle signal input
Brake module (2 qty)	These are analog brake signal inputs. Supply of brake input is shared with the 2 qty of throttle modules.
NTC	Temperature dependent resistor input that can be used to measure motor winding temperature
LSD (2 qty)	2A / 12V low side drive. Example use case of the LSD is to drive motor fooling fan and/or controller cooling fan
HSD (2 qty)	2A / 12V high side drive. Example use case is to power brake lamp, reverse lamp etc.
Position sensor option	Either of below configurations will work: (a) Analog hall U, V, W interface. (b) Sin +, Sin -, Cos+, Cos- interface (c) ABZ or AB encoder interface for induction motors A 5V dedicated regulator is provided.

ISAAC 15K MV

Technical Specification

Length	275 mm
Width	232mm
Height	84 mm
Ingress Protection	IP 67

1. Airflow of 3.5 m/s considered
2. Line currents mentioned in "peak motor line current" specification assume that the controller is soaked in ambient temperature of 25 degC before application of peak motor line current.
3. External air cooling over the base plate is considered

Important Note: 12V and 72/96V network in the controller are isolated inside the controller. The 12V ground and 72/96V ground may or may not be shorted in the equipment outside the controller

Note: Product specs are for general reference only and are subject to change without notice. Please check with us on the latest product specifications.

Key Power Specifications	
Battery voltage	Intended for equipment with 72V or 96V systems
Continuous motor line current with air flow[1][3]	250A RMS
Peak motor line current for 2 minutes[2][3]	500A RMS with base plate + fins
Rated ambient temperature	25 degC

IO	Example Use Case
CAN H / CANL (2 qty)	CAN high/low isolated CAN lines. One of the lines is intended for actual vehicular application, while the second is intended for development purposes.
Digital switches (7 qty)	These are 0-12V digital switches. Example use cases are: (a) Interlock switch (b) Mode switch (c) Sports mode switch (d) Forward switch (e) Reverse switch
SWC / digital switch #7	SWC stands for "single wire communication" which can be used to communicate with HMI. Alternately, the pin can be configured as an additional digital switch.
Timer capture pin (4 qty)	Feedback, for example, motor fan, mcu fan, etc.
Ignition key (1 qty)	Intended to be to KSI
hrottle module (2 qty)	Each throttle module comprises of a 5V signal, a ground return signal, and the throttle signal input
Brake module (2 qty)	Each Brake module comprises the Brake signal input; Uses throttle module 5v signal input and ground return signal. These can be configured for analog brakes.
NTC (2 qty)	Temperature dependent resistor input that can be used to measure motor winding temperature
LSD (7 qty)	3 qty with 2A / 12V low side drive 4 qty with 0.5A / 12V low side drive
HSD (6 qty)	0.5A / 12V
Position sensor option	Analog hall U, V, W interface. Quadrature AB or ABZ encoder

ISAAC 15K LV

Technical Specification

Length	275 mm
Width	232mm
Height	84 mm
Ingress Protection	IP 67

1. Airflow of 3.5 m/s considered
2. Line currents mentioned in "peak motor line current" specification assume that the controller is soaked in ambient temperature of 25 degC before application of peak motor line current.
3. External air cooling over the base plate is considered

Important Note: 12V and 72/96V network in the controller are isolated inside the controller. The 12V ground and 72/96V ground may or may not be shorted in the equipment outside the controller

Note: Product specs are for general reference only and are subject to change without notice. Please check with us on the latest product specifications.

Key Power Specifications	
Battery voltage	Intended for equipment with 48V systems
Continuous motor line current with air flow(1)(3)	320A RMS
Peak motor line current for 2 minutes(2)(3)	650A RMS with base plate + fins
Rated ambient temperature	25 degC

IO	Example Use Case
CAN H / CANL (2 qty)	CAN high/low isolated CAN lines. One of the lines is intended for actual vehicular application, while the second is intended for development purposes.
Digital switches (7 qty)	These are 0-12V digital switches. Example use cases are: (a) Interlock switch (b) Mode switch (c) Sports mode switch (d) Forward switch (e) Reverse switch
Timer capture pin (4 qty)	Feedback, for example, motor fan, mcu fan, etc.
Ignition key (1 qty)	Intended to be to KSI
Throttle module (2 qty)	Each throttle module comprises of a 5V signal, a ground return signal, and the throttle signal input
Brake module (2 qty)	Each Brake module comprises the Brake signal input; Uses throttle module 5v signal input and ground return signal. These can be configured for analog brakes.
NTC (2 qty)	Temperature dependent resistor input that can be used to measure motor winding temperature
LSD (7 qty)	3 qty with 2A / 12V low side drive 4 qty with 0.5A / 12V low side drive
HSD (6 qty)	0.5A / 12V
Position sensor option	Analog hall U, V, W interface. Quadrature AB or ABZ encoder

ISAAC 25K

Technical Specification

Length	223 mm
Width	192 mm
Height	85 mm
Ingress Protection	IP 67

1. Airflow of 3.5 m/s considered
2. Line currents mentioned in "peak motor line current" specification assume that the controller is soaked in ambient temperature of 45 degC before application of peak motor line current.
3. External air cooling over the heatsink is considered in air-cooled variant

Important Note: 12V and 400V network in the controller are isolated inside the controller.

Note: Product specs are for general reference only and are subject to change without notice. Please check with us on the latest product specifications.

Key Power Specifications	
Battery voltage	Intended for equipment with 400V systems
Continuous motor line current with air flow(1)(3)	50A RMS
Peak motor line current for 30 seconds (1)(2)(3)	130A RMS
Rated ambient temperature	45 degC

IO	Example Use Case
CAN H / CAN L (1 qty)	CAN high/low lines
Ignition key (1 qty)	Wake-up / sleep line
Digital switches (6 Qty)	These are 0-12V digital switches. Example use cases are: (a) Kill switch (b) Drive mode switch (c) Park mode switch (d) Cruise control switch (e) Side stand switch
Throttle input	Dual throttle input, with separate 5V supply
LSD (2 qty)	1A / 12V low side drive (1 ON/OFF, 1 PWM)
12V supply input	12V supply for powering logic section of the controller
Position sensor option	(a) Resolver Resolver (b) Analog U, V, W encoder. (c) Analog sin / cos encoder
Motor temperature sensor (1 Qty)	Motor NTC input

ISAAC 350 Base

Technical Specification

Length	82 mm
Width	49 mm
Height	29 mm
Ingress Protection	IP 67

1. Line currents mentioned in "peak motor line current" specification assume that the controller is soaked in ambient temperature of 45 degC before application of peak motor line current
2. Hall sensor inputs are not required with SEDEMAC Sensorless Control

Key Power Specifications	
Operating voltage range	25V to 42V 36V rated voltage
Continuous motor line current	15A RMS for high power config 10A RMS for standard config
Peak motor line current for 60 seconds[1]	35A RMS for high power config 30A RMS for standard config
Rated ambient temperature	45 degC

IO	Example Use Case
5V Sensor Supply	Supply to external sensor assemblies and (optionally) hall sensors
Throttle input	0-5V signal
PAS sensor interface	0-5V signal pulse input
Brake input	0-5V signal
Motor temperature sense	NTC/PTC resistor input
Key switch input	Wake-up / sleep line
Headlamp control	6V / 300 mA high side drive
Taillamp control	(optional) 6V / 300 mA high side drive
CAN H	(optional) CAN high line (non-isolated)
CAN L	(optional) CAN low line (non-isolated)
UART RX	HMI communication
UART TX	HMI communication
Hall A, B, C	(Optional) Hall sensor input for position sensing[2]

Note: Product specs are for general reference only and are subject to change without notice. Please check with us on the latest product specifications.

ISAAC 350 Advanced

Technical Specification

Length	92 mm
Width	42 mm
Height	43 mm
Ingress Protection	IP 67

1. Airflow of 3.5 m/s considered
2. Line currents mentioned in "peak motor line current" specification assume that the controller is soaked in ambient temperature of 45 degC before application of peak motor line current.

Important Note: 12V and 400V network in the controller are isolated inside the controller.

Note: Product specs are for general reference only and are subject to change without notice. Please check with us on the latest product specifications.

Key Power Specifications	
Operating oltage range	25V to 42V 36V rated voltage
Continuous motor line current	15A RMS for high power config 10A RMS for standard config
Peak motor line current for 60 seconds[1]	35A RMS for high power config 30A RMS for standard config
Rated ambient temperature	45 degC

IO	Example Use Case
5V Sensor Supply	Supply to external sensor assemblies and (optionally) hall sensors
Throttle input	0-5V signal
PAS sensor interface (2 qty)	0-5V signal pulse input
Wheel speed input	0-5V signal pulse input
Torque sensor input	0-12V input
Brake input	0-5V signal
Motor temperature sense	NTC/PTC resistor input
Key switch input	Wake-up / sleep line
Headlamp control	6V-15V variable / 9W at 12V output
Taillamp control	6V-15V variable / 4W at 12V output
Spare output	6V-15V variable / 4W at 12V output
Spare output	6V-15V variable / 4W at 12V output
CAN H	CAN high line (non-isolated)
CAN L	CAN low line (non-isolated)
Hall A, B, C	(optional) Hall sensor input for position sensing[2]
Spare analog input	Secondary brake input
9-axis IMU	The controller has provision to accommodate 9-axis IMU to enable features such as crash detection, boost-during-hill-climb etc.

ISAAC Product Line:
Feature List

- Sensorless control: SEDEMAC's flagship offering offered with ISAAC 350, ISAAC 1200, ISAAC 1500 and ISAAC 3500
- Comprehensive provision for customer to write application software (such as vehicular logics) in Model Based Development workflow with base software package and motor control software provided by SEDEMAC
- Field oriented control with saddle PWM (i.e., sinusoidal waveforms at line-to-line level with high modulation index).
- Full 4-quadrant operation, which enables optimal regenerative breaking with negative torque control and reverse assist
- Battery current limitation
- Different control modes, such as torque control mode, speed control mode, voltage regulation mode
- Derating functionality as a function of battery voltage, motor temperature, motor currents, logic etc.
- Rotor flux estimation resulting in magnet strength estimation and diagnostics
- Configurable torque and power limits as a function of motor speed and operating modes, which can enable features such as different assist levels.
- In case of with-sensor control, provision for automatic calibration of the position sensor offsets and motor parameters
- Efficient field weakening logic, that enables higher power extraction at high speeds
- Calibration over CCP
- Diagnostics over UDS / OBD
- Temperature estimator of individual components of controller, such as MOSFETs, capacitors etc. based on a thermal RC model of controller running in real time
- Motor component temperature estimators (stator yolk / winding / magnets etc.) based on thermal RC model of motor running in real time
- Various fault diagnostics, such as line to ground fault, over voltage fault, over temperature fault, over current fault, lock rotor fault etc.

Stark S

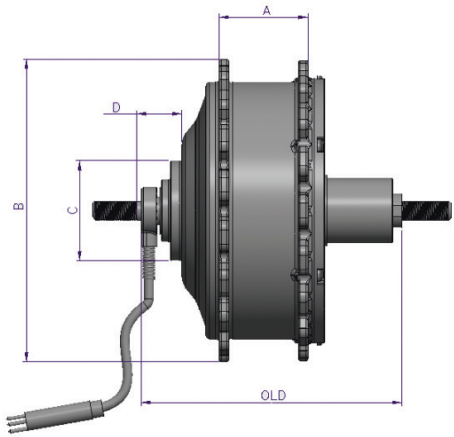

Technical Specification

Battery voltage	36 V
Continuous torque / power	12 Nm / 250 W
Peak Torque / Peak Power	45 Nm / 400 W
Weight	~3.8 kg
Max motor speed	220 RPM

Dimension A	47 mm
Dimension B	160.5 mm
Dimension C	53 mm
Dimension D	23.3 mm
Dimension OLD	138 mm

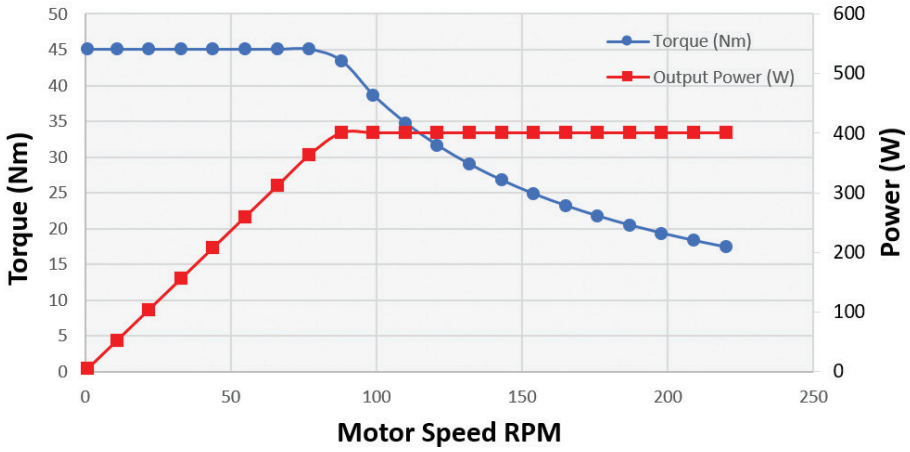

Logan 2000

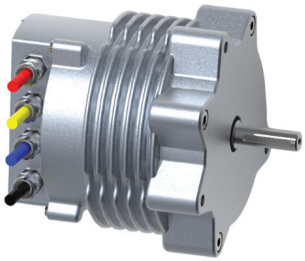

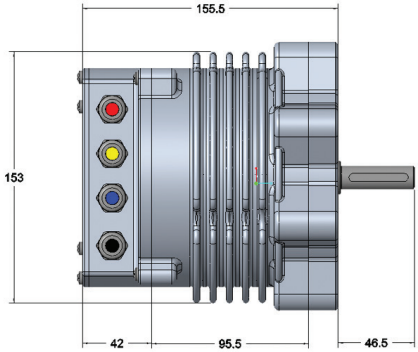

Technical Specification

Battery voltage	52 V
Continuous torque / power	6 Nm / 2 kW
Peak Torque / Peak Power	16 Nm / 3 kW
Weight	~6.5 kg
Max motor speed	7500 RPM
S2-1 min torque	16 Nm
S2-2 min torque	12 Nm
S2-30 min torque	6 Nm

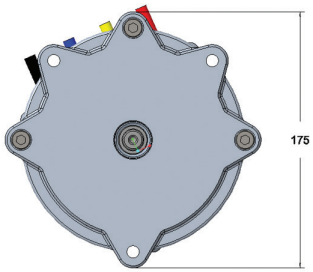

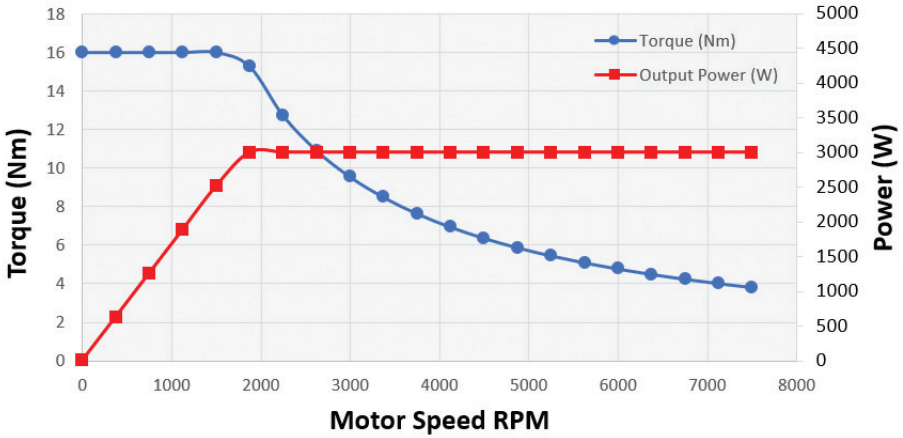

Logan 3500

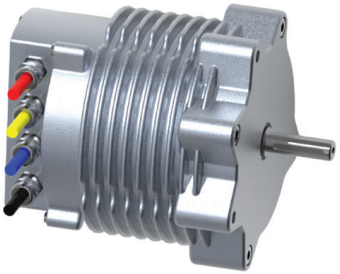

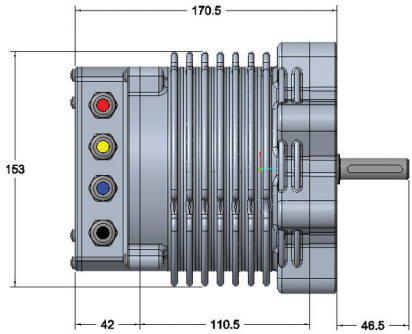

Technical Specification

Battery voltage	52 V
Continuous torque / power	8 Nm / 3 kW
Peak Torque / Peak Power	22 Nm / 5.5 kW
Weight	~7.5 kg
Max motor speed	7500 RPM
S2-1 min torque	22 Nm
S2-2 min torque	17 Nm
S2-30 min torque	8 Nm

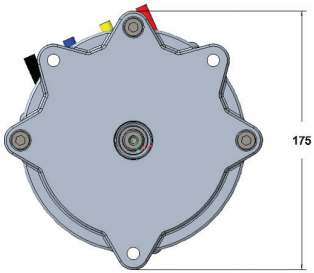

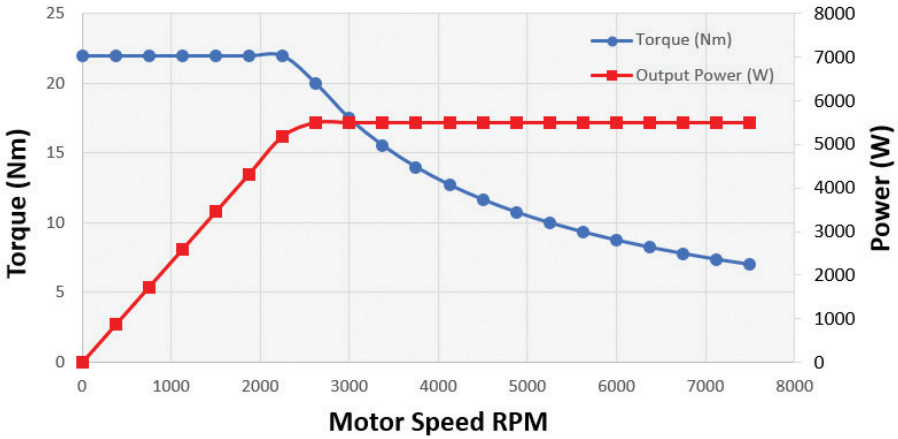

Sensorless Integrated Starter Generators

Technical Specification

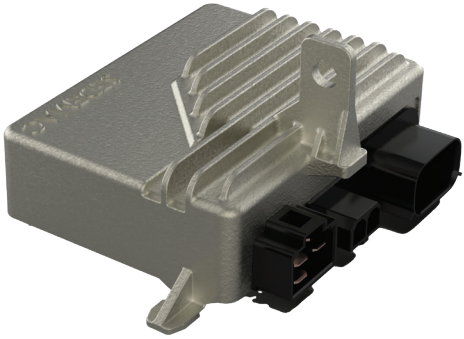

ISG eliminates the starter motor system, enabling delightful, silent & reliable starts.The technology also enables reliable idle start-stop offerings by OEMs manufacturers without concerns of starter motor reliability.

- Uses our sensorless commutation technology i.e., no hall effect sensors used in magnetos → benefits of ISG to all equiped even with a wet magnetos.
- We currently supply controllers. Will shortly offer supply of magnetos.
- Optional integration of ISG Electronics with EFI ECU electronics.

Note: Product specs are for general reference only and are subject to change without notice. Please check with us on the latest product specifications.

Fuel Injection ECUs for Large Engines Gas Powered Equipment

Technical Specification

Engine mounted, **IP67 rated** FI ECUs capable of **controlling (upto) 8 cylinder** engines with interface to set of standard inputs and outputs part of **stationary generators**.

- Custom ECU model with production intended CE certified hardware and model based software development framework that enables customers to develop, control and own their application code.
- Capability to interface throttle by wire through stepper / DC motors besides option to monitor loads through current transducers and mixer motor for Gas (NG) engines.
- 8 cylinder Large Spark Ignited (LSI) FI controller products
- 1 or 2 cylinder Small Spark Ignited (SSI) FI controller products

Note: Product specs are for general reference only and are subject to change without notice. Please check with us on the latest product specifications.

Fuel Injection ECUs for Small Engines Petrol/Gasoline Equipment

Technical Specification

Implements the necessary hardware and software logics to enable **control of 1 or 2 cylinder** electronic fuel injected engines towards meeting legislative **emission requirements** while ensuring **excellent engine performance** under wide operating conditions.

- Strategies to meet emission norms requirements.
- Works with a wide range of makes of other EFI system components such as injector, fuel pump, oxygen sensor and TMAP sensor. Supports without battery starts.
- Optional integration of ISG Electronics with EFI ECU electronics.
- Option to integrate OEM-specific custom logics such as those for idling stop.
- Option to eliminate Trottle Position Sensor

Note: Product specs are for general reference only and are subject to change without notice. Please check with us on the latest product specifications.

ISG + EFI
Technical Specification

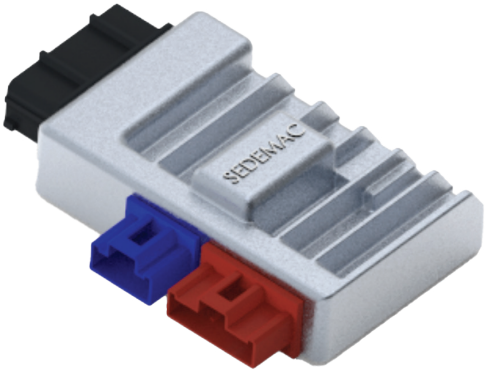

EFI and ISG are two critical control technologies for ICE powered equipment. While these technologies have led to cleaner/greener equipment and user delight, their introduction has also led to increased costs seen by OEMs and therefore end-users. One such substantial cost-saving idea is the integration of the electronics used for ISG with that used for EFI thereby reducing duplication of components.

SEDEMAC Mechatronics Limited

(Formerly SEDEMAC Mechatronics Private Limited)

Technical Center & Corporate Office: Survey No. 270/1/A/2,
Pollod Farms, Baner Road, Pune, 411045, India. Tel: +91 20 67157200

Mfg Facility I: G-1, MIDC, Phase- III, Chakan Industrial Area, Nighoje,
Maharashtra 410501 Tel: +91 2135 623 200

Mfg Facility II: Survey No.64/5, Bhide Baug Industrial Estate, Off Sinhagad Rd,
Behind Suwasini Mangal Karyalaya, Near Trimurthi Hospital,
Vadgaon Budrak Rd, Wadgaon Budruk, Narhe, Pune, Maharashtra 411041

Registered Office: 211, 2nd Floor, Bldg. No. 1, Sona Udyog Ind. Estate,
Parsi Panchayat Road, Andheri East, Mumbai 400069, India.

e-mail: sales@sedemac.com | Website: www.sedemac.com | CIN: U29253MH2007PLC172479