ANIMESH DONIKAR OSRE/INT/0421/158

FACILITIES REQUIRED TO CONDUCT SMALL SCALE ROCKET ENGINE TESTING

REPORT 2 VERSION 3

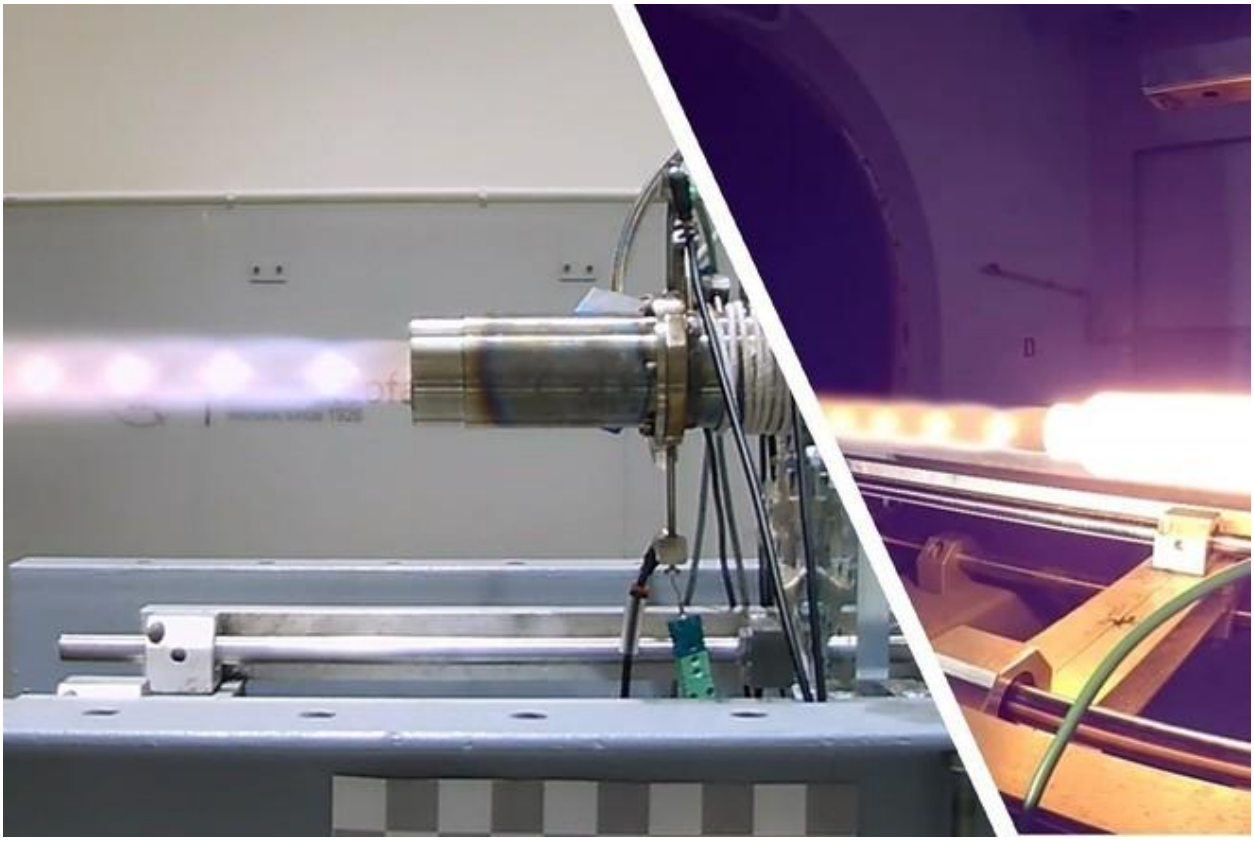

Index

- INTRODUCTION
- PRINCIPLE AT WHICH ELECTRIC PUMP WORKS
- WORKING OF ELECTRIC PUMP ENGINE
- FUNCTIONS OF ELECTRIC PUMP ENGINE
- DIAGRAMS AND CHARTS
- ADVANTAGES AND DISADVANTAGES
- FACILITIES USED IN ROCKET ENGINE TESTING
- COMPONENTS USED IN TESTING FACILITY
- TEST STAND ASSEMBLY
- STORAGE TANKS
- TUBING AND FITTING
- CONTROLS AND DATA ACQUISITIONS
- CONCLUSION
- REFERENCE

INTRODUCTION

Rocket engine testing requires a number of different systems to work efficiently. The facility at which the testing is done is made purely based on the requirements of the test. The testing facility is made in such a way that it does the job fluently and effectively. The instruments used in the testing are very specifically chosen by the developers in order to maintain the proper outputs. The testing is generally done at a facility which is located where rocket engines may be tested on the ground, under controlled conditions. The report will cover testing facilities in small scale rocket engine testing. The testing for liquid rocket engines is done in a different way as fuel and oxidiser are required to be placed in different tanks. They require more precautions as the propellant and oxidizer (liquid oxygen, etc) could be harmful to the apparatus as well as to electric components. Even though liquid propellant engines need different testing components which are expensive and could be harmful, it provides an overall better performance as compared to solid propellants. Liquid rocket engines or LRE have the ability to control the direction and the amount of fuel being used, increasing the maneuverability and specific impulse of the rocket. This report will cover the facility required to test a small liquid rocket engine.

THE TESTING FACILITY

The floor plan of the facility permits isolation of the propellant feed system from the test engine and this eliminates a cascading failure case from destroying the entire test apparatus. That is ideal for testing engine designs and propellant combinations where failure may be a common occurrence. The installed rocket engine mounting hardware should be capable of supporting test firing of rocket engines of up to a high number of thrust. The facility should consist of reinforced concrete walls. One side being a blowout wall designed to fail under over-pressure conditions. That allows any energetic event that may occur inside of the fuel galley to be directed away from the facility, thereby limiting damage to personal and hardware.

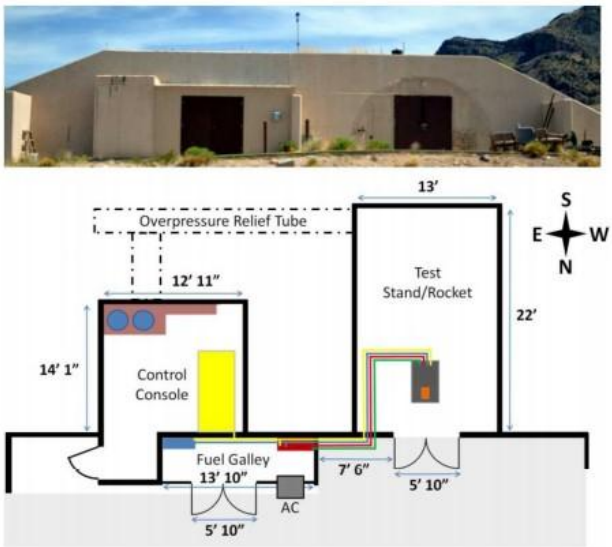

Fig 1. Rocket Engine facility (REF) at Sandia National Laboratories and NMIMT

COMPONENTS USED IN TESTING

The components used in testing comprises a testing table, storage tanks, tubing and piping, valves, control systems and other precaution systems. The testing is basically done one the basis of requirements i.e if liquid propellants is being tested, tubing, storage tanks and valves will be prioritized over other things as they will help the system to run the test without leaks which could cause hazards. The facility systems are discussed in detail below. The frame is attached to the testing engine, which is placed vertically on the base. The storage tanks and the instruments are attached to the engine by tubing and piping. The valves and thermocouples are attached to the wireframe and pipes between tanks and the testing engine. The electronics system is laid attaching the test engine and the parameters that have to be calculated. A software is used to evaluate the findings of the test. LabVIEW is one of the most used softwares that is being used for testings like these. The specific impulse, thrust and fuel ratio can be calculated using the software. Even though the parameters like fuel used and stress on the system cannot be calculated and scaled to a large scale testing.

THE TESTING STAND ASSEMBLY

The testing stand assembly comprises a frame, which can be stationary or mobile, depending on the test being conducted. It's made in such a way that any (or most) of the motor types could fit in the bench. It sometimes has rails to fit the cylinders and frames to support the liquid propellants and oxidizers. The example given below has been made completely out of reinforced frame metal and with supporting rails and frames, it is a movable small scale testing assembly stand or bench. If the right materials are available, large parts of the assembly could be 3D printed as well. The testing assembly is the main portion of the facility, it is where its engine along with all the components is to be mounted. For a small scale testing. The frame can be made in a CAD softwares along with the frame stress analysis and the components it'll be attached to. A material can be given to the model in order to make the analysis. The frame is placed on the ground in the facility. A calibrating mechanism can be attached to the frame if the engine is to be mounted vertically. In that case, the engine is placed well above the ground. It must stand the heat and stress that will be applied to it during the testing.

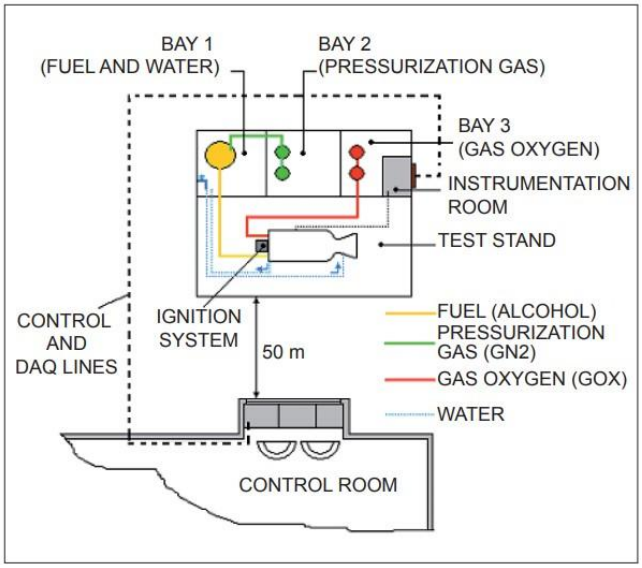

Fig 2. Engine testing facility layout example.

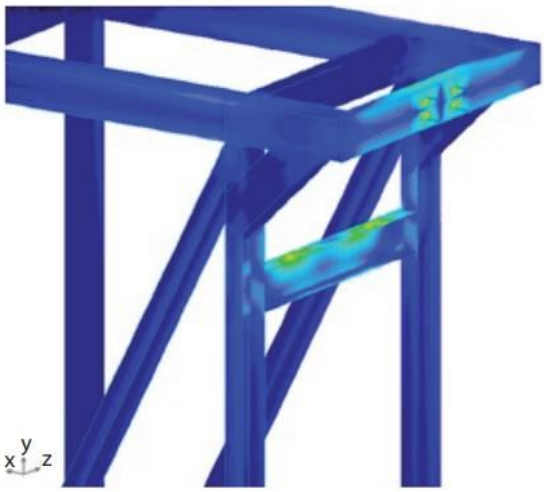

Fig 3. Engine testing frame model for stress analysis

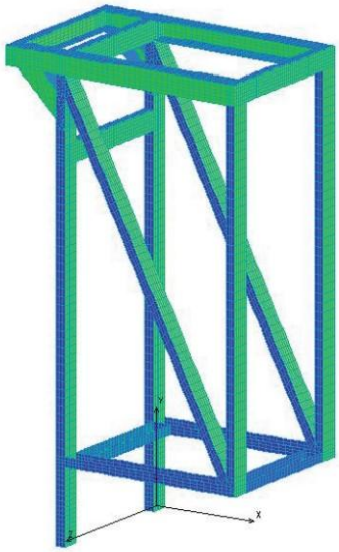

Fig 4. Engine testing frame mesh model

Fig 5. Rocket Engine testing frame along with other components made by University of Akron's first design team

Fig 6. Rocket Engine testing base with movable cart made by University of Akron's first design team

STORAGE TANKS USED

The design of fuel and oxidizer tanks is important to ensure that they

can hold the proper amounts of liquids and can withstand the pressure from these propellants. The choice of the propellants is made based on requirements for low cost, ease of acquisition, and non toxicity. Since the propellant is stored inside, the tanks are made on the basis of what propellant will be used in the testing. Both the oxidizer and fuel tanks have a similar external design, with slightly different input and output ports on their caps. Filling of the test system with propellants can be handled remotely to minimize operator exposure. Remotely operated pumps are used to transfer the ethanol and nitrous oxide (fuel and propellant) into their respective tanks. The storage system can also be kept attached to the bench if the test is small enough. In the average size testings, they are mounted on load cells allowing the mass loaded into the run tanks to be determined remotely. The igniter is located on the rocket engine. The fuel and oxidizer are injected into the propellant manifold section from the front and back sides of the engine in the image, respectively.

Fig 7. Installed Propellant tank panel

FEED SYSTEM

The feed system is composed of piping lines, a series of valves, provisions for filling and removing (draining and flushing) the liquid propellants, and control devices to initiate, stop, and regulate their flow and operation. It can be a separate

component or it can be installed on the frame itself (if the test is small enough). The feed system for a liquid propellant engine needs to be managed with precautions as the propellant and oxidiser might leak and damage other components. The tanks have a pressure regulator attached, which then works as the regulator is moved in desired position. The feed system also comprises temperature, pressure and thrust measurement components.

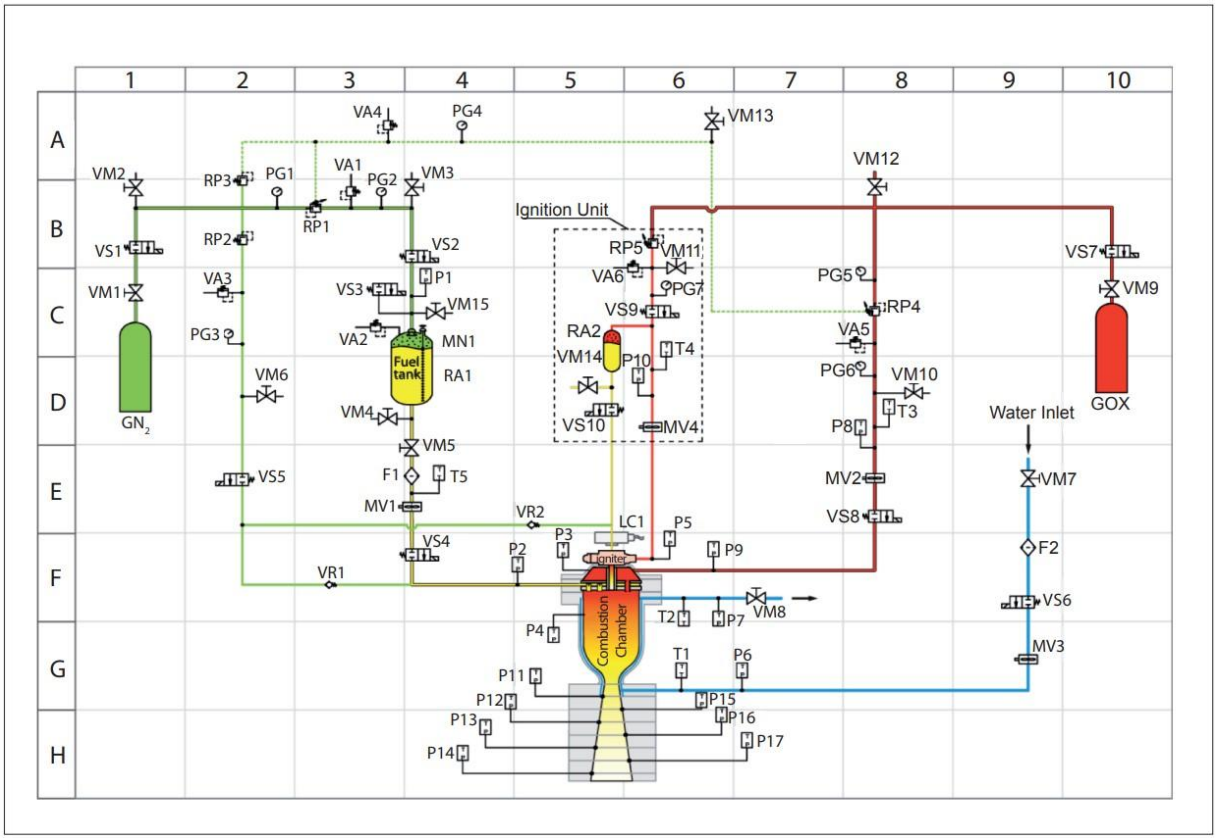

Fig 8. Feed system in the engine testing RP(n): pressure regulator (n=1,2,3,4,5), T(n): thermocouple (n=1,2,3,4,5), VA(n): relief valve (n=1,2,3,4,5,6), VM(n): manual valve (n=1,2,3,...,14), VS(n): solenoid valve (n = 1,2,3,...,10), MV(n): flowmeter (n=1,2,3,4).

PROPELLANT SUPPLY AND TUBING

A constant pressure system can be used for supplying propellants to the rocket engine, or direct supply can be done if the system is small enough. The constant pressure system uses nitrogen gas to push

propellant from storage tanks through feed lines to the rocket engine. Liquid propellants are supplied to the engine from bottom tank outlets while maintaining the tank pressures above the saturation pressure of the propellant. Rigid or flexible pipes or both can be used in the testing.

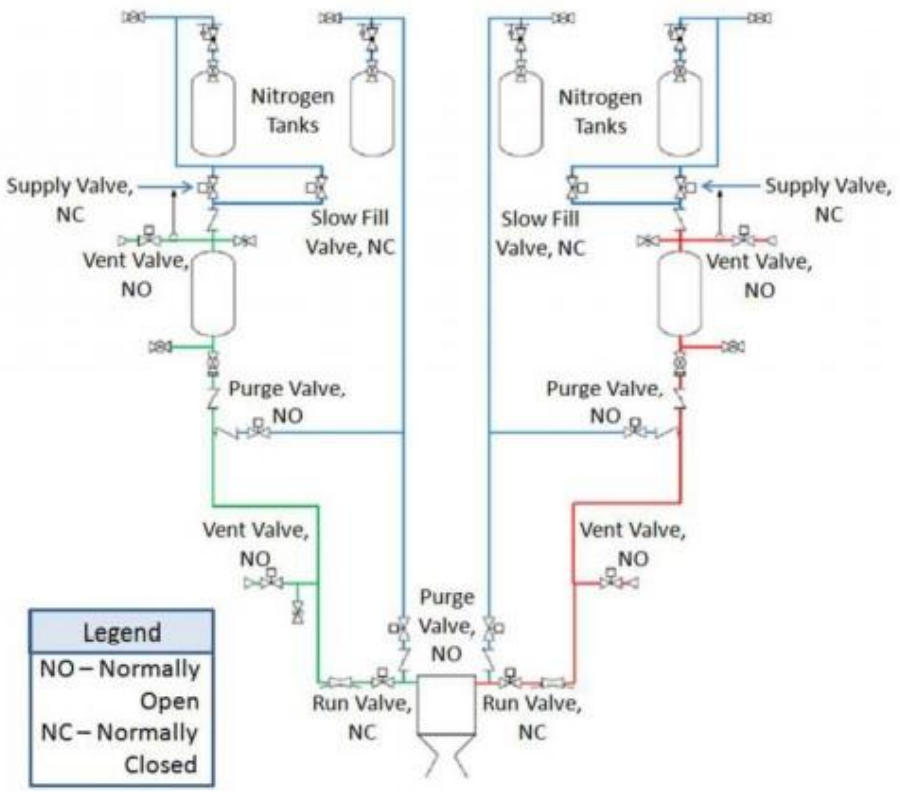

Fig 9. Simplified schematic of propellant supply system detailing valve function and operation

EXAMPLE OF A SUPPLY PANEL

Fig 10. Installed nitrogen supply pane

CONTROLS AND DATA ACQUISITION

Control system is important for data acquisition. Several softwares are used for the testing, some being NI's LabVIEW, companies like Meggitt, Aece, Erneo and Safran make the real-time simulation softwares required for the engine testing. System pressure is monitored with data being taken every second, temperature measurement is also done using other device on the same software. The LabVIEW software displays system pressures and temperatures and permits variable and automated timed valve actuation for rocket engine operation as well as manual override control of individual valves while providing real-time data acquisition.

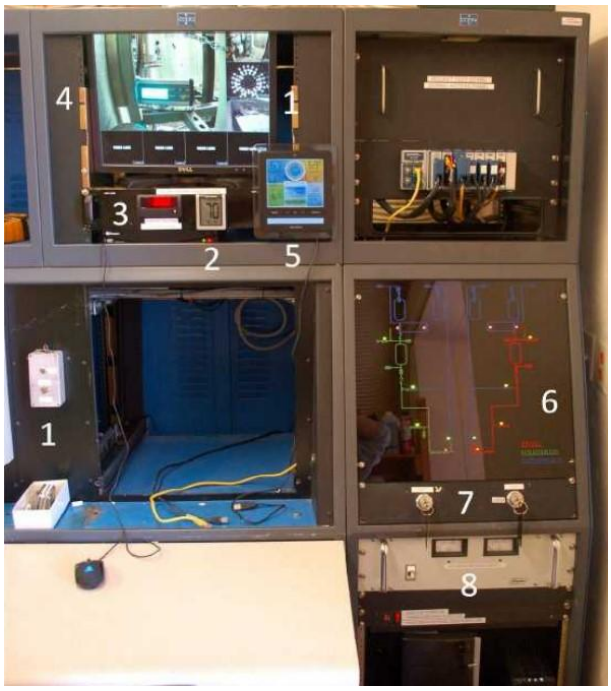

Fig 11.
Console for operations and site monitoring. Visible are:
Deadman's switch (1);

Fuel galley temperature monitoring(2);

Igniter supply voltage (3);

Video observation system (4);

Weather station (5);

Valve status indicator panel (6);

Propellant loading controls (7);

System power(8)

SYSTEM DATA ACQUISITION

In the figure below (1) is a controller system for temperature data, (2) is the temperature peripheral module, (3) is a controller for other data acquisition and control and (4) is the pressure regulator. The interface with user or human-machine interface (HMI) is carried out by means of a personal computer connected by ethernet and software. The

control is carried out through the opening and closing of the solenoid valves.

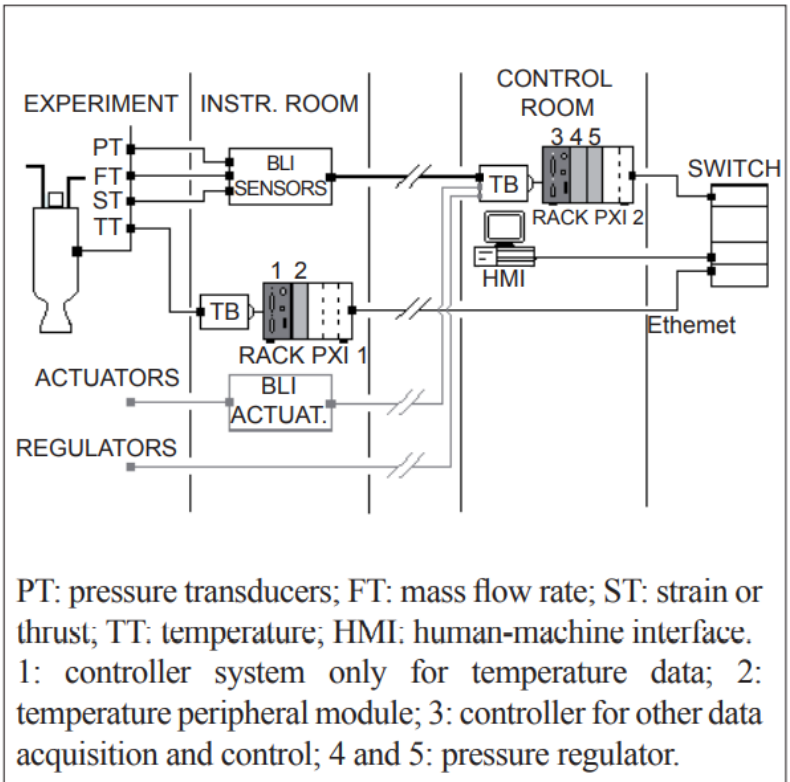

PT: pressure transducers; FT: mass flow rate; ST: strain or thrust; TT: temperature; HMI: human-machine interface. 1: controller system only for temperature data; 2: temperature peripheral module; 3: controller for other data acquisition and control; 4 and 5: pressure regulator.

Fig 12. Data acquisition system architecture

INSTALLED TESTING WITH CONNECTIONS

Fig 13. Installed small scale test engine with connections

CONCLUSION

Rocket engine testing is essential to evaluate the parameters such as efficiency and specific impulse of the rocket. It can be done at a small or a larger scale. Small scale testing is more cost friendly and less harmful, whereas some parameters can be evaluated by large scale testing only. The testing facility we saw was purely based on small scale testing. It is done at a confined space with the lab being isolated in an area to avoid issues to the nearby places. All the major equipment in the testing at a small scale facility has been discussed in the report.

REFERENCES

- W. Venner Saul (5439), Mark C. Grubelich (6916), Michael J. Hargather (New Mexico Institute of Mining and Technology). LDRD PROJECT NUMBER: 176311
- https://en.wikipedia.org/wiki/Rocket_engine_test_facility

- https://www.kistler.com/en/solutions/research-and-development-testing/space-testing/rocket-engine-testing/
- Air Force Research Laboratory (AFMC) AFRL/RZSA 10 E. Saturn Blvd. Edwards AFB CA 93524-7680 M.D.A. Lightfoot, S.A. Danczyk (AFRL/RZSA),, J.M. Watts (Orbital Sciences), and 5d. PROJECT NUMBER S.A. Schumaker (AFRL/RZSA)
- Large-Scale Hybrid Motor Testing George Story NASA, MSFC, A1
- https://www1.grc.nasa.gov/historic-facilities/rocket-engine-test-facility/conducting-a-test/
- https://www.nts.com/ntsblog/propulsion-testing/
- https://www.sciencedirect.com/topics/engineering/rocket-engines
- Liquid Rocket Engine and Test System ,Final Report for 4600:402-461/4600:402-497 Senior/Honors Design