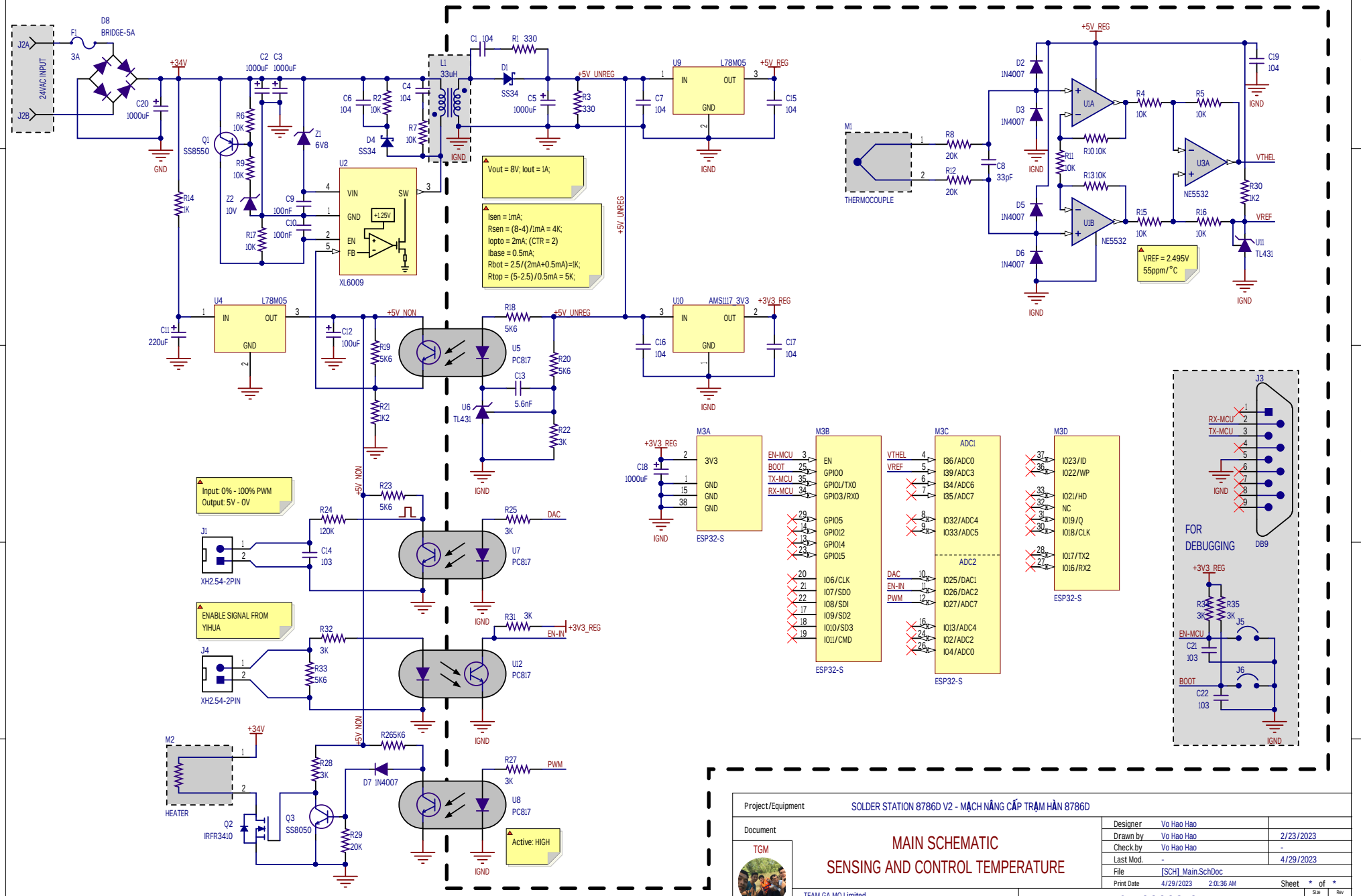

Project/Equipment	SOLDER STATION 8786D V2 - MẠCH NÂNG CẤP TRẠM HÀN 8786D		
Document	MAIN SCHEMATIC SENSING AND CONTROL TEMPERATURE	Designer	Vo Hao Hao
TGM		Drawn by	Vo Hao Hao 2/23/2023
		Check.by	Vo Hao Hao -
		Last Mod.	- 4/29/2023
		File	[SCH] Main.SchDoc
		Print Date	4/29/2023 2:01:36 AM Sheet * of *
TEAM GA MO Limited 30, Nhat Hamet, Thanh Hoa, Phung Hiep, HG	TGA-00008-01-1	Size A4	Rev *