The Data Science Identity Crisis

Decoding the modern data ecosystem: Engineer vs. Analyst vs. Scientist vs. ML Engineer.

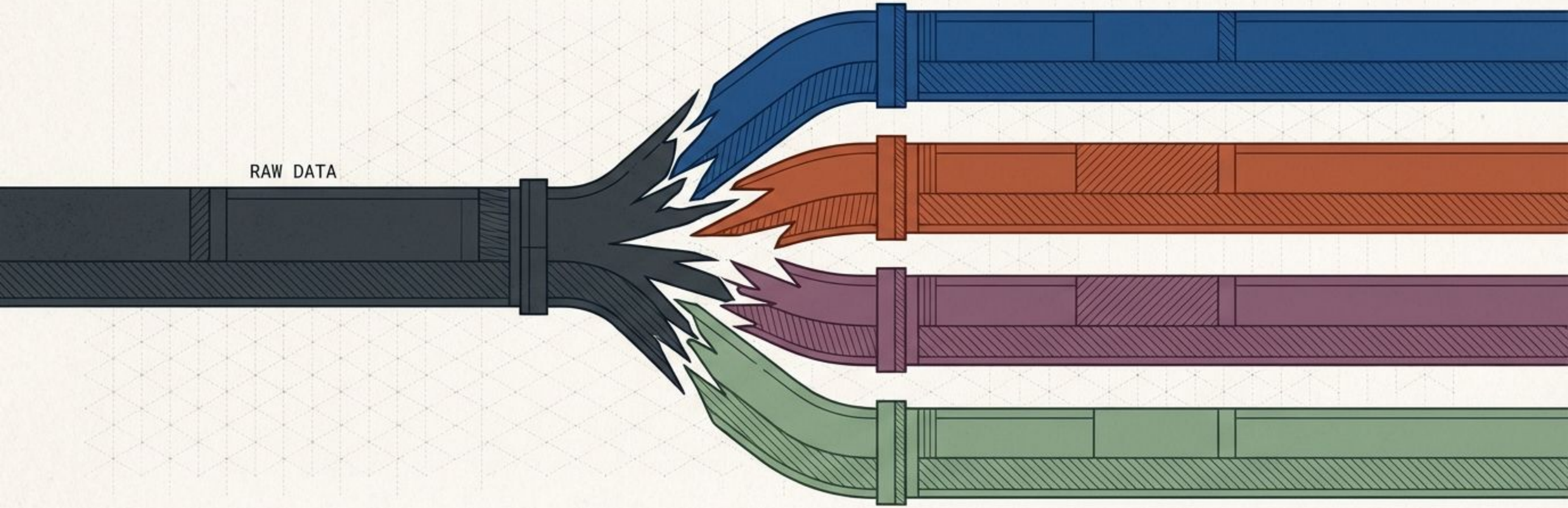

Anish_Das_2026

A chaotic market with overlapping labels

You cannot simply study ‘data science’ and apply blindly. While the titles overlap in job portals, the daily reality, required tech stacks, and core responsibilities of these four roles do not.

The Noise

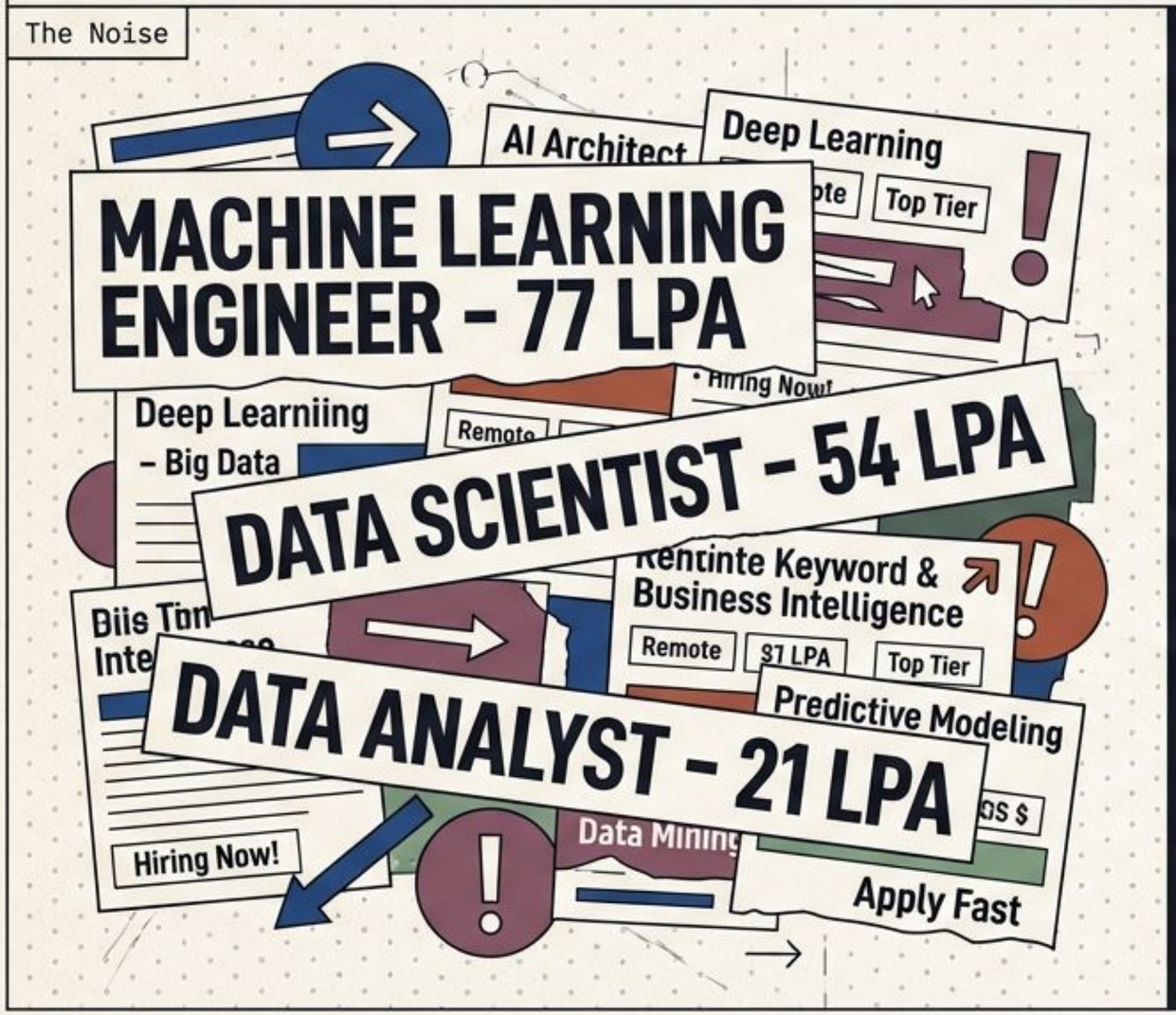

The Reality

Anish_Das_2026

The catalyst for specialization: Enterprise Scale

The Machine Learning Development Life Cycle

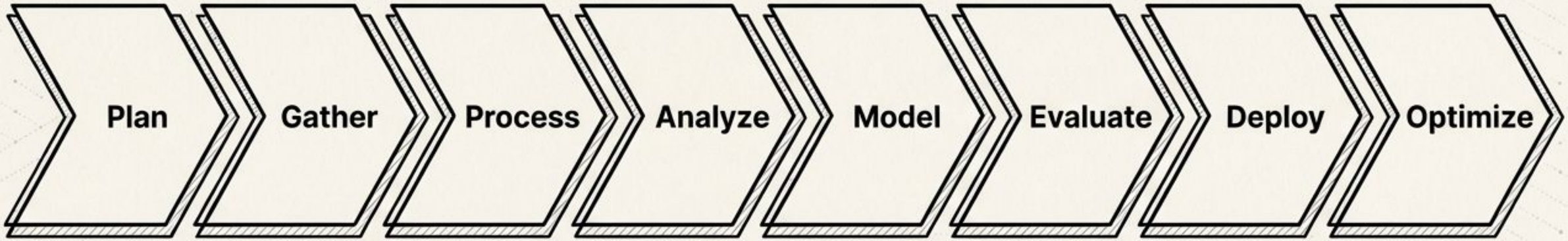

The Mythical Full-Stack Data Professional: In small startups, one person might attempt this entire cycle. At enterprise scale, the volume of data makes tlis impossible. The pipeline must be divided.

Anish_Das_2026

Mapping job titles to the production pipeline

Four roles. One continuous assembly line.

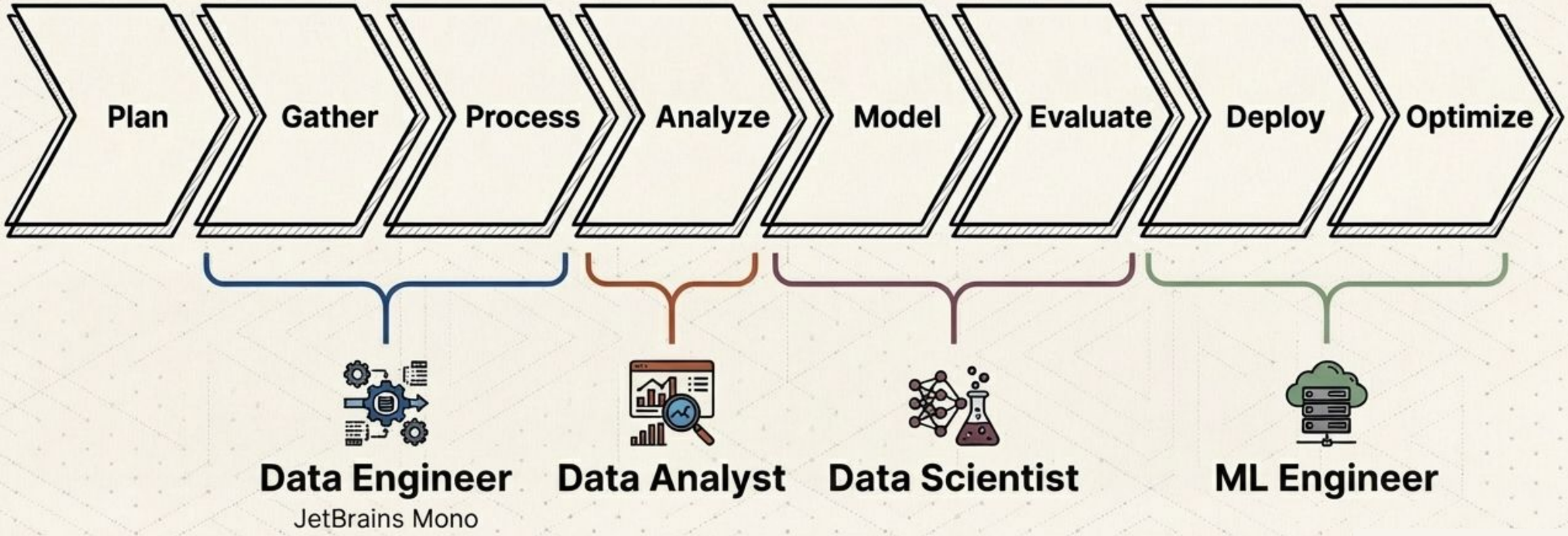

Anish_Das_2026

The Data Engineer: The Builder

Core Mandate: Data isn't magically available. The Engineer extracts, cleans, and formats raw data so the rest of the team can use it.

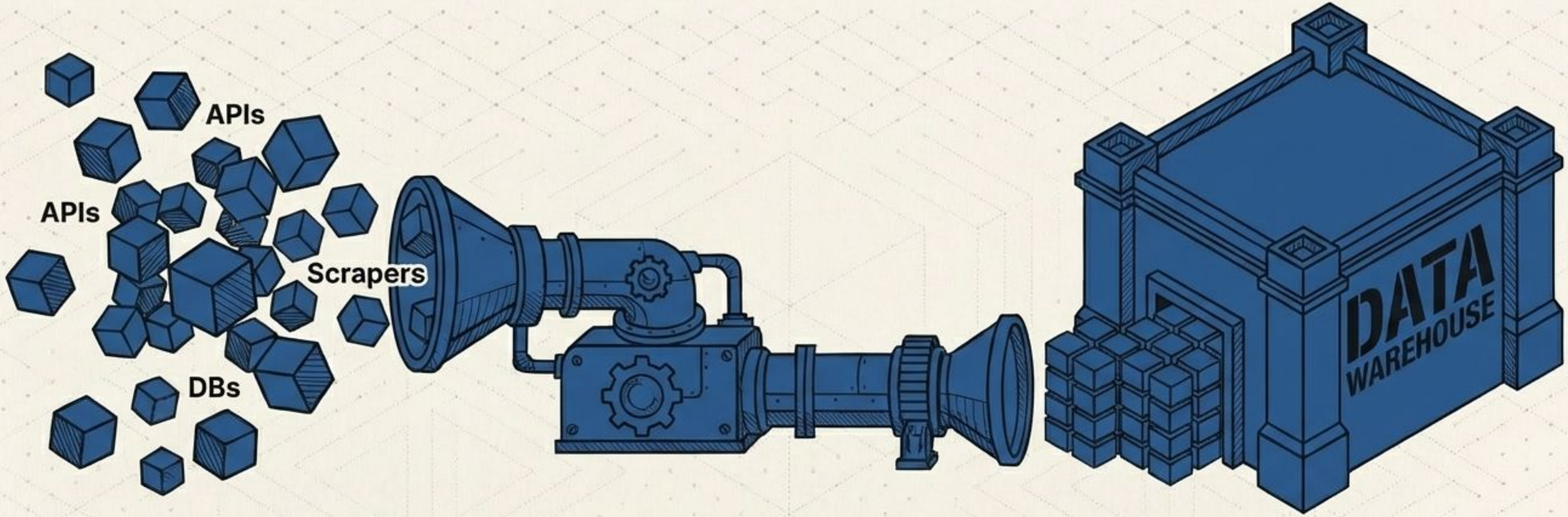

TECH STACK:	SQL, Apache Spark, Hadoop, Hive, AWS/GCP, Distributed Systems

Anish_Das_2026

Why Data Engineering is a high-stakes infrastructure game

If data scientists ran heavy ML queries directly on the live database (OLTP), the live app would crash. Engineers build a secure, offline replica (OLAP) to make analytics safe.

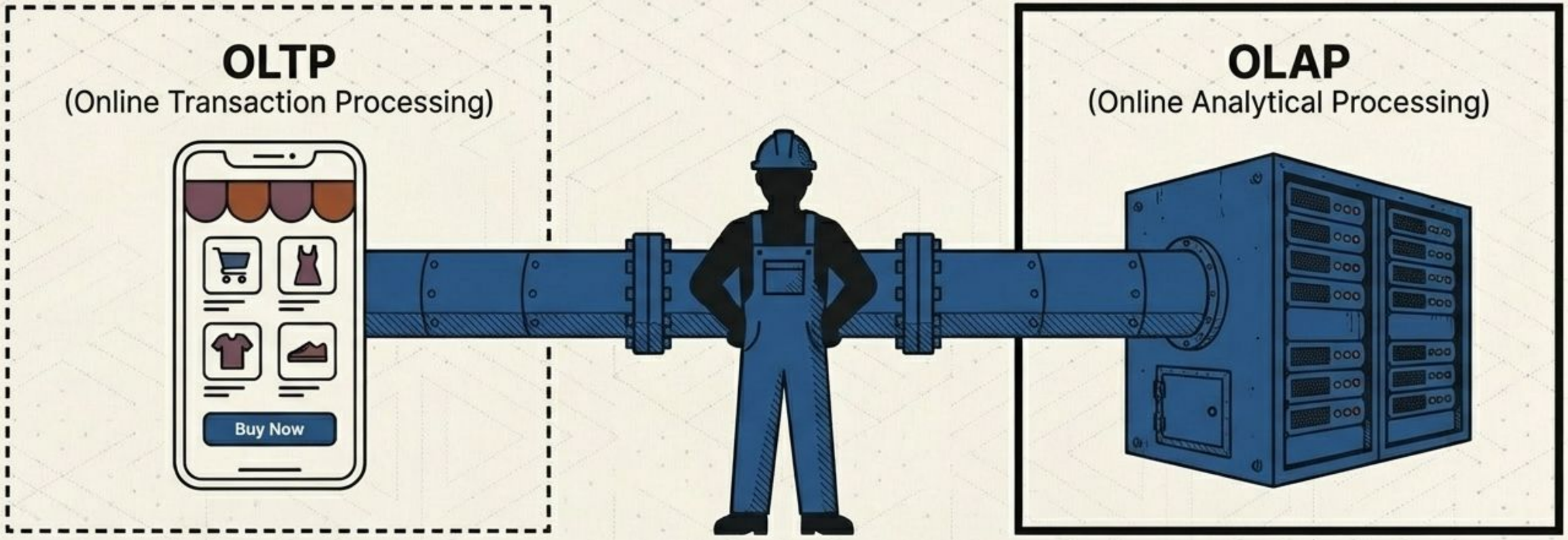

Fast, fragile, live user data.

The Data Warehouse.
Heavy querying allowed.

Anish_Das_2026

The Data Analyst: The Translator

Core Mandate

Making sense of the past. They run analytics on historical data to extract insights, utilizing the vital art of data storytelling to present findings to management.

TECH STACK
Advanced Excel, SQL, Python/R, BI Tools, Statistics

Anish_Das_2026

The Data Scientist: The Oracle

Core Mandate: Predicting the future. They utilize deep statistical knowledge to build algorithms that answer what will happen next. Better at software engineering than a statistician, and better at statistics than a software engineer.

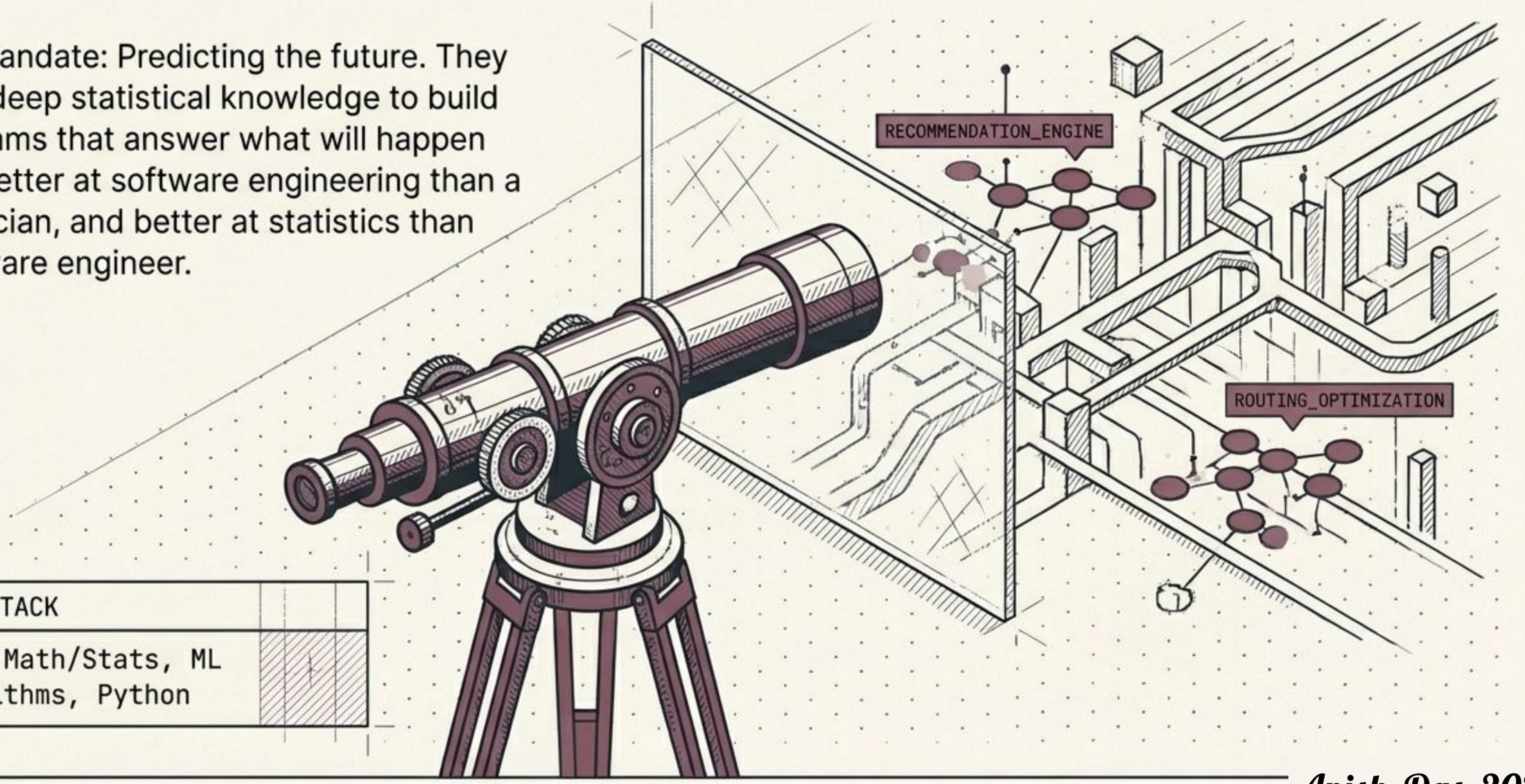

TECH STACK
Heavy Math/Stats, ML Algorithms, Python

Anish_Das_2026

The vital distinction: Past vs. Future

Analysts summarize historical data to inform human decisions. Scientists model data to automate future system behaviors.

The Data Analyst

Key Question Box

Why did sales drop last year?

Output Box

Dashboards & Reports

The Data Scientist

Key Question Box

What will this user buy next?

Output Box

Predictive Models & Engines

Anish_Das_2026

The ML Engineer: The Bridge

Core Mandate: Data Scientists rarely write production-grade software; Software Developers don't understand ML algorithms. The ML Engineer scales the trained model to handle millions of live requests without breaking.

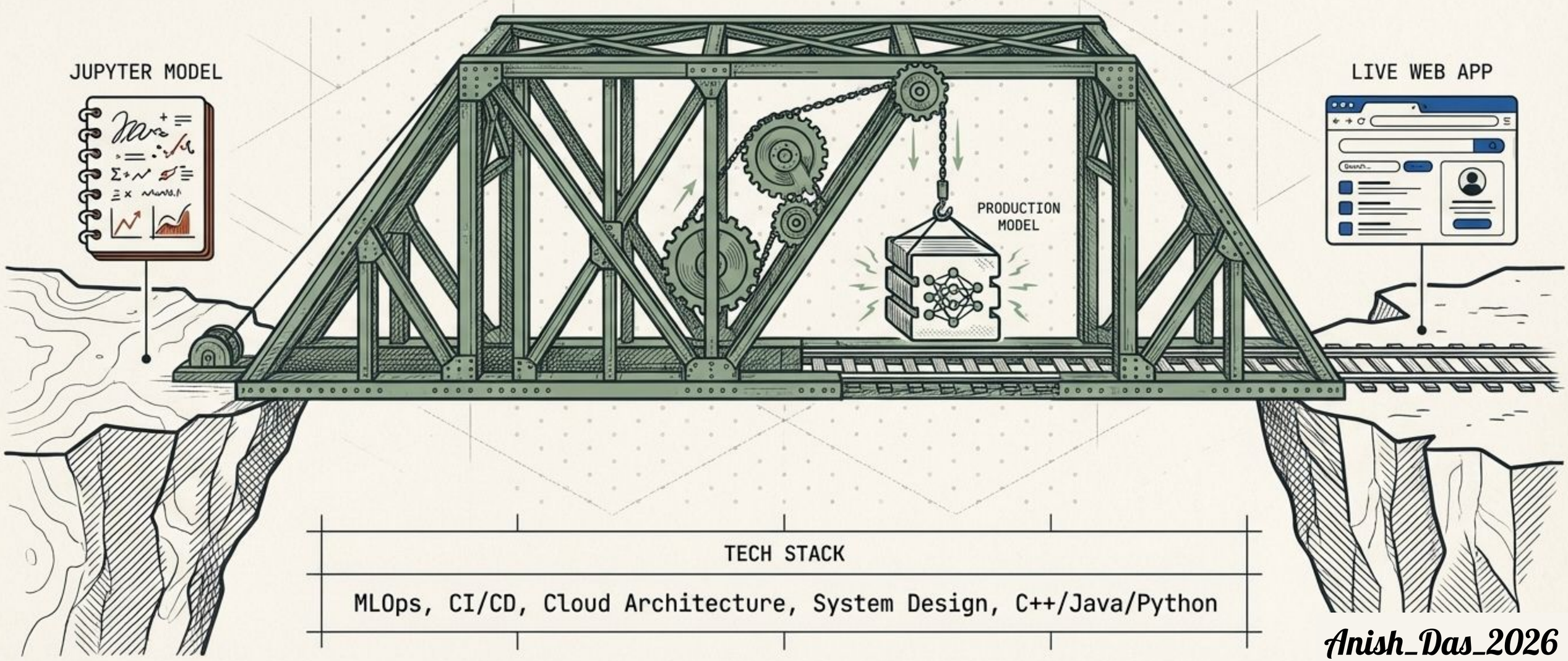

Anish_Das_2026

The ultimate role diagnostic matrix

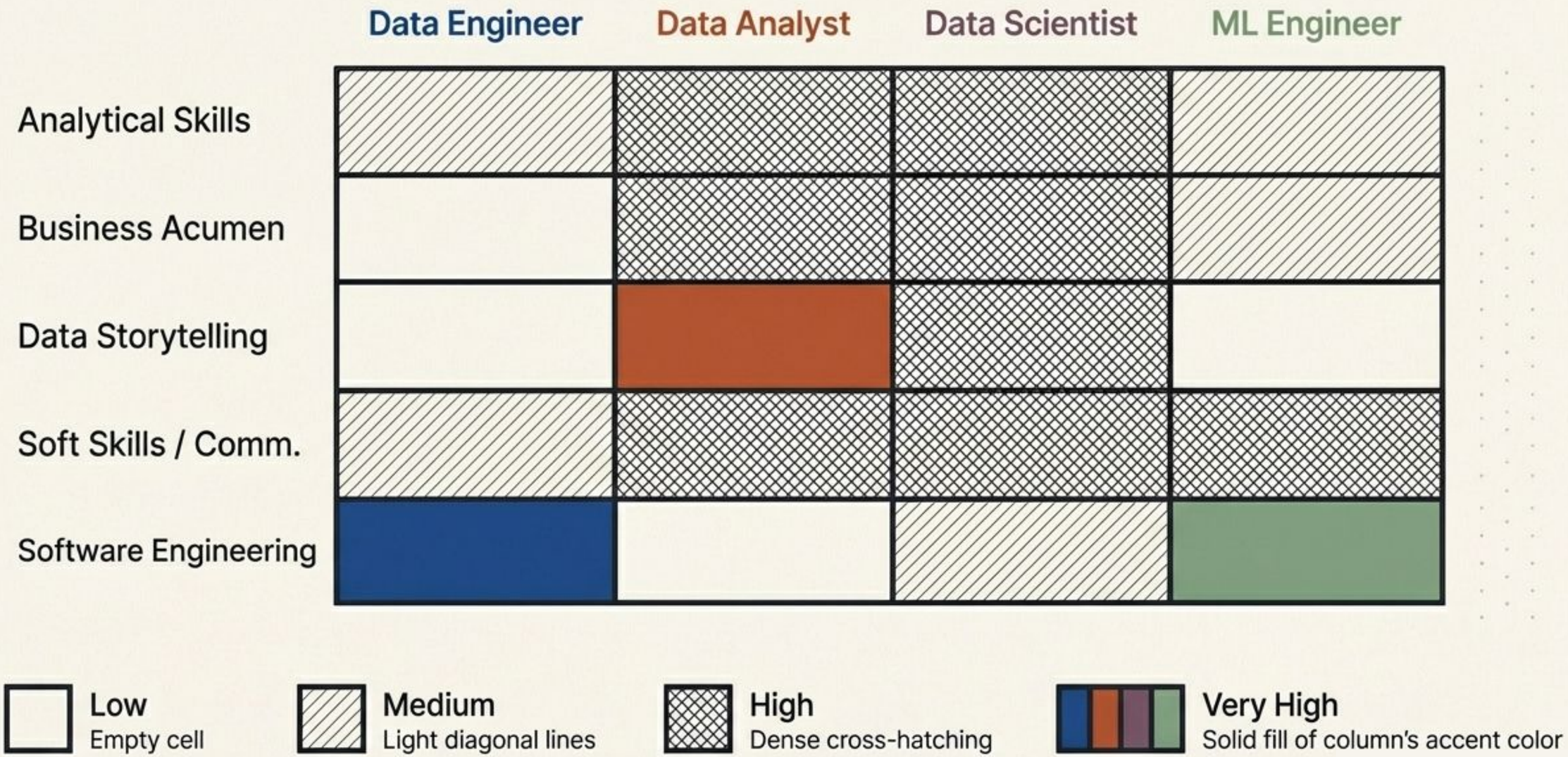

Anish_Das_2026

Which node in the pipeline belongs to you?

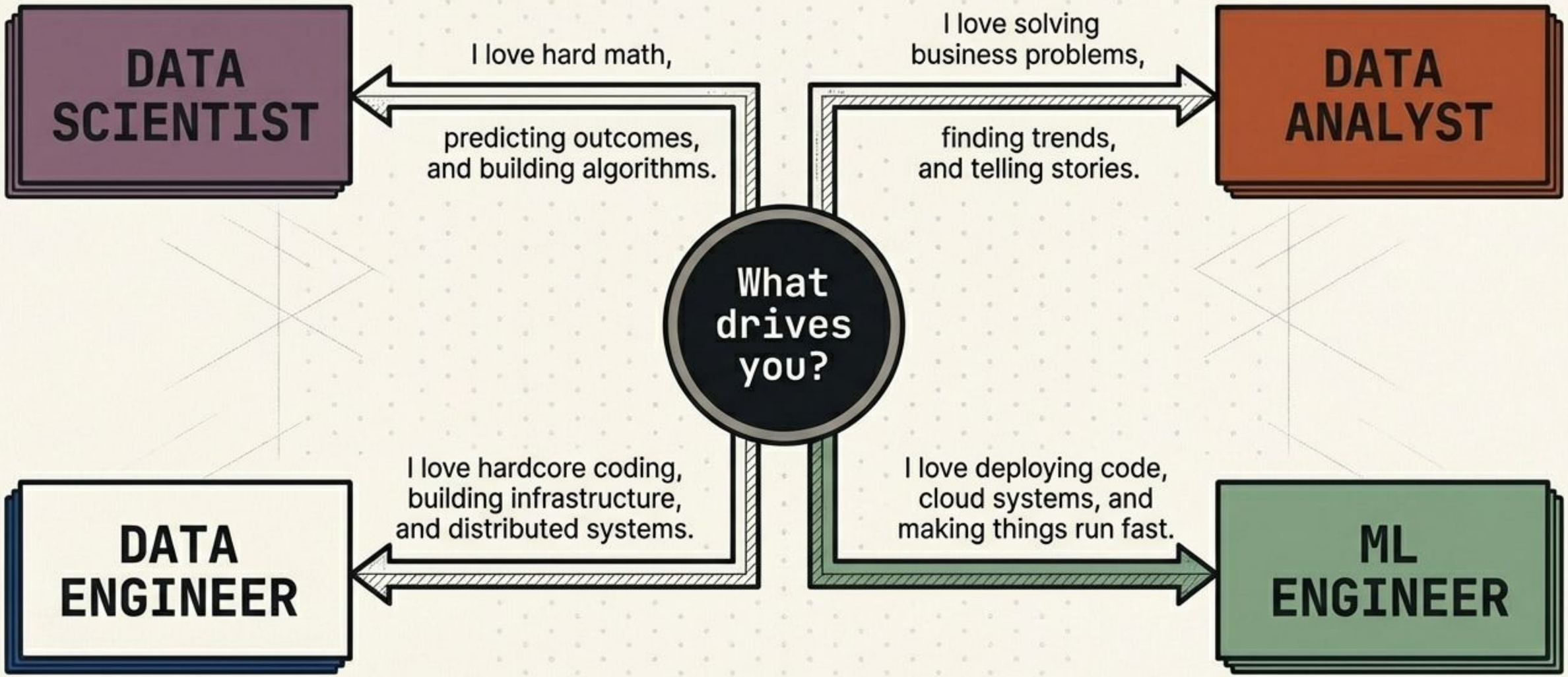

Anish_Das_2026

The Golden Rule of the Data Job Hunt

Job titles are notoriously fluid and act as marketing tools for companies. Always read the required tech stack and daily responsibilities before applying. Titles are marketing; skills are reality.

Job Title: ~~Data Scientist~~

Requirements: Data Pipelines, Apache Spark, Cloud Infrastructure

This is a Data Engineer job.

Anish_Das_2026