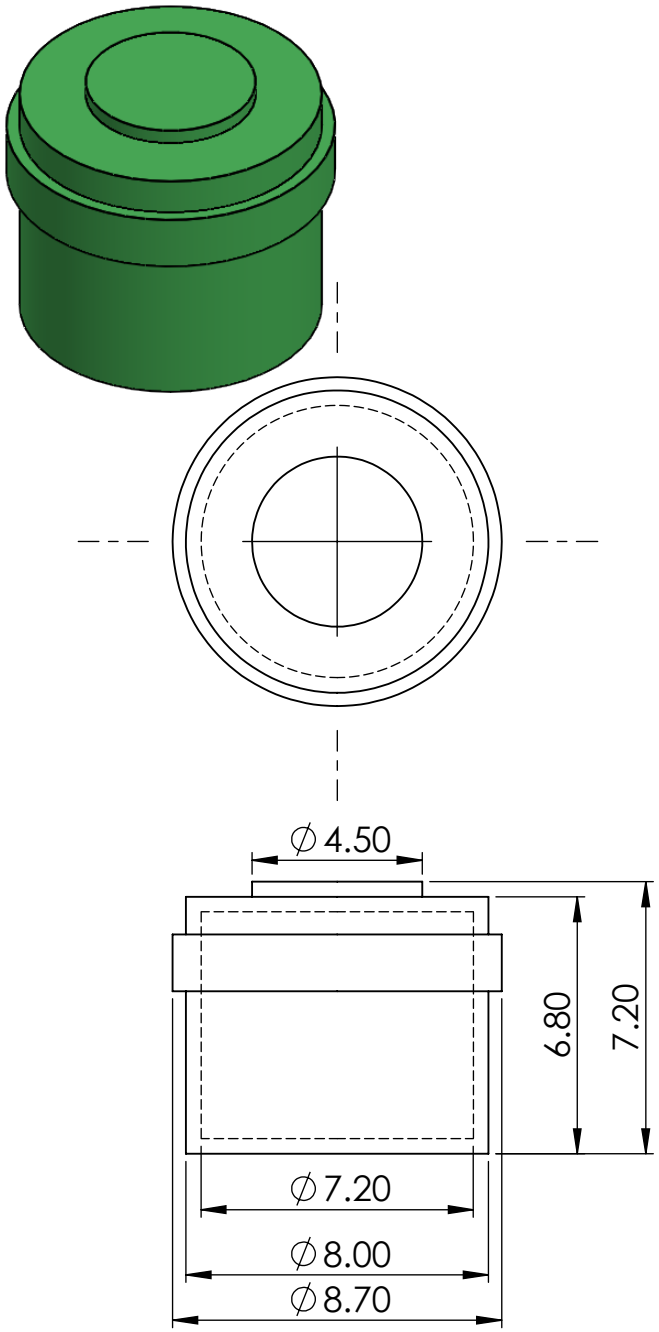

Battery Holder

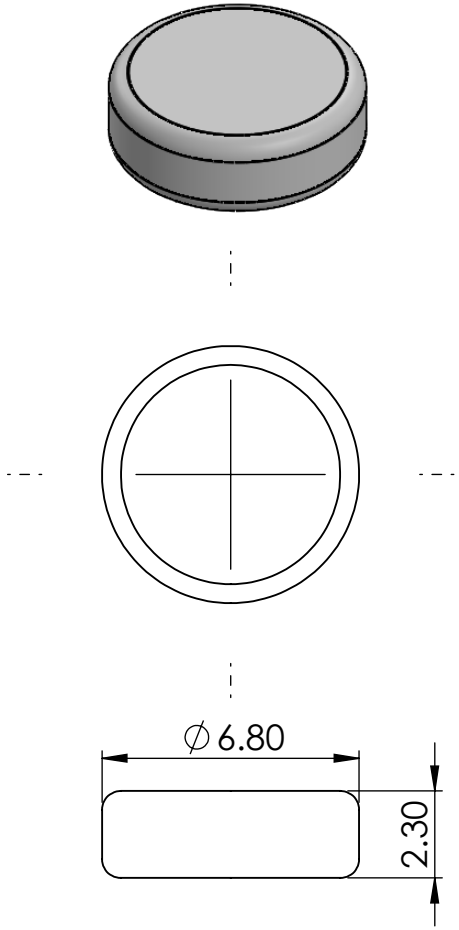

Battery

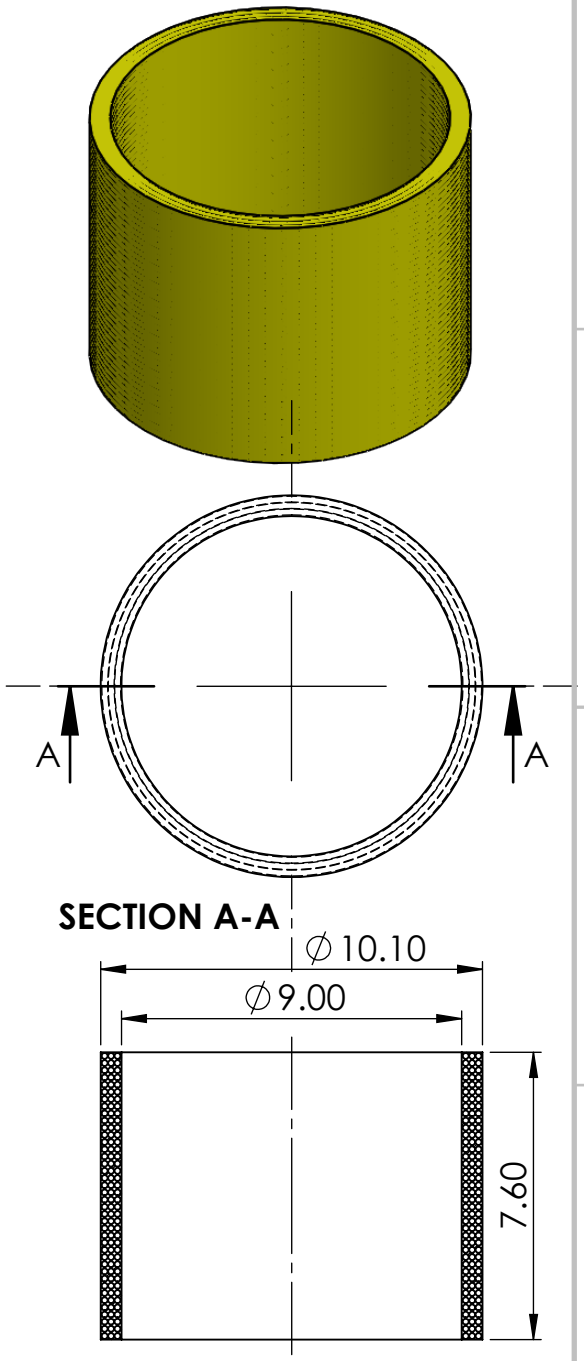

Communication Coil

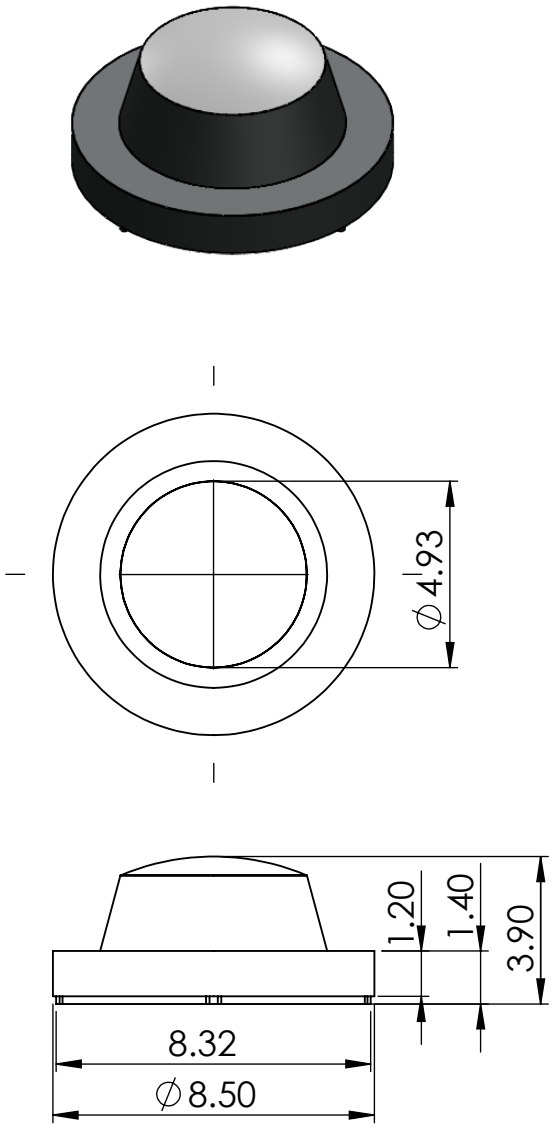

Camera

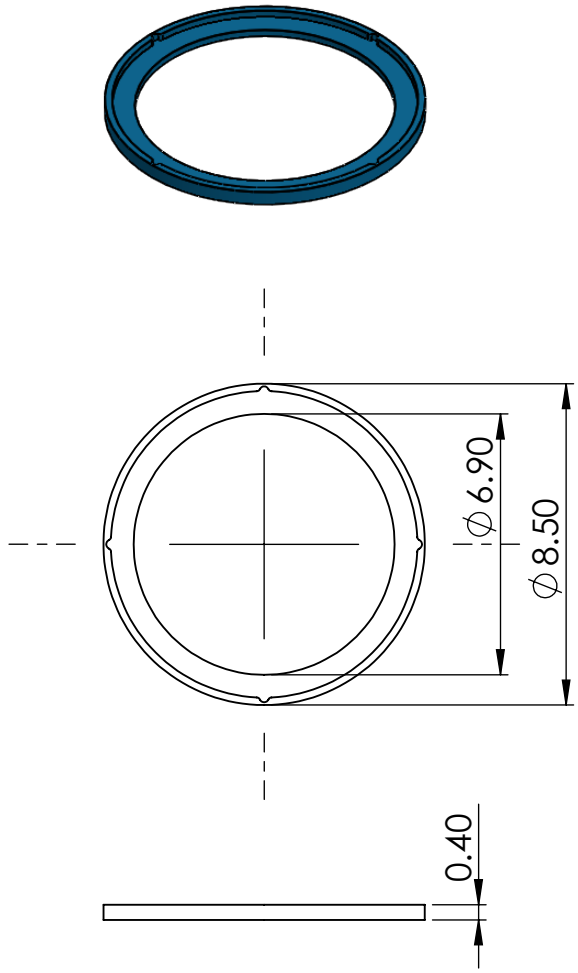

Camera Holder

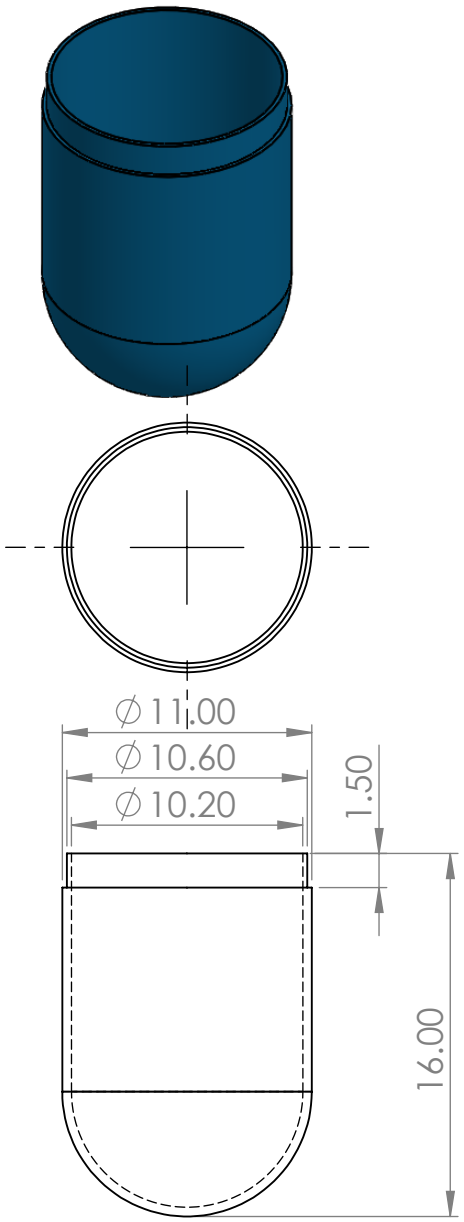

Bottom Part

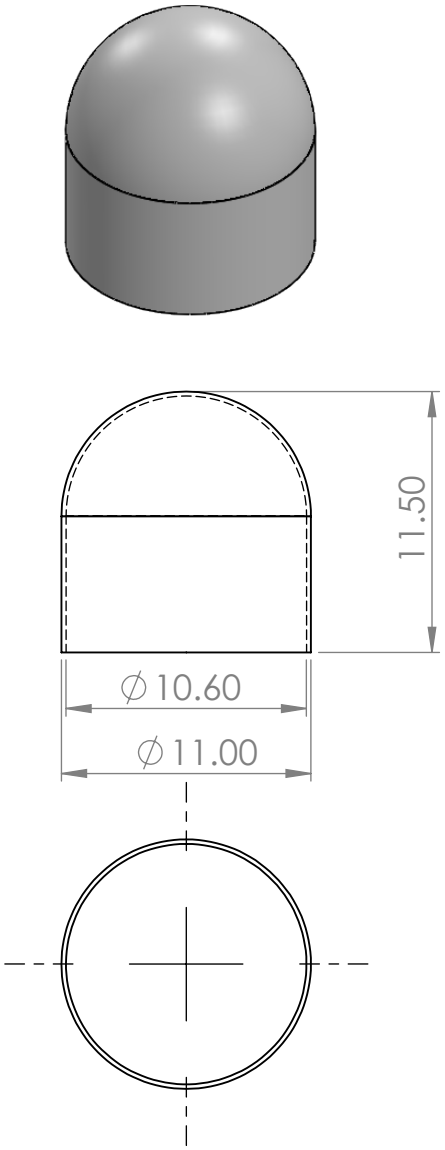

Top Part