Abstract

Wireless Capsule Endoscopy (WCE) has revolutionized gastrointestinal (GI) diagnostics by providing a non-invasive, patient-friendly means to visualize the small intestine; however, it remains constrained by high lesion miss rates, uncontrolled peristaltic motion, and the absence of physiological data to contextualize visual findings. Current WCE systems function as passive imaging devices, relying solely on structural visualization and often failing to detect subtle or early-stage mucosal abnormalities that accompany inflammation or neoplastic transformation. To overcome these limitations, this study introduces GutSe, a novel multi-sensor capsule that integrates optical imaging with real-time physiological sensing to create a synergistic and data-driven diagnostic platform. The prototype combines a high-resolution CMOS camera with an Iridium Oxide (IrOx)-based electrochemical pH sensor and a miniaturized thermistor, encapsulated within a biocompatible 3D-printed shell fabricated using stereolithography (SLA). A flexible printed circuit board (PCB) integrates all sensors, power-efficient electronics, and an RF-based data transmission unit to maintain functionality within standard ingestible dimensions. Electrochemical characterization of the IrOx pH sensor revealed a near-Nernstian sensitivity of −53.92 mV/pH with a linearity coefficient (R^2) of 0.9770, confirming its reliability in detecting minute pH variations in simulated GI environments. The fusion of biochemical and visual data enables GutSe to algorithmically flag physiologically significant video frames, reducing manual review time while improving diagnostic precision. By correlating localized pH and temperature fluctuations with visual features, GutSe advances beyond conventional imaging-only systems toward intelligent, context-aware diagnostics. This work lays the foundation for future capsule-based clinical tools that integrate sensing, imaging, and artificial intelligence for early, accurate, and data-supported detection of gastrointestinal pathologies.

***Keywords*: *Wireless Capsule Endoscopy*; *pH Sensing*; *Temperature Monitoring*; *Multi-Modal Diagnostics*.**

Contents

Abstract i

List of Figures iii

List of Tables iv

1 Introduction 1
- 1.1 Aim . . . 2
- 1.2 Objectives . . . 2

2 Literature Review 3
- 2.1 Research Gap . . . 8

3 Methodology 9
- 3.1 Materials . . . 9
  - 3.1.1 Structural and Mechanical Materials . . . 9
  - 3.1.2 pH Sensor Fabrication Materials . . . 9
- 3.2 Prototyping and Fabrication . . . 10
  - 3.2.1 Prototype Design and Mechanical Fabrication . . . 10
  - 3.2.2 pH Sensor Design, Fabrication, and Characterization . . . 10
  - 3.2.3 Graphene-Based Temperature Sensing Protocol . . . 13

4 Results and Discussion 15
- 4.1 Preliminary Results . . . 15
  - 4.1.1 Mechanical Prototype . . . 15
  - 4.1.2 Electrochemical Sensor Characterization . . . 15
  - 4.1.3 Temperature Sensor Characterization . . . 17
- 4.2 Discussion . . . 18

5 Conclusion and Future Work 20

References 21

List of Figures

1.1 System architecture of the GutSe capsule and Data flow. 2

3.1 Mechanical Design of the GutSe Capsule Prototype. 11
3.2 Graphene-coated copper sensing pads. 13
3.3 Experimental setup for temperature-dependent resistance measurements for the calibration of graphene based Temperature Sensor. 14

4.1 CAD Modeling and cross-section of the GutSe Capsule Prototype 16
4.2 Isometric view of the GutSe capsule prototype; a),c) 3D-printed parts of the capsule in SLA and FDM, b), d) Size comparison of the SLA and FDM Capsule with respect to a coin 16
4.3 Experimental workflow for the calibration of a potentiometric Iridium Oxide (IrOx) pH sensor. 17
4.4 Temperature-dependent normalized resistance response $(\Delta R/R_0)$ of the graphene-based sensor in pH 4, pH 7, and pH 9 buffer environments. 18

List of Tables

2.1 Overview of Commercial and Research-Based Ingestible Capsules 4

3.1 GutSe Prototype Technical Specifications 10

Chapter 1

Introduction

Wireless Capsule Endoscopy (WCE) has transformed gastrointestinal (GI) diagnostics by providing a non-invasive and patient-friendly method to visualize the small intestine, overcoming the discomfort and limited reach of conventional endoscopy (Asci et al.; Gounella et al.). The introduction of swallowable camera capsules enabled clinicians to observe hard-to reach regions such as the jejunum and ileum (Asci et al.), significantly improving diagnosis of disorders like obscure GI bleeding, Crohn's disease, and small bowel tumors (Gounella et al.). This innovation established WCE as a preferred tool for minimally invasive intestinal imaging, greatly enhancing clinical accessibility and patient comfort. However, WCE continues to face a persistent limitation—missed lesion rates ranging between 9driven by peristalsis (Simi et al.), image artifacts due to bile or mucus (Lee et al.), and the subtle visual presentation of early-stage or flat lesions (Lewis et al.). As a result, WCE remains heavily dependent on chance and clinician vigilance, with diagnosis hinging on whether a lesion appears clearly and is correctly recognized during review of thousands of frames (Renna et al.). Enhancements in resolution or frame rate offer only marginal benefit, as the key issue lies in the absence of physiological context to guide attention toward abnormalities. To overcome these challenges, the GutSe capsule introduces a shift from passive imaging to intelligent, multi-modal diagnostics. It integrates pH and temperature sensors with a high resolution camera to simultaneously capture physiological and visual data. Localized fluctuations in these parameters—indicative of inflammation, infection, or neoplastic activity—can algorithmically flag relevant frames for clinician review (Asci et al.; Papanikolaou et al.). Unlike external magnetic navigation systems that improve capsule control but not diagnostic accuracy (Gounella et al.), GutSe enhances precision through internal physiological sensing. Comprising a biocompatible 3D-printed shell, Iridium Oxide-based pH sensor, miniaturized thermistor, CMOS camera (Miley et al.), and power-efficient electronics, GutSe represents a new generation of ingestible diagnostic devices that bridge physiology and visualization for earlier and more reliable detection of GI disease.

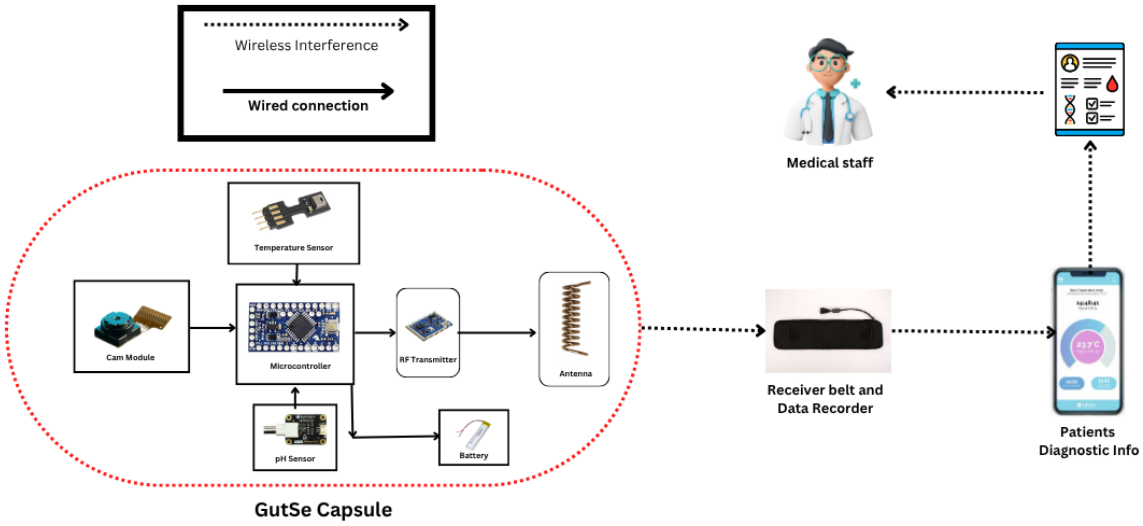

Figure 1.1: System architecture of the GutSe capsule and Data flow.

1.1 Aim

To develop GutSe, a multi-sensor imaging capsule that integrates physiological and visual sensing to enhance the detection of gastrointestinal (GI) lesions through data-driven and targeted diagnostics.

1.2 Objectives

- To design and 3D-print a biocompatible prototype of the GutSe capsule integrating structural and modular components.
- To design, fabricate, and characterize pH and temperature sensors for reliable physiological data acquisition in simulated GI conditions.
- Lab based validation the multisensor capsule using in vitro perisistalsis setup

Chapter 2

Literature Review

The comprehensive review of existing capsule technologies reveals significant progress in imaging, motility analysis, and physiological sensing. However, these advancements largely remain confined to specialized applications rather than integrated diagnostic systems. Imaging-focused capsules, such as PillCam and MiroCam, provide detailed visualization but lack the ability to interpret underlying biochemical changes, whereas physiological capsules like SmartPill or Atmo Gas focus solely on environmental sensing without visual correlation. AI-assisted capsules such as NaviCam and BioCam address data interpretation but still rely on passive imaging data devoid of contextual physiological input.

This segmentation of research demonstrates a clear technological gap: no current platform effectively merges real-time physiological sensing with simultaneous visual analysis to guide and enhance lesion detection. The lack of multi-modal data fusion limits the clinician's capacity to differentiate between benign and pathological mucosal variations. Additionally, most available systems depend on manual post-processing and lack autonomous, sensor-driven triggers that can dynamically prioritize frames for diagnostic review. GutSe addresses this gap by proposing a unified framework that integrates imaging, pH, and temperature sensing to create a context-aware, data-guided diagnostic tool, thereby bridging the disconnect between structural and functional gastrointestinal assessment.

Table 2.1: Overview of Commercial and Research-Based Ingestible Capsules

Capsule	Company	Medical Application	Features and Technical Specifications	Size (D x L)	Author(s) / Reference
PillCam SB/ SB2	Medtronic	Diagnosis of small bowel pathologies, including for paediatric patients.	1 video camera; fixed high frame rate of 2 or 4 fps.	11.4 mm × 26.4 mm	Swain et al. (2000), Miley et al. (2021)
PillCam SB3	Medtronic	Visualization of small bowel; monitor lesions from obscure bleeding and Crohn's disease.	156° FOV, 2-6 fps, 256 × 256 resolution, 4 LEDs, 3-lens system, 8 h battery life, adaptive frame rate.	11 mm × 26 mm	Eberhardt & Forli (2014), Miley et al. (2021)
PillCam Patency Capsule	Medtronic	Confirms unobstructed GI tract prior to capsule endoscopy.	Dissolvable materials, RFID tag detectable by X-ray, dissolves after 30 h.	11 mm × 26 mm	Pennazio et al. (2015)
PillCam ESO 2/ESO 3	Medtronic	Investigation of oesophageal disorders.	2 cameras; 19 fps (ESO2), 35 fps (ESO3).	11.4 mm × 26.4 mm / 11.6 mm × 31.5 mm	Eliakim et al. (2009)
PillCam UGI system	Medtronic	Visualization of upper GI tract; detect gross bleeding.	18-35 fps, variable frame rate, dynamic image capture.	11 mm × 26 mm	Delvaux et al. (2020)
PillCam COLON 2	Medtronic	Detects colon polyps; alternative to colonoscopy.	336° FOV, 4-35 fps, 10 h battery life, dual cameras.	11.6 mm × 32.3 mm	Spada et al. (2011)

Continued on next page

Table 2.1 – continued from previous page

Capsule	Company	Medical Application	Features and Technical Specifications	Size (D x L)	Author(s) / Reference
PillCam Crohn's Capsule	Medtronic	Visualization of small bowel and colon mucosa.	336° FOV, 256 × 256 resolution, dual heads, 10 h battery.	11.6 mm × 32.3 mm	Eliakim et al. (2018)
OMOM	Jinshan Science & Technology	Diagnosis of OGIB, diarrhoea, IBD, tumors.	140° FOV, 2 fps, 10 h battery, CMOS sensor.	13 mm × 28 mm	Wang et al. (2015)
EndoCapsule EC-10	Olympus	Small intestine endoscopy; detect mucosal abnormalities.	160° FOV, 2 fps, CCD imager, 12 h battery.	11 mm × 26 mm	Iddan et al. (2013)
MiroCam	IntroMedic	Detection of bleeding, vascular lesions, polyps.	150° FOV, 6 fps, 320 × 320 resolution, 11 h battery.	11 mm × 24 mm	Kim et al. (2014)
CapsoCam Plus	Capso Vision	Panoramic imaging of small bowel mucosa.	360° FOV, 20 fps, 15 h battery life.	11 mm × 31 mm	Keller et al. (2019)
Sayaka	RF System Lab	360° panoramic imaging; peptic motion tracking.	410k-pixel CCD, 30 fps, wireless power transfer.	9 mm × 23 mm	Takahashi et al. (2013)
NaviCam SB System	AnX Robotica	Small bowel diagnostics; AI-assisted reading.	Magnetic navigation, dual camera, AI-assisted reading.	11.8 mm × 27 mm	Zou et al. (2020)
NaviCam Stomach System	AnX Robotica	Real-time stomach visualization; non-sedated procedure.	360° magnetic control, 5D movement.	11.8 mm × 27 mm	Li et al. (2021)

Continued on next page

Table 2.1 – continued from previous page

Capsule	Company	Medical Application	Features and Technical Specifications	Size (D x L)	Author(s) / Reference
NaviCam Colon System	AnX Robotica	Non-invasive colon examination.	Dual cameras, high-res imaging.	N/A	Yang et al. (2021)
BioCam Endoscopic Capsule	BioCam	Diagnosis of Crohn's disease, celiac disease, tumors.	Al-powered automatic detection.	11 mm × 23 mm	Petrov et al. (2021)
C-Scan Cap	Check-Cap	Detects colorectal polyps; alternative to colonoscopy.	Low-dose X-ray, 3D mapping, cloud analysis.	N/A	Ben-Horin et al. (2017)
Sonopill	Sonopill Programme	Robotic ultrasound endoscopy.	Magnetic control, ultrasound transducers, camera, LEDs.	21 mm × 39 mm	Cochran et al. (2020)
CorTemp Pill	HQ Inc.	Monitors core body temperature.	Quartz crystal oscillator, 262-300 kHz comms.	10.7 mm × 22.4 mm	Richmond et al. (2016)
VitalSense Capsule	Philips Respironics	Monitors temperature, HR, respiration.	25 – 50 °C range, 240 h battery, 1 m range.	8.6 mm × 23 mm	Lawrence et al. (2015)
eCelsius Capsule	BodyCap	Tracks body temperature in athletes and patients.	±0.2 °C accuracy, 20 days battery.	8.9 mm × 17.7 mm	Barreto et al. (2019)
VibraBot Capsule	AnX Robotica	Nonpharmacologic constipation relief.	Adjustable vibration frequency, 180 min use.	11.8 mm × 26.7 mm	Liu et al. (2020)

Continued on next page

Table 2.1 – continued from previous page

Capsule	Company	Medical Application	Features and Technical Specifications	Size (D x L)	Author(s) / Reference
Vibrant Capsule	Vibrant Gastro	Constipation treatment capsule.	Flat motor, adjustable vibration, algorithmic control.	11.3 mm × 24.2 mm	Ron et al. (2020)
Atmo Gas Capsule	Atmo Biosciences	Measures intestinal gases and fermentation.	Detects H_2, O_2, CO_2, CH_4; 72 h monitoring.	11 mm × 20 mm	Kalantar-Zadeh et al. (2018)
Proteus Discover	Proteus Otsuka Pharma	Tracks oral drug ingestion adherence.	Biosensor pill + patch + app.	N/A	Chai et al. (2019)
SmartPill Motility Capsule	SmartPill Corp.	Measures GI motility and pH.	434 MHz, pH $0.05 - 9.0$, pressure $0 - 350$ mmHg.	13 mm × 26 mm	Cassilly et al. (2008)
Bravo Reflux System	Medtronic	Ambulatory pH testing for GERD.	Measures pH every 6 s for 96 h.	5.9 mm × 26.7 mm	Pandolfino et al. (2009)
Heidelberg Capsule	Heidelberg Medical Inc.	Diagnoses stomach acid abnormalities.	Tethered capsule, RF transmitter, 6-h life.	7.1 mm × 15.4 mm	Kuo et al. (1983)
IntelliCap System	Medimetrics / Philips	pH and temperature monitoring for drug delivery.	Telemetric drug delivery device, pH/temp sensors.	11 mm × 26.7 mm	Stark et al. (2018)

2.1 Research Gap

- **Lack of Multi-Modal Integration:** Current capsule technologies are siloed, with research focusing on either imaging or physiological sensing separately, but not on creating a single, synergistic platform that combines both.
- **Absence of a Real-Time, Sensor-Guided Framework:** No system currently exists that uses physiological data (like pH or temperature) to intelligently and automatically guide visual analysis by flagging relevant video segments in real-time, leaving diagnostic accuracy unimproved.

Chapter 3

Methodology

The development of the GutSe capsule prototype followed a systematic approach encompassing material selection, device fabrication, and sensor characterization. Each component-mechanical, electronic, and biochemical was designed for miniaturization, biocompatibility, and functional integration within an ingestible form factor. The following sections describe the materials used and the methodology for mechanical design, prototyping, and electrochemical development of the Iridium Oxide (IrOx)-based pH sensor.

3.1 Materials

The construction and fabrication of the GutSe capsule prototype require a specific set of materials selected for their biocompatibility, electronic properties, and chemical reactivity.

3.1.1 Structural and Mechanical Materials

- **Capsule Casing:** A photocurable, biocompatible resin is used for the capsule's main body and transparent dome, fabricated via Stereolithography (SLA) 3D printing.
- **Communication Antenna:** Copper traces integrated into the flexible PCB design to form the RF antenna for wireless data transmission.

3.1.2 pH Sensor Fabrication Materials

- **Electrodes:**
  - **Working Electrode:** A gold (Au) film deposited on the flexible PCB serves as the conductive base for the Iridium Oxide (IrOx) sensing film.
  - **Reference Electrode:** A Silver/Silver Chloride $(Ag/AgCl)$ ink is used to create the stable reference electrode on the flexible PCB.

  - **Counter Electrode:** A Platinum (Pt) electrode is utilized during the cyclic voltammetry process for the deposition of the Iridium Oxide film.

- **Chemical Reagents for IrOx Solution:**
  - Potassium hexachloroiridate (III)
  - Oxalic acid (C2H2O4.2H2O)
  - Potassium carbonate (K2CO3)
  - Deionized water

3.2 Prototyping and Fabrication

3.2.1 Prototype Design and Mechanical Fabrication

The initial phase focused on the physical design and construction of the capsule housing. The capsule prototype was designed using SolidWorks CAD software. The capsule has an outer diameter of 11.00 mm and a total length of 26.00 mm, conforming to standard ingestible device sizes for safe transit through the GI tract. The housing is a two-part assembly, featuring a main body and a transparent dome, which allows for straightforward integration of the internal components. The final capsule body was fabricated using SLA 3D printing, a technique chosen for its ability to produce detailed and precise structures with biocompatible materials.

Table 3.1: GutSe Prototype Technical Specifications

Category	Specification
Outer Diameter	11.00 mm
Length	26.00 mm
Casing Material	Photocurable Biocompatible Resin
Image Sensor	CMOS Sensor with 4 integrated LEDs
PCB Type	Flexible Printed Circuit Board
PCB Diameter	8.5 mm
Communication	RF Transmitter with Copper Antenna
Battery Life Target	72 hours

3.2.2 pH Sensor Design, Fabrication, and Characterization

This phase details the development of the capsule's core physiological sensing capability: a custom-fabricated, miniaturized pH sensor.

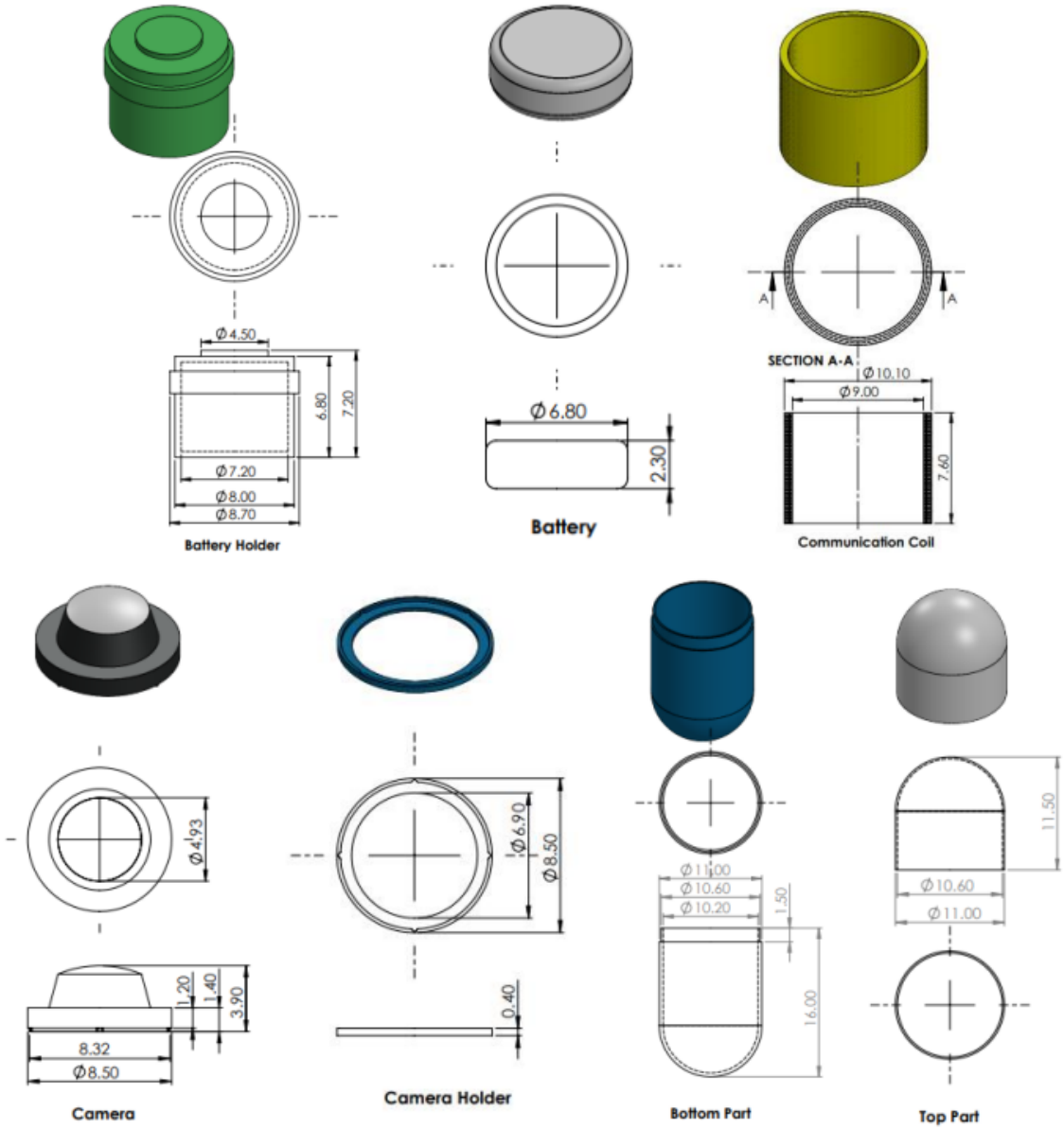

Figure 3.1: Mechanical Design of the GutSe Capsule Prototype.

Sensor Design and Working Principle

The sensor is a two-electrode electrochemical system fabricated on a flexible PCB substrate. The working electrode (WE) consists of an Iridium Oxide (IrOx) film deposited onto a gold (Au) pad. IrOx is selected for its excellent biocompatibility, chemical inertness, and its known super-Nernstian response, which provides high sensitivity to pH changes. A stable Silver/Silver Chloride $(Ag/AgCl)$ reference electrode (RE) completes the potentiometric circuit. A Platinum (Pt) counter-electrode is also included in the fabrication design for use during the electrochemical deposition process.

Fabrication Methodology

The fabrication of the IrOx pH sensor involves a multi-step chemical and electrochemical process:

1. **Preparation of Iridium Oxide Solution:** The precursor solution was prepared by dissolving 62.7 mg of potassium hexachloroiridate (III) and 87.0 mg of oxalic acid in 30 ml of deionized water. To this mixture, 331.7 mg of potassium carbonate was added. The solution was then heated to $60°C$ and stirred at 800 rpm for approximately 5-6 hours until it turned transparent. After heating, the solution was stirred for an additional 24 hours at room temperature, during which its color changed to a light black/purple, indicating the formation of the iridium oxide precursor.

2. **Working Electrode Preparation:** The working electrodes were prepared on the flexible PCB by first depositing a layer of gold to serve as a conductive base. This ensures good adhesion and electrical contact for the subsequent IrOx layer.

3. **Electrochemical Deposition of IrOx:** The Iridium Oxide film was electrochemically deposited onto the gold working electrodes using Cyclic Voltammetry (CV). This process was performed using a three-electrode setup (Au WE, $Ag/AgCl$ RE, and Pt counter-electrode). To achieve a uniform and stable IrOx film, 21 CV scans were performed between -0.786 V and 0.686 V at a scan rate of 0.1 V/s. This method allows for precise control over the thickness and morphology of the pH-sensitive film.

Electrochemical Characterization

The performance of the fabricated sensor was validated using Open-Circuit Potentiometry. The sensor was immersed in a series of standard buffer solutions with known pH values (3, 4, 5, 7, and 8). The potential difference between the working and reference electrodes was measured over a 60-second interval for each solution to establish a stable reading. This process allows for the creation of a calibration curve to determine the sensor's sensitivity (mV/pH) and linearity (R^2).

3.2.3 Graphene-Based Temperature Sensing Protocol

In addition to the IrOx pH sensor, a bench-top experiment was conducted to characterize a graphene-based resistive temperature sensor in simulated gastrointestinal conditions.

Materials

The materials used for the preparation and characterization of the graphene-based temperature sensor included commercially available graphene ink, copper pads and patterned sensing pads on a flexible substrate, conducting wires, a digital multimeter, pH buffer solutions of pH 4.0, 7.0, and 9.0, glass beakers, a Neuation iSTR HP550 PRIME with integrated temperature probe, and ethanol.

Methodology

The methodology for fabricating and characterizing the graphene-based temperature sensor consisted of two main stages: (i) coating of the copper sensing pads with graphene ink, and (ii) temperature-dependent resistance measurements across different pH buffer conditions.

1. Coating of Copper Pads

1. The copper (Cu) sensing pads were cleaned using ethanol to remove dust, oils, and other contaminants to ensure proper adhesion of the graphene ink.
2. Graphene ink was dispensed onto the pads using a microliter pipette, ensuring complete coverage of the inter-pad region to form a continuous conductive path.
3. The coated pads were dried using a hot-air gun at 80–$100°C$ for 1–2 minutes.
4. Steps 2 and 3 were repeated five times to obtain a uniform and stable conductive graphene film.

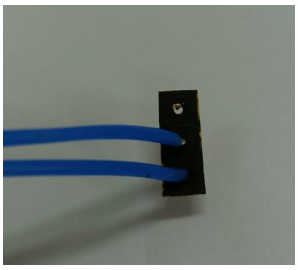

Figure 3.2: Graphene-coated copper sensing pads.

2. Temperature-Based Resistance Measurements

1. Conducting wires were soldered onto the graphene-coated pads to allow two-terminal resistance measurement using a digital multimeter.

2. A glass beaker was filled with pH 4 buffer solution, and the graphene-coated sensing region was fully submerged.

3. The beaker was placed on the Neuation iSTR HP550 PRIME ceramic hotplate, and the integrated temperature probe was inserted into the solution to monitor accurate temperature values.

4. The hotplate was set to operate in degrees Fahrenheit ($°F$). Each temperature step was held for 2 minutes to allow uniform heating.

5. Resistance values were recorded as the temperature increased from $86°F$ to $108°F$ (equivalent to 30–42$°C$) in $1°F$ increments. Stabilization was ensured before each measurement.

6. The full measurement cycle was repeated for pH 7 and pH 9 buffer solutions to compare the temperature response of the graphene sensor under different chemical conditions.

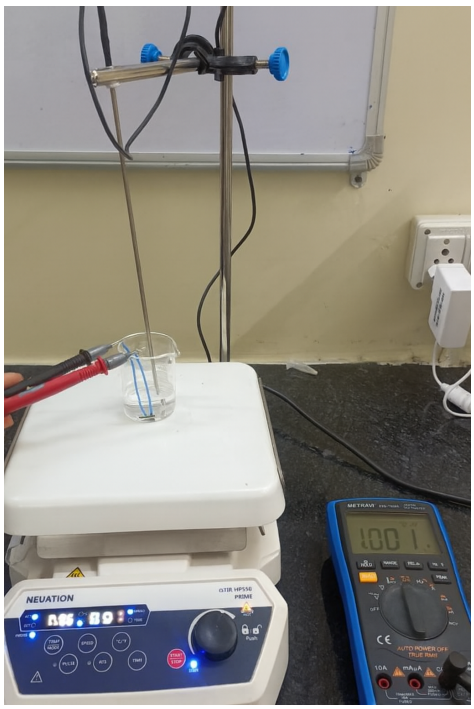

Figure 3.3: Experimental setup for temperature-dependent resistance measurements for the calibration of graphene based Temperature Sensor.

Chapter 4

Results and Discussion

This chapter presents the preliminary results from the initial phases of the GutSe project, focusing on the successful fabrication of the capsule prototype and the electrochemical characterization of the custom Iridium Oxide (IrOx) pH sensor. The discussion contextualizes these findings, evaluates their significance in relation to the project's aims, and explores the role of the proposed system architecture and artificial intelligence in achieving the final diagnostic goal.

4.1 Preliminary Results

The initial development phases have yielded successful outcomes, validating the core mechanical and sensing components of the GutSe capsule.

4.1.1 Mechanical Prototype

The capsule housing was successfully designed in SolidWorks and fabricated using Stereolithography (SLA) 3D printing. The resulting prototype adheres to the specified dimensions of 11.00 mm in diameter and 26.00 mm in length. This confirms the feasibility of constructing a capsule shell that is consistent with standard ingestible device sizes while accommodating the necessary internal components.

4.1.2 Electrochemical Sensor Characterization

The custom-fabricated IrOx pH sensor was tested using open-circuit potentiometry across a range of standard buffer solutions (pH 3 to 8). The sensor's response demonstrates a strong and predictable performance. A linear regression analysis of the data reveals two key performance metrics:

- **Sensitivity:** The sensor exhibited a sensitivity of $-53.92\ mV/pH$. This is a robust, near-Nernstian response, indicating that the sensor produces a distinct and measurable

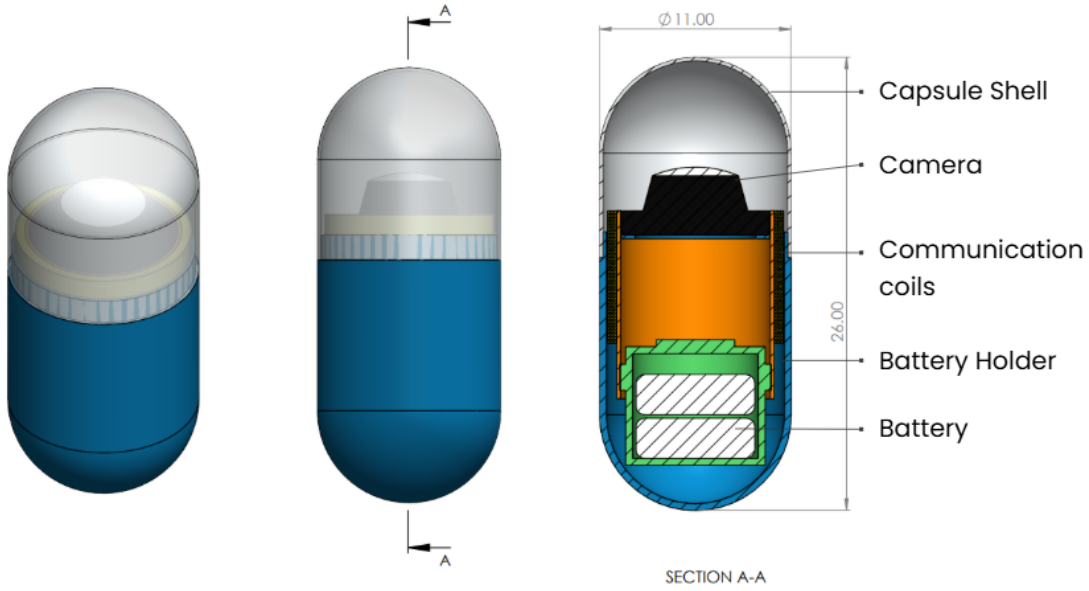

Figure 4.1: CAD Modeling and cross-section of the GutSe Capsule Prototype

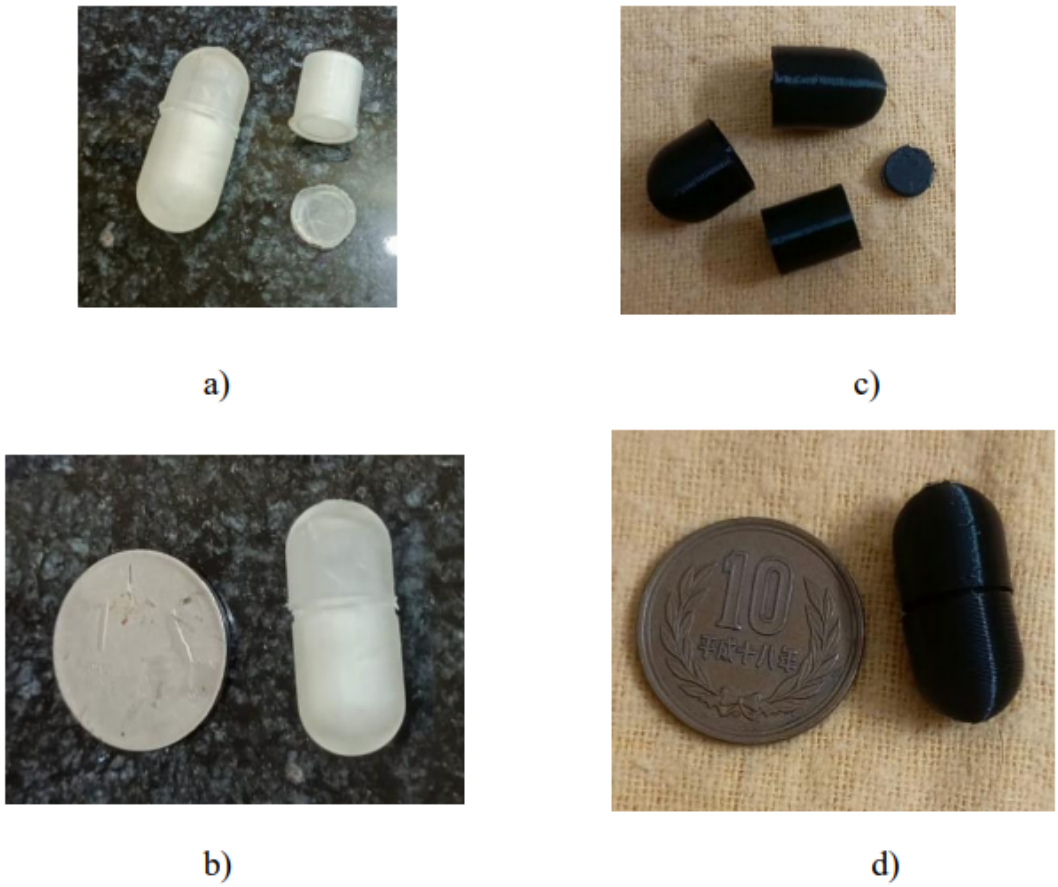

Figure 4.2: Isometric view of the GutSe capsule prototype; a),c) 3D-printed parts of the capsule in SLA and FDM, b), d) Size comparison of the SLA and FDM Capsule with respect to a coin

voltage change for each unit change in pH.

- **Linearity:** The coefficient of determination $(R^2 = 0.9770)$ confirms an excellent linear relationship between the measured potential and the solution's pH. This high degree of linearity is crucial for accurate and reliable pH measurements across the diverse environments of the GI tract.

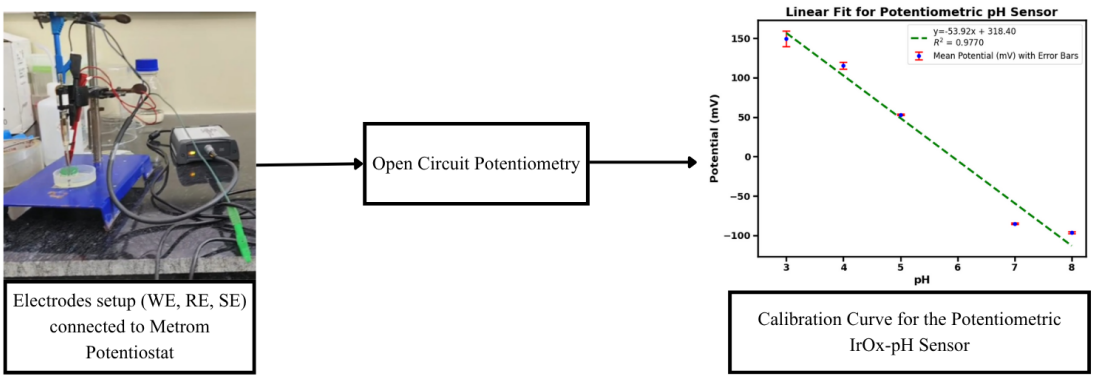

Figure 4.3: Experimental workflow for the calibration of a potentiometric Iridium Oxide (IrOx) pH sensor.

4.1.3 Temperature Sensor Characterization

The graphene-based temperature sensor was tested across the physiological range of 86–108°F (30–42°C) in buffer environments of pH 4, pH 7, and pH 9. The sensor exhibited a stable thermoresistive response, with a consistent decrease in normalized resistance $(\Delta R/R_0)$ as temperature increased. A linear regression analysis of the temperature–response data revealed three key performance metrics for each pH condition:

- **Temperature Sensitivity:** The sensor displayed pH-dependent sensitivity, with slopes of -1.017 (pH 4), -0.832 (pH 7), and -0.736 (pH 9), demonstrating clear Negative Temperature Coefficient (NTC) behaviour.

- **Linearity:** Strong linearity was observed for all conditions, with coefficients of determination of $R^2 = 0.9610$ (pH 4), $R^2 = 0.9799$ (pH 7), and $R^2 = 0.9605$ (pH 9), confirming predictable and stable thermal response.

- **pH Influence:** A decrease in slope magnitude with increasing pH was observed, reflecting the effect of ionic composition and proton concentration on graphene's interfacial doping and thermoresistive behaviour.

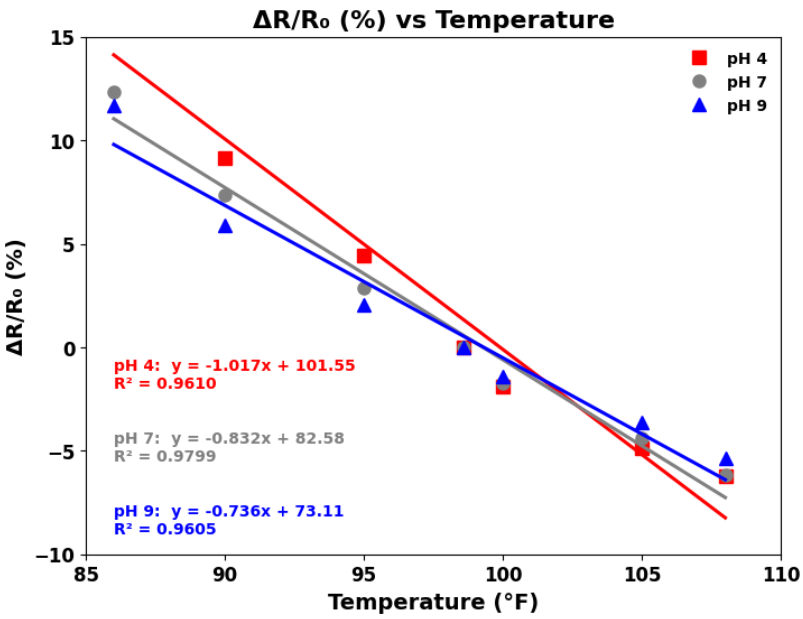

Figure 4.4: Temperature-dependent normalized resistance response $(\Delta R/R_0)$ of the graphene-based sensor in pH 4, pH 7, and pH 9 buffer environments.

4.2 Discussion

The findings from the initial development stages demonstrate that the fundamental structural and sensing components of the GutSe capsule have been successfully realized. The mechanically robust SLA-printed housing confirms that the required electronic and sensor modules can be accommodated within a compact, biocompatible, and safely ingestible form factor suitable for gastrointestinal applications.

The performance of the IrOx pH sensor is particularly noteworthy. The measured sensitivity of -53.92 mV/pH and high linearity ($R^2 > 0.97$) demonstrate that the custom electrochemical deposition protocol produced a reliable and responsive sensing film. The sensor's ability to detect small, localized pH variations is essential for identifying physiological changes associated with inflammation, bleeding, or mucosal abnormalities. This behaviour directly supports GutSe's diagnostic objective of coupling biochemical signals with imaging data to enhance lesion detectability.

The graphene-based temperature sensor further strengthens the physiological sensing capabilities of the prototype. Its clear Negative Temperature Coefficient (NTC) behaviour and strong linearity across the range of 86–108°F confirm predictable thermal response in diverse chemical environments. The trend in temperature sensitivity (pH 4 > pH 7 > pH 9) highlights the influence of proton concentration and ionic interactions on graphene's interfacial doping. Despite these variations, the consistently high R^2 values demonstrate that the sensor remains stable and dependable within the physiologically relevant temperature window. This capability is valuable for detecting localized thermal anomalies that may

accompany infection, inflammation, or abnormal GI activity.

Overall, the combined results from the mechanical prototype, pH sensor, and temperature sensor validate the core sensing framework of the GutSe system. The coherent performance across all three components indicates that the capsule can capture essential physiological information with high reliability. When integrated with imaging, these sensing modalities provide a pathway toward more context-aware and diagnostically powerful gastrointestinal monitoring.

Chapter 5

Conclusion and Future Work

This work successfully demonstrates the feasibility of the core sensing and structural components of the GutSe capsule, an ingestible diagnostic device designed for multi-modal gastrointestinal monitoring. The Iridium Oxide (IrOx) pH sensor exhibited a near-Nernstian sensitivity with high linearity, confirming its reliability in detecting localized biochemical variations within the GI environment. The graphene-based temperature sensor similarly showed consistent Negative Temperature Coefficient (NTC) behaviour with stable, linear resistance changes across physiologically relevant temperatures. The SLA-printed capsule housing further validated that these sensing elements can be accommodated within a compact, biocompatible, and safely ingestible form factor. Collectively, these results establish a strong foundation for developing a capsule capable of correlating physiological data with structural imaging to improve gastrointestinal diagnostics.

Following the successful validation of the pH sensor, the subsequent phases of the project will focus on the integration of all components into a fully functional prototype.

- **PCB Design and Fabrication:** The next phase will involve the design and fabrication of the flexible PCB that integrates the pH sensor, temperature sensor, microcontroller, power module, and imaging unit. This PCB will serve as the central platform enabling compact assembly and coordinated operation of all sensing and electronic components.

- **System Integration and Testing:** Following PCB development, all components will be assembled into the 3D-printed capsule housing. The fully integrated prototype will then undergo systematic testing to evaluate sensing accuracy, imaging performance, and system-level reliability under simulated gastrointestinal conditions.

References

[1] Gounella, R., Granado, T. C., Hideo Ando Junior, O., Luporini, D. L., Gazziro, M., & Carmo, J. P. (2023). Endoscope capsules: The present situation and future outlooks. *Bioengineering, 10*(12), 1347.

[2] Miley, D., Machado, L. B., Condo, C., Jergens, A. E., Yoon, K.-J., & Pandey, S. (2021). Video capsule endoscopy and ingestible electronics: Emerging trends in sensors, circuits, materials, telemetry, optics, and rapid reading software. *Advanced Devices & Instrumentation, 2021*, 9854040.

[3] Sharma, H., Kalita, D., Panda, R., Kumar, P., & Mirza, K. B. (2025). Effect of biofouling on electrochemical impedance parameters and sensitivity of polyvinyl alcohol-coated iridium oxide-based pH biosensors. *IEEE Transactions on Instrumentation and Measurement, 74*, 9500211.

[4] Barreto, G. M., Barroso, R., Martins, F. B., Sousa, N. M. F., Ferreira, J. J. A., & Soares, D. D. (2019). The e-Celsius performance ingestible temperature sensor is a valid and reliable thermoregulatory assessment tool. *Journal of Thermal Biology, 84*, 250-255.

[5] Ben-Horin, S., Bar-Meir, S., Goldstein, S., Sung, J., & Eliakim, R. (2017). Ultra-low-dose X-ray-based 3D reconstruction of the colon by a novel swallowable capsule. *Gastrointestinal Endoscopy, 85*(4), 849-855.

[6] Chai, P. R., Mohamed, F., & Boyer, E. W. (2019). The use of digital pills to improve adherence to pre-exposure prophylaxis for HIV prevention. *JAMA, 322*(2), 169-170.

[7] Cochran, S., Demore, C. E., & Saffari, N. (2020). Sonopill: A pill-sized device for diagnostic ultrasound imaging of the gastrointestinal tract. *Ultrasound in Medicine & Biology, 46*(10), 2535-2545.

[8] Kalantar-Zadeh, K., Berean, K. J., Ha, N., Chrimes, A. F., Chen, K., Ou, J. Z., ... & Muir, J. G. (2018). A human pilot trial of ingestible electronic capsules capable of sensing different gases in the gut. *Nature Electronics, 1*(1), 79-87.

[9] Lawrence, D. J., El-Hamamy, H., & De-Vires, S. (2015). Validation of the VitalSense® wireless physiological monitoring system. *Journal of Athletic Training, 50*(7), 754-760.

[10] Liu, G., Li, L., Liu, Y., Zhao, Y., Hou, X., & Liu, J. (2020). A novel vibrating capsule for stimulating peristalsis in patients with constipation: A prospective pilot study. *Digestive Diseases and Sciences, 65*(6), 1731-1738.

[11] Petrov, I., Dimitrov, D., Velikova, T., & Gerenov, K. (2021, May). Novel capsule endoscopy system with Al-powered diagnostic support. Abstract presented at Digestive Disease Week (DDW) 2021, Virtual.

[12] Richmond, V. L., Davey, S. L., & Byrne, C. (2016). Ingestible temperature sensor: the accuracy and feasibility of the CorTemp sensor in a healthy athletic population. *Journal of Sports Sciences, 34*(7), 652-658.

[13] Ron, Y., Hallevi, Z., & Yaacov, A. (2020). A novel vibrating capsule for the treatment of chronic constipation: A randomized, controlled, phase 3 study. *Gastroenterology, 158*(6), S-54.

[14] Eliakim, R., Fischer, D., Gralnek, I. M., Yablecovitch, D., Ephrath, H., & Suissa, A. (2018). The PillCam Crohn's capsule for monitoring mucosal healing in Crohn's disease: A prospective, single-center study. *Gastrointestinal Endoscopy, 87*(5), 1289-1296.

[15] Riccioni, M. E., Urgesi, R., Cianci, R., Bizzotto, A., Spada, C., & Costamagna, G. (2013). The Olympus Endocapsule 10 system for small-bowel capsule endoscopy: A single-center, prospective study in a large cohort of patients. *Gastrointestinal Endoscopy, 77*(1), 79-85.

[16] Keller, J., Fibbe, C., Volke, F., De Laffolie, J., Mbeunkui, F., Reimann-Zawadzki, M., & Layer, P. (2019). Inspection of the small bowel in patients with iron deficiency anemia using a new panoramic-view capsule endoscope: A prospective, consecutive-patient study. *Gastrointestinal Endoscopy, 89*(1), 156–163.

[17] Kim, H. S., Chun, H. J., Park, C. H., Kim, E. S., Choi, H. S., Keum, B., ... & Kim, J. H. (2014). An automatic diagnosis of small bowel bleeding lesions with capsule endoscopy by color and bleeding feature analysis. *Bio-Medical Materials and Engineering, 24*(6), 2533-2540.

[18] Li, N., Li, Z., Zhang, J., He, C., Li, Y., Wu, Y., & Liao, Z. (2021). Magnetically controlled capsule endoscopy for gastric disease: A prospective, single-center, two-arm study. *Endoscopy, 53*(1), 47–55.

[19] Spada, C., Hassan, C., Galmiche, J. P., Neuhaus, H., Dumonceau, J. M., Adler, S. N., & Costamagna, G. (2011). Colon capsule endoscopy: European Society of Gastrointestinal Endoscopy (ESGE) Guideline. *Endoscopy, 43*(6), 514–525.

[20] Takahashi, H., Kinoshita, S., Nakai, Y., Ishihara, T., & Takeyama, H. (2013). Novel self-propelling capsule endoscope using a magnetic guidance system. *Digestive Endoscopy, 25*(4), 488-493.

[21] Wang, P., Zhang, J., Liu, F., Meng, F., Li, Z., & Duan, Z. (2015). A multicenter long-term outcome study of OMOM capsule endoscopy in suspected small bowel bleeding. *Gastroenterology Research and Practice, 2015*, 346914.

[22] Yang, H., Liao, Z., Zou, W., Li, Z., Li, N., Wu, Y., ... & Hou, X. (2021). A pilot study of magnetically controlled capsule colonoscopy: a promising, non-invasive method for colon examination. *Endoscopy, 53*(12), 1277-1284.

[23] Zou, W. B., Hou, X. H., Xin, L., Liu, J., Jiang, B., Li, Z., ... & Liao, Z. (2020). Magnetically controlled capsule endoscopy for assessment of the small bowel: a prospective, two-center study. *Gastrointestinal Endoscopy, 91*(4), 869-877.

[24] Cassilly, D., Cacho, J., D'Haens, G., van den Brande, J. P. G., van der Woude, C. J., & Caunedo, A. (2008). Repeatability of the wireless motility capsule for the assessment of regional and whole gut transit times in healthy volunteers. *Gastroenterology, 134*(4), A-652.

[25] Kuo, B., & Castell, D. O. (1983). The Heidelberg capsule: A new method for the study of gastric acid secretion. *The American Journal of Gastroenterology, 78*(10), 667-670.

[26] Pandolfino, J. E., & Kahrilas, P. J. (2009). Prolonged pH monitoring: Bravo capsule. *Gastrointestinal Endoscopy Clinics of North America, 19*(1), 59-71.

[27] Stark, T., Sacher, F., Trivedi, M., Johnston, P., & Schellekens, H. (2018). The IntelliCap® system, an orally ingested, electronically controlled drug delivery device: Performance and functionality in fasted and fed volunteers. *Journal of Pharmaceutical Sciences, 107*(1), 327-334.

[28] Zhou, L., Wang, J., Xu, W., Liu, X., & Chen, X. (2020). A graphene-based wearable biosensor with linear pH response for on-body monitoring applications. *Sensors and Actuators B: Chemical, 319*, 128285.

[29] Park, S., Kim, H., & Hong, B. H. (2019). Graphenic materials for biocompatible temperature and pH sensors in wearable healthcare systems. *Biosensors and Bioelectronics, 126*, 16–27.

[30] Yang, T., Huang, R., Xu, B., Li, X., & Zheng, L. (2017). Flexible bias-free graphene microelectrodes for physiological pH monitoring in human serum. *ACS Applied Materials & Interfaces, 9*(49), 42773–42781.

[31] Li, Q., Feng, Y., Zhang, H., & Sun, P. (2021). Graphene oxide nanosheets coated with covalent organic frameworks for robust and wide-range pH sensing. *Journal of Materials Chemistry B, 9*(12), 2564–2573.

[32] Amjadi, M., Kyung, K.-U., Park, I., & Sitti, M. (2018). Graphene-based wearable temperature sensors with high sensitivity for healthcare monitoring. *Advanced Functional Materials, 28*(39), 1705248.

[33] Jang, H., Park, Y. J., Chen, X., Das, T., Kim, M. S., & Ahn, J.-H. (2020). Graphene-based flexible and implantable sensors for health monitoring: Temperature and pH detection in physiological environments. *Nature Communications, 11*, 2405.

[34] Ma, Y., Chen, S., Wang, M., Liu, H., & Zhang, H. (2019). Flexible and low-cost graphene-based sensors on paper for real-time monitoring of temperature and humidity. *Applied Materials Today, 16*, 196–203.