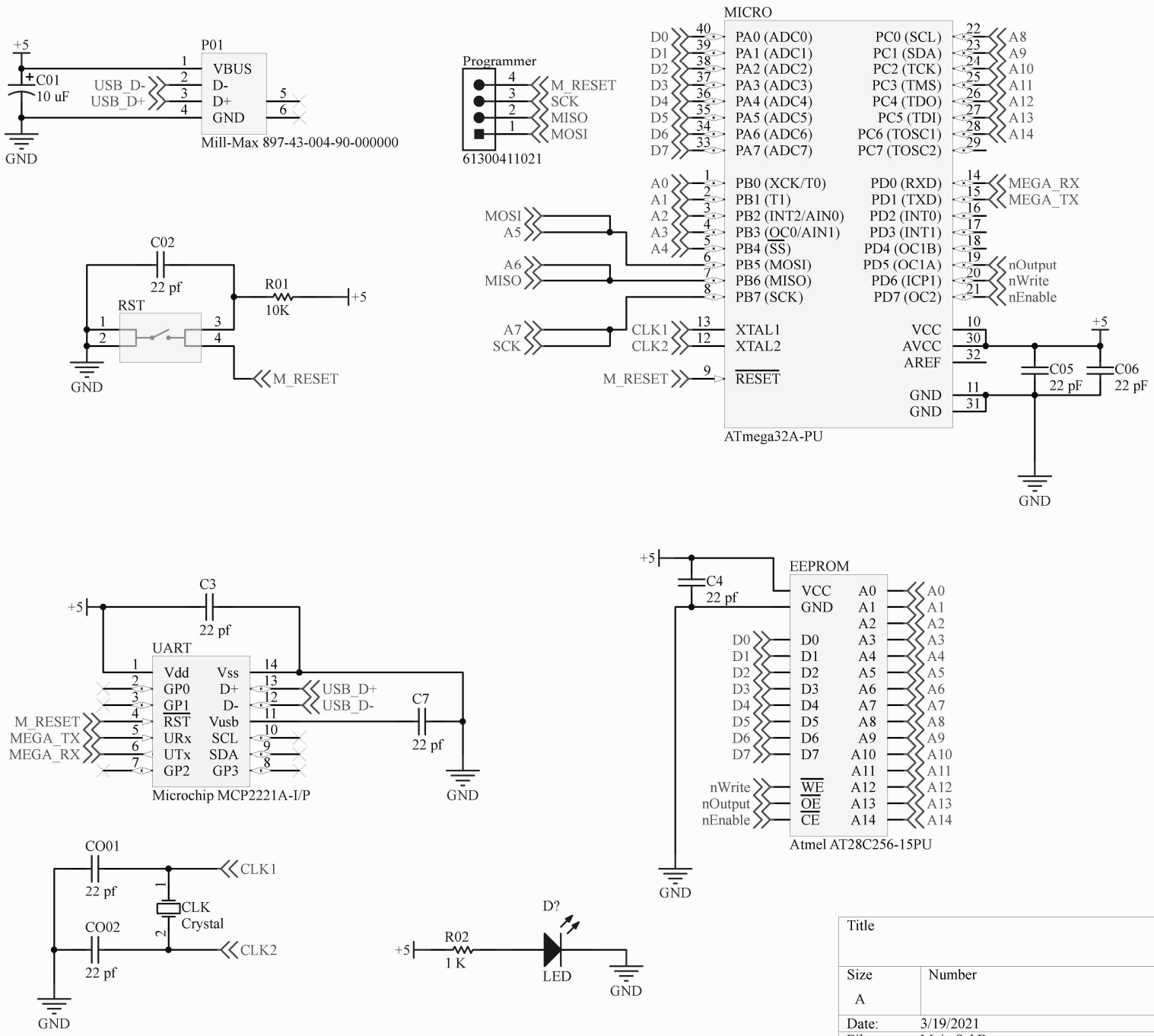

Title		
Size A	Number	Revision
Date: 3/19/2021		Sheet of
File: Main.SchDoc		Drawn By: