Till now, we studied some common interfacing methods for I/O ports and have also solved some problems based on I/O ports.

In all the above problems, the ports were either input or output, but using programmable peripheral Interface (PPI) chip 8255, the same port may be programmed to work as input or as output port.

Hence the above chip is also known as Programmable Input output (PIO) device.

Scanned with CamScanner

Programmable Input output (PIO) 8255

Programmable peripheral Interface (PPI) :

→ The Intel's 8255 is designed for use with Intels 8 bit, 16 bit and higher capability micro processors.

→ It has 24 input / output lines which may be individually programmed in two groups of twelve lines each, or three groups of eight lines.

→ The two groups of I/O pins are named as Group A and Group B.

→ Each of these two groups contain a sub group of 8 I/O lines called as 8 bit port and another sub group of four I/O lines or a 4 bit port.

→ Group A contains 8 bit port A and 4 bit port C upper.

→ Group B contains 8 bit port B and 4 bit port C lower.

Scanned with CamScanner

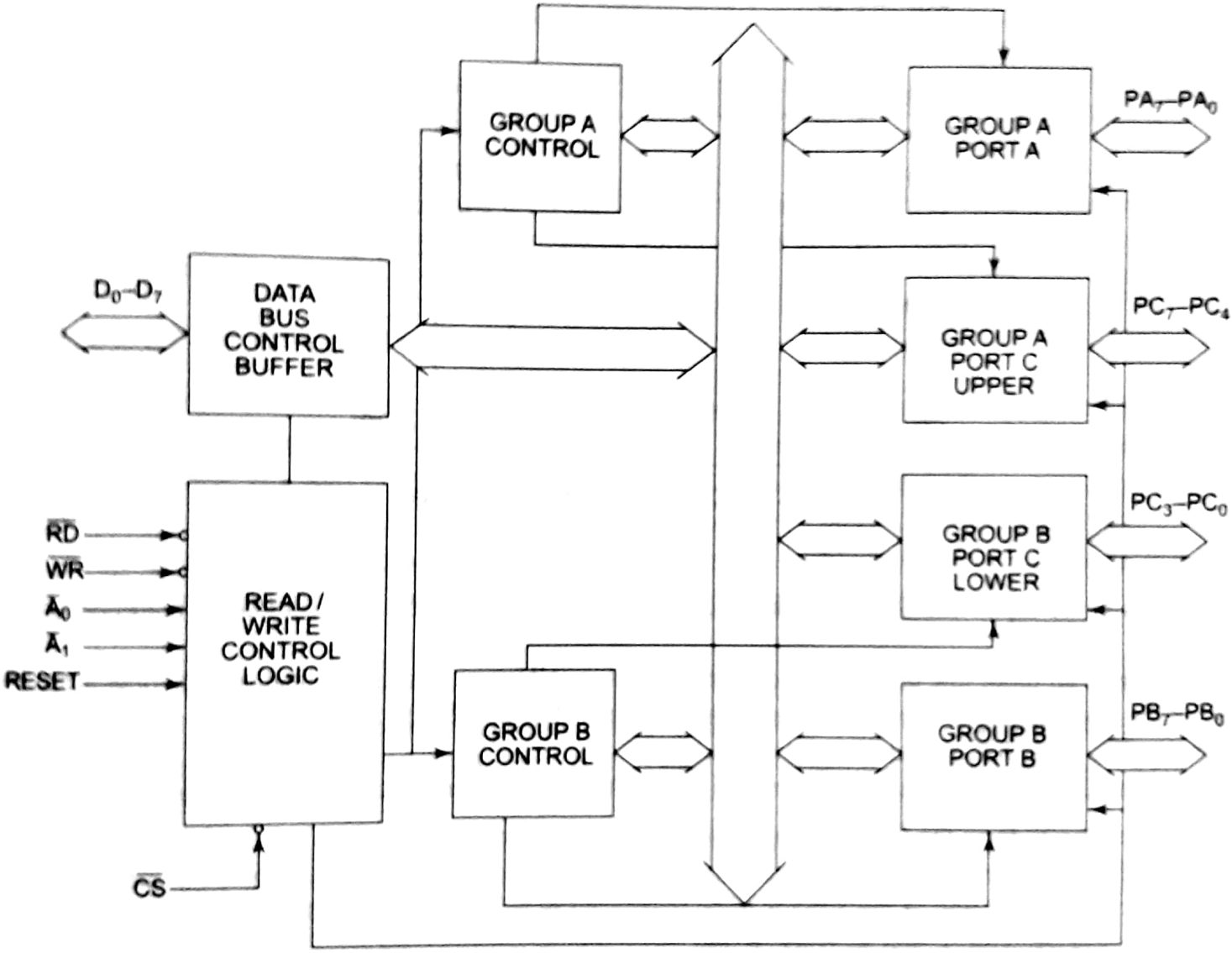

Fig. 5.17(a) *8255 Internal Architecture*

Scanned with CamScanner

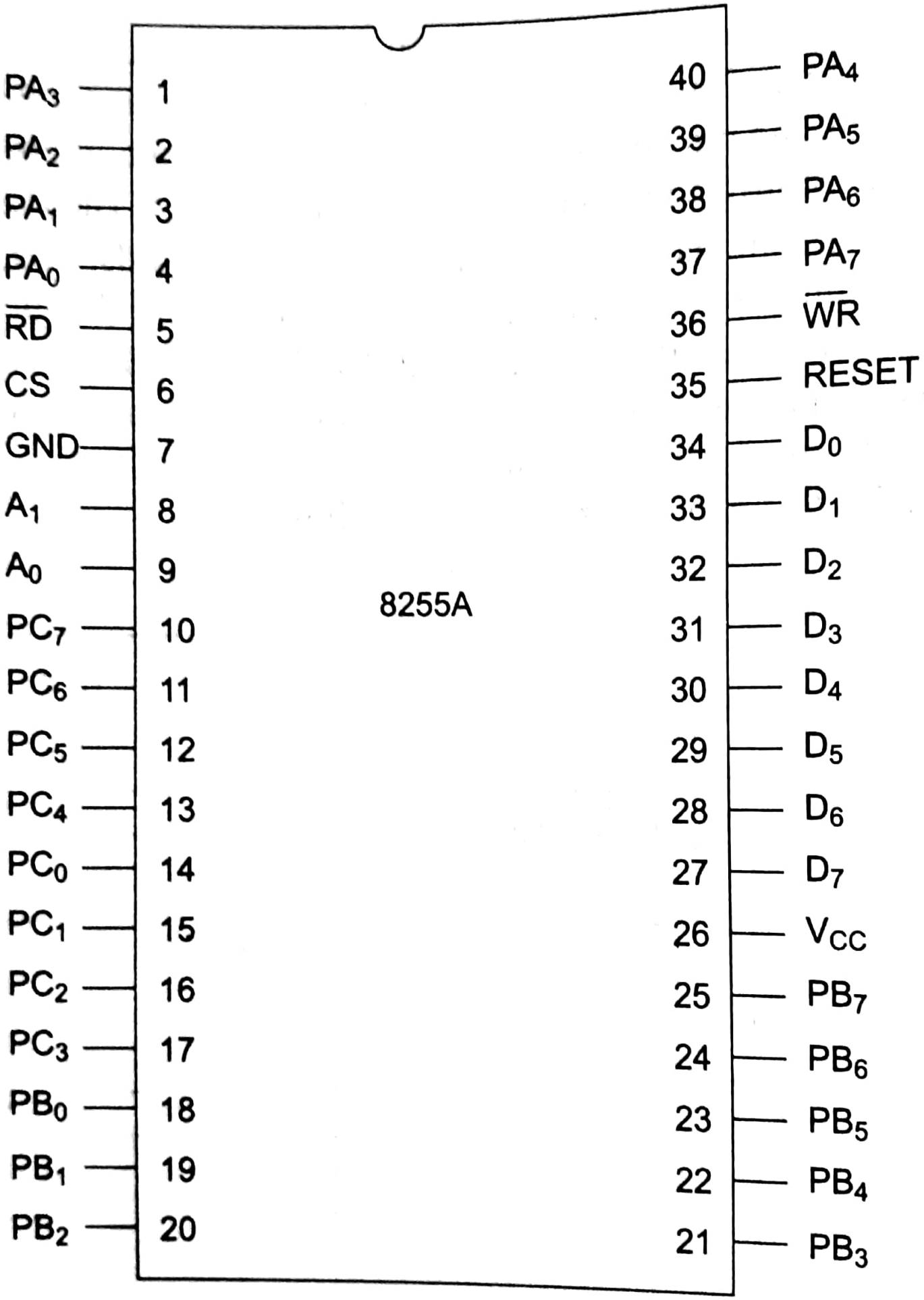

Fig. 5.17(b) *8255A Pin Configuration*

Scanned with CamScanner

→ Port C upper and Port C lower can also be used in combination as an 8 bit port C.

Both the port C's are assigned same address

→ Thus we have three 8 bit I/O ports, or two 8 bit and two 4 bit I/O ports from 8255.

→ All the ports can function independently as input or output ports.

→ This can be achieved by programming the bits of an internal register of 8255 known as the control word register (CWR).

Scanned with CamScanner

PA_7–PA_0 These are eight port A lines that act as either latched output or buffered input lines depending upon the control word loaded into the control word register.

PC_7–PC_4 Upper nibble of port C lines. They may act as either output latches or input buffers lines. This port also can be used for generation of handshake lines in mode1 or mode 2.

PC_3–PC_0 These are the lower port C lines, other details are the same as PC_7–PC_4 lines.

PB_0–PB_7 These are the eight port B lines which are used as latched output lines or buffered input lines in the same way as port A.

Scanned with CamScanner

$\overline{RD}$ This is the input line driven by the microprocessor and should be low to indicate read operation to 8255.

$\overline{WR}$ This is an input line driven by the microprocessor. A low on this line indicates write operation.

$\overline{CS}$ This is a chip select line. If this line goes low, it enables the 8255 to respond to $\overline{RD}$ and $\overline{WR}$ signals, otherwise $\overline{RD}$ and $\overline{WR}$ signals are neglected.

A_1–A_0 These are the address input lines and are driven by the microprocessor. These lines ($A_1 - A_0$) with $\overline{RD}$, $\overline{WR}$ and $\overline{CS}$ form the following operations for 8255. These address lines are used for addressing any one of the four registers, i.e. three ports and a control word register as given in Tables 5.9 (a), (b) and (c).

In case of 8086 systems, if the 8255 is to be interfaced with lower order data bus, the A_0 and A_1 pins of 8255 are connected with A_1 and A_2 respectively.

Scanned with CamScanner

Table 5.9(a)

$\overline{RD}$	$\overline{WR}$	$\overline{CS}$	A_1	A_0	*Input (Read) cycle*
0	1	0	0	0	Port A to data bus
0	1	0	0	1	Port B to data bus
0	1	0	1	0	Port C to data bus
0	1	0	1	1	CWR to data bus

Scanned with CamScanner

Table 5.9 (b)

$\overline{RD}$	$\overline{WR}$	$\overline{CS}$	A_1	A_0	*Output (Write) cycle*
1	0	0	0	0	Data bus to Port A
1	0	0	0	1	Data bus to Port B
1	0	0	1	0	Data bus to Port C
1	0	0	1	1	Data bus to CWR

Table 5.9 (c)

$\overline{RD}$	$\overline{WR}$	$\overline{CS}$	A_1	A_0	*Function*
X	X	1	X	X	Data bus tristated
1	1	0	X	X	Data bus tristated

Scanned with CamScanner

Modes of Operation of 8255:

Two basic modes of operation possible

① I/O mode.

② Bit-Set Reset mode (BSR).

In I/O mode, the 8255 ports work as programmable I/O ports.

In BSR mode only port C ($PC_0 - PC_7$) can be used to set or reset its individual port bits.

Under I/O mode of operation, there are three modes of operation of 8255 to support different applications. known as mode 0, mode 1 and mode 2.

Scanned with CamScanner

BSR Mode :

→ In this mode, any of the 8 bits of Port C can be set or reset depending on the B_0 bit of the control word.

→ The bit to be set or reset is selected by the bit select flags B_3, B_2, B_1 of CWR.

Scanned with CamScanner

Table 5.10

B_3	B_2	B_1	*Selected Bits of port C*
0	0	0	B_0
0	0	1	B_1
0	1	0	B_2
0	1	1	B_3
1	0	0	B_4
1	0	1	B_5
1	1	0	B_6
1	1	1	B_7

Scanned with CamScanner

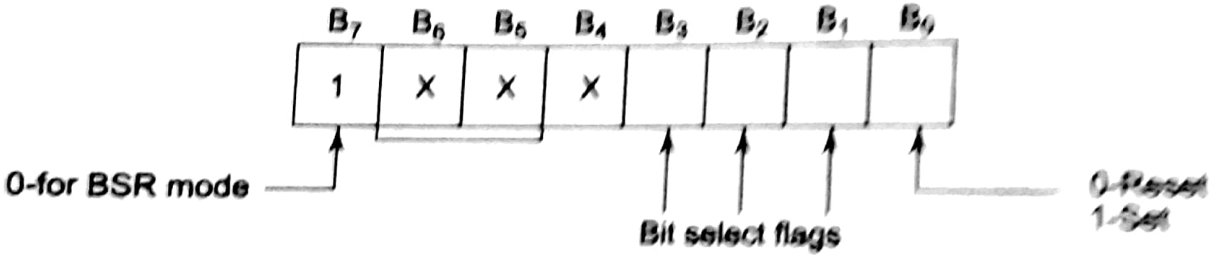

B_3, B_2, B_1, are from 000 to 111 for bits PC_0 to PC_7

Fig. 5.18(a) ***BSR Mode Control Word Register Format***

Scanned with CamScanner

I/O modes :

① Mode 0 (Basic I/O mode) :

This mode is also known as basic input/output mode. This mode provides a simple input and output capability using each of the three ports.

Data can be read from and written to the input and output ports respectively after appropriate initialization.

Scanned with CamScanner

The salient features of this mode are as listed below:

(i) Two 8-bit ports (port A and port B) and two 4-bit ports (port C upper and lower) are available. The two 4-bit ports can be combinedly used as a third 8-bit port.
(ii) Any port can be used as an input or output port.
(iii) Output ports are latched. Input ports are not latched.
(iv) A maximum of four ports are available so that overall 16 I/O configurations are possible.

All these modes can be selected by programming a register internal to 8255, known as Control Word Register (CWR) which has two formats. The first format is valid for I/O modes of operation, i.e. modes 0, mode 1 and mode 2 while the second format is valid for bit set/reset (BSR) mode of operation. This format is shown in Fig. 5.18(b).

Scanned with CamScanner

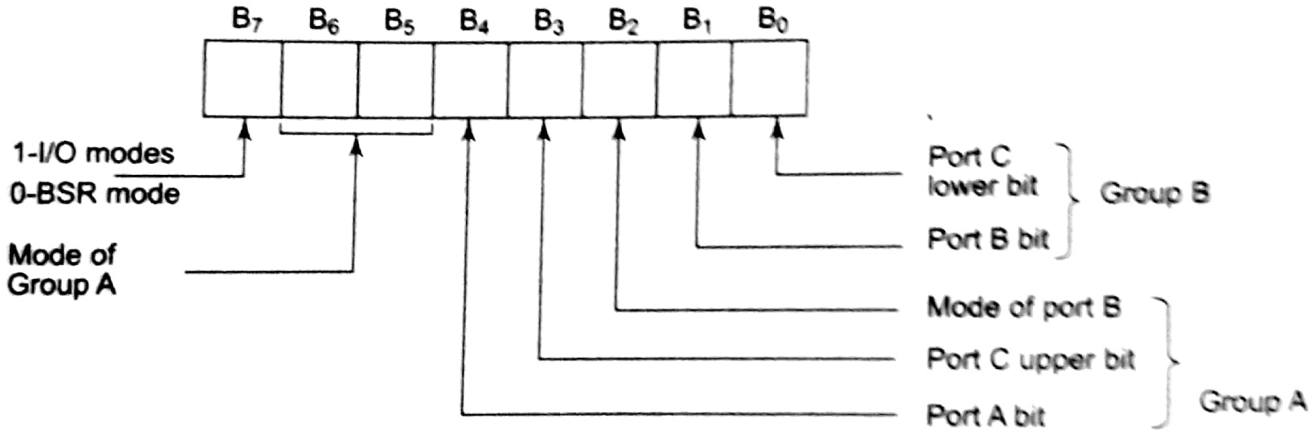

Group A modes

B_6	B_5	Mode
0	0	mode 0
0	1	mode 1
1	0	mode 2
1	1	x

(i) Port B mode is either 0 or 1 depending upon B2 bit.

(ii) A port is an output port if the port bit is 0 else it is input port

Fig. 5.18(b) *I/O Mode Control Word Register Format*

Scanned with CamScanner

Problems based on mode 0 of I/O modes

① Interface an 8255 with 8086 to work as an I/O port. Initialize port A as output port, port B as input port and port C as output port.

Port A address should be 0740H.

Write a program to sense switch positions $SW_0 - SW_7$ connected at port B. The sensed pattern is to be displayed on port A, to which 8 LED are connected, while port C lower displays the number of on switches out of the total eight switches.

Scanned with CamScanner

word is decided upon as follows

B7	B_6	B_5	B_4	B_3	B_2	B_1	B_0	Control word
1	0	0	0	0	0	1	0	= 82H
I/O mode	Port A in mode 0		Port A,o/p	Port C,o/p	Port B,mode 0	Port B,i/p	Port C,o/p	

Scanned with CamScanner

8255																	I/O Address lines	Hex. Port Addresses
Ports	A_{15}	A_{14}	A_{13}	A_{12}	A_{11}	A_{10}	A_{09}	A_{08}	A_{07}	A_{06}	A_{05}	A_{04}	A_{03}	A_{02}	A_{01}	A_{00}		
PortA	0	0	0	0	0	1	1	1	0	1	0	0	0	0	0	0		0740H
Port B	0	0	0	0	0	1	1	1	0	1	0	0	0	0	1	0		0742H
Port C	0	0	0	0	0	1	1	1	0	1	0	0	0	1	0	0		0744H
CWR	0	0	0	0	0	1	1	1	0	1	0	0	0	1	1	0		0746H

Scanned with CamScanner

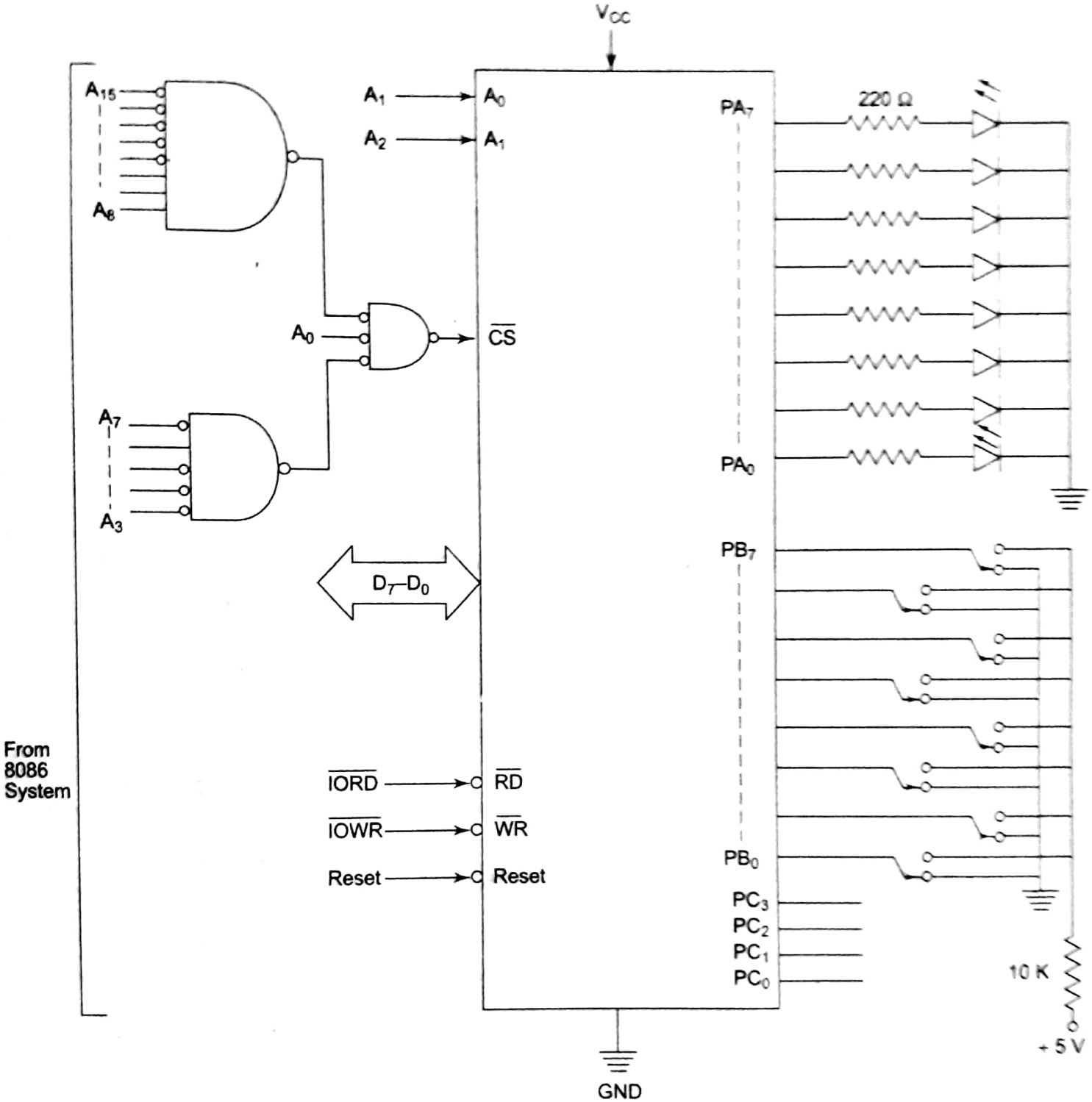

Fig. 5.19 *8255 Interfacing with 8086 for Problem 5.10*

Scanned with CamScanner

The ALP for the problem is developed as follows:

```
    MOV DX, 0746 H          ; Initialise CWR with
    MOV AL, 82 H            ; control word 82H
    OUT DX, AL              ;
    SUB DX,04               ; Get address of port B in DX
    IN AL, DX               ; Read port B for switch
    SUB DX,02               ; positions in to AL and get port A address
                            ; in DX.
    OUT DX, AL              ; Display switch positions on port A
    MOV BL, 00 H            ; Initialise BL for switch count
    MOV CH, 08H             ; Initialise CH for total switch number
YY: ROL AL                  ; Rotate AL through carry to check,
    JNC XX                  ; whether the switches are on or
    INC BL                  ; off, i.e. either 1 or 0
XX :DEC CH                  ; Check for next switch. If
    JNZ YY                  ; all switch are checked, the
    MOV AL, BL              ; number of on switches are
    ADD DX, 04              ; in BL.Display it on port C
    OUT DX,AL               ; lower.
    HLT                     ; Stop
```

Program 5.5 *ALP for Problem 5.10*

Scanned with CamScanner