BEND LOCATION INFO				CORRESPONDING BEND MACHINE INFO				
LOC NUM	LOC X	LOC Y	LOC Z	OFFSET	TWIST	RADIUS	ANGLE	REF MACH NUM
1	.00	.00	.00					
2	.00	1547.11	.00	1470.91		76.20	90.00	1
3	498.64	1547.11	.00	422.44				2

BILL OF MATERIALS

ITEM	QTY	DESCRIPTION	MATERIAL	RELEASE	REV	PART NUMBER
1	1	BOSS; -4 FNPT,BLK IRN OR STEEL	----------	----------	---	26972-04
2	1	TUBE; 16 GA. ASTM A787, TYPE 1	ASTM A787, TYPE 1	21006	0	A066D917-1

REV	REL NO	REVISION	DWN	CKD	APVD	DATE
00	21006	INITIAL RELEASE	SPT	AR	AR	22FEB21

1. TUBE I.D. MUST BE CLEAN OF ALL DEBRIS. REMOVE ALL WELD SPATTER AND SLAG.
2. TUBE ENDS TO BE CAPPED. CAPS MUST SEAL THE TUBE I.D. AND REMAIN IN PLACE DURING NORMAL SHIPPING AND HANDLING.
3. END CAPS TO BE REMOVED AT ASSEMBLY ONLY.
4. DEBUR & BREAK ALL SHARP CORNERS.
5. FINISH WELDS WITH ALUMINIZED PAINT.
6. ITEM #2 IS DETAILED WITHIN THE ASSEMBLY. THERE IS NO SEPARATE DRAWING OR DETAIL.

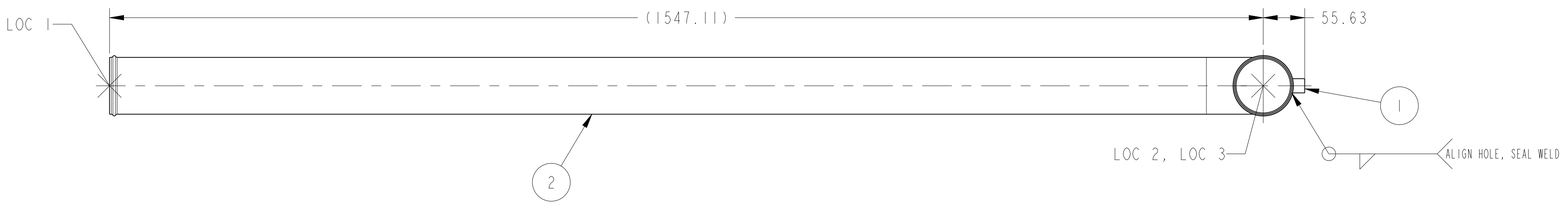

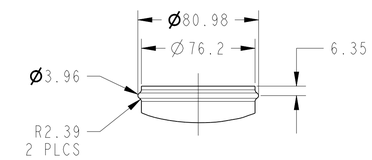

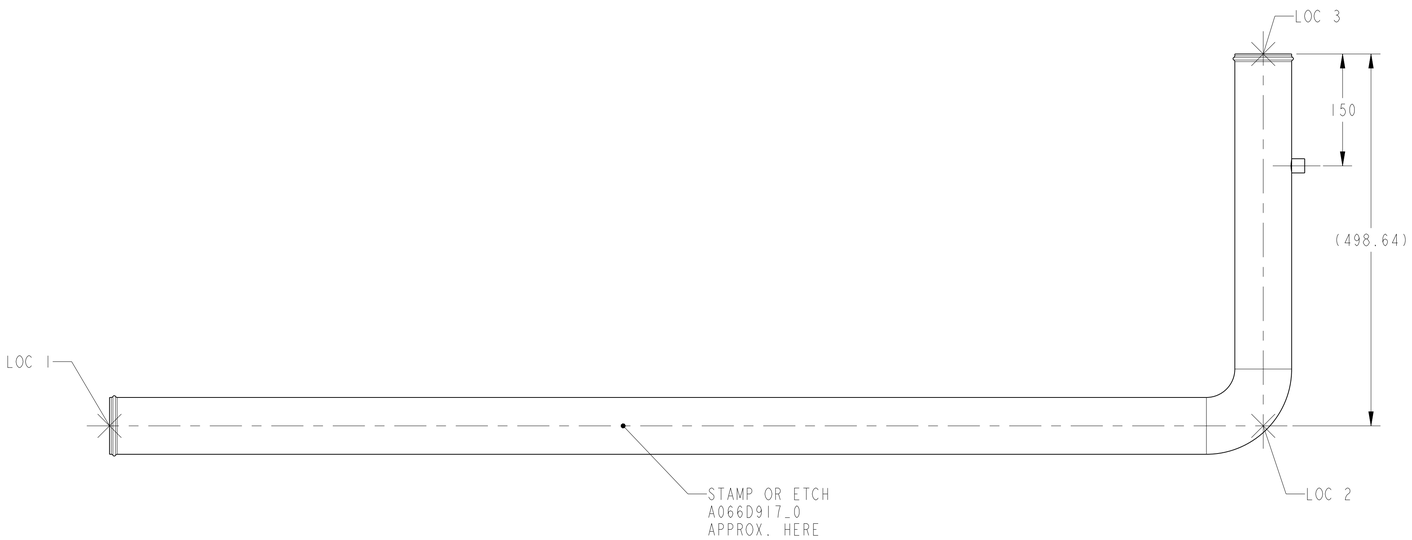

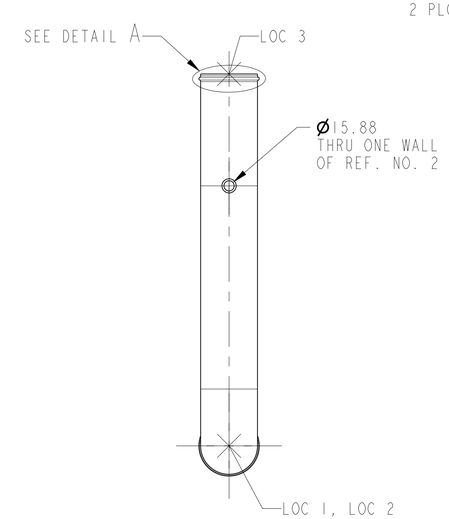

DETAIL A
AT BOTH ENDS
SCALE .500

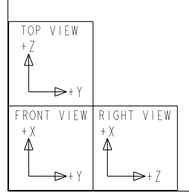

DIMENSIONS ARE IN: MILLIMETERS
[ ] ARE IN:
DRAWING TOLERANCES APPLY TO PRIMARY DIMENSIONS UNLESS OTHERWISE SPECIFIED
X: ± 1 IN OR 4 mm
X.X: ± .1 IN OR 0.7 mm
X.XX: ± .030 IN OR 0.25 mm
X.XXX: ± .010 IN OR 0.015 mm
ANGULAR TOLERANCE: ± 1°

THIS DOCUMENT AND THE INFORMATION SHOWN THEREON, IS CONFIDENTIAL AND PROPRIETARY AND SHALL NOT BE DISCLOSED TO OTHERS IN HARD COPY OR ELECTRONIC FORM, REPRODUCED BY ANY MEANS, OR USED FOR ANY PURPOSE WITHOUT WRITTEN CONSENT OF CUMMINS INC.

DO NOT SCALE PRINT
SCALE .250

CMI DATA CLASSIFICATION
Cummins Restricted Confidential

DWN S.TALASKAR
CKD A.RAAVI
APVD A.RAAVI
DATE 22FEB21

FOR INTERPRETATION OF DIMENSIONING AND TOLERANCING, SEE ASME Y14.5-2009

MUST CONFORM TO CES 10903

Cummins Inc.

ITEM NAME
TUBE,WATER TRANSFER
LTA ENGINE OUT

CAD SIZE	CAD SHEET	ITEM NUMBER	REV
D	1 OF 1	A066D917	0