ORCA: Steerable Observability for Bulk-Synchronous Parallel Applications

Ankush Jain (CMU), Sheng Jiang (CMU), Chuck Cranor (CMU), Qing Zheng (LANL), Brian Atkinson (LANL), George Amvrosiadis (CMU), Gary Grider (LANL)

Carnegie Mellon University

BSP Workloads Need Real-Time Observability

Problem: BSP efficiency bottlenecks are primarily a diagnostic challenge
- BSP: Bulk-Synchronous Parallel, critical paradigm in HPC/ML
- Large jobs with O(10K) nodes, long-running (weeks), lockstep execution
- Uniquely fragile: single straggler blocks all workers
- Diverse root causes: fail-slow hardware, tuning artifacts, load imbalance
- Our experience: diagnosis takes months, mitigations take days

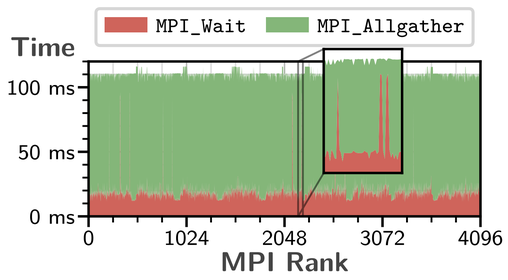

Fig 1. A BSP pathology at 4096 ranks, with MPI_Wait spikes blocking all ranks. Attribution requires joining fine-grained per-timestep telemetry.

Bottleneck: post-hoc tracing workflows delay intervention
- Tracing: fine-grained telemetry emitted as per-rank logs
- Large datasets analyzed offline → delayed intervention
- Telemetry volume + structure → analytics bottleneck

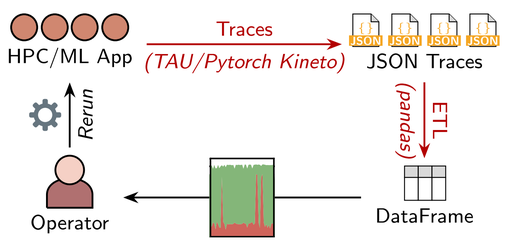

Fig 2. Post-hoc trace analysis workflows produce large datasets, creating ETL (extract, transform, load) bottlenecks. Moreover, paradigm intrinsically precludes online intervention.

Steerable Observability: Real-time Feedback and Control

Our Goal: always-on BSP-aware observability — lightweight metrics by default, with on-demand escalation and runtime intervention.

Existing approaches and limitations:
- **Monitoring** (Prometheus, LDMS): no workload context
- **Tracing** (TAU, Score-P, Kineto): post-hoc; volume delays feedback
- **Event Streaming** (Flink, Kafka): no BSP-aligned collection or control

ORCA: Observability with Realtime Control and Aggregation
- Coordinated collection of BSP-aligned telemetry as timestep dataframes
- In-situ reductions to materialize views directly from applications
- Control plane: asynchronous, atomic, timestep-consistent

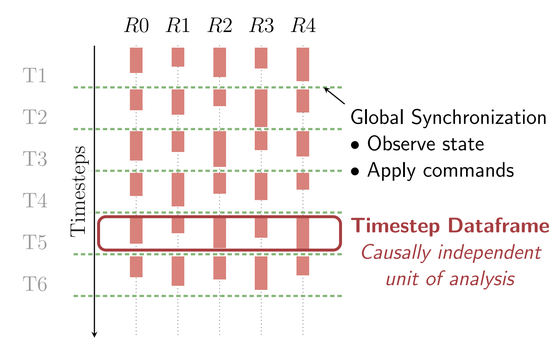

Fig 3. A logical view of BSP execution. Global synchronization provides natural points for observations and control.

Architecture: Tree-based Overlay, Columnar In-situ Analytics, Timestep-Consistent Control

Transport: Incast-Optimized, On-Fabric, Receiver-Driven
- Timestep dataframes: typed Arrow streams, flushed every timestep
- Aggregators retrieve asynchronously via RDMA GETs

In-Situ Analytics: Columnar, Tiered Query Planning
- OrcaFlow: SQL-based analytics en route to sinks
- DataFusion-based planner compiles to tier plans
- Sinks: DuckDB (real-time), timestep-partitioned Parquet (offline)

Control Plane: Timestep-Aligned Two-Phase Commit (TS2PC)
- Controller proposes commands for future timestep $T_{cmd} = T_{app} + \Delta$
- Commands committed only if no rank has passed T_{cmd}
- Δ learned automatically: initialized to 0, incremented on abort

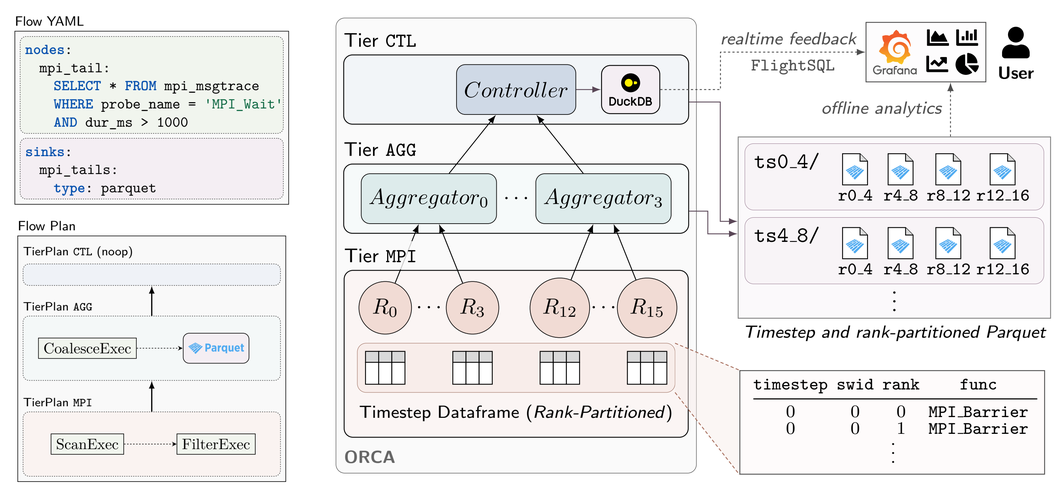

Fig 4. (Left) OrcaFlow compiles SQL into tier plans with operator pushdown. (Right) ORCA architecture: three-tier tree-based overlay with dedicated controller and aggregators. Data starts as timestep dataframes, analyzed en route to DuckDB and Parquet sinks.

Tracing: Lower Overhead, Smaller Traces, Faster Queries

Workload: AMR code at 512–4096 CPU ranks (1 core/rank)
- AMR: Adaptive Mesh Refinement, highly dynamic simulations
- **0.8–2%** runtime overhead vs. 56–81% for existing tracing tools
- **3.6–44**× smaller traces via Parquet columnar layout
- **3–4 orders of magnitude** faster post-mortem queries (zero-ETL)

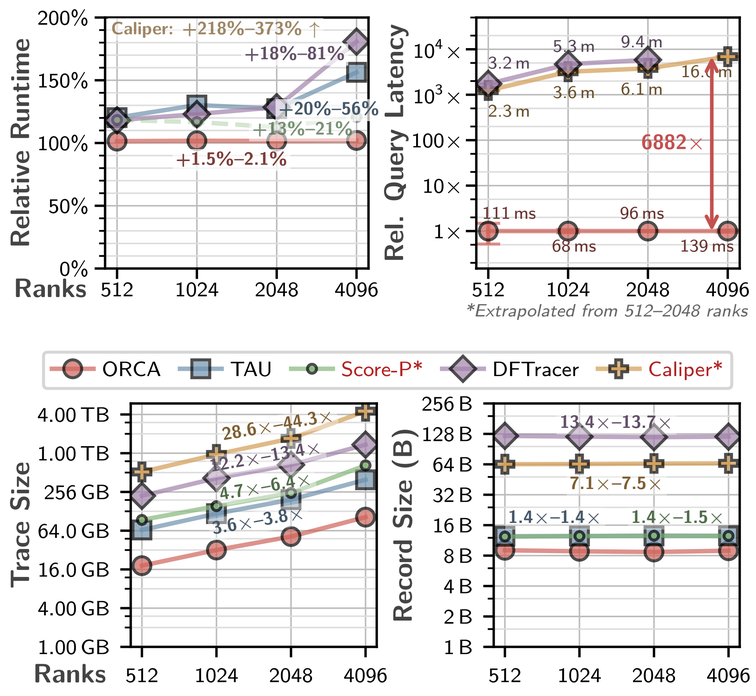

Fig 5. Runtime overhead (top left), query latency (top right), and trace sizes (bottom) for ORCA vs. HPC tracing tools.

Closed-Loop Evaluation: LLM-driven Agentic Debugging

- Workload: AMR code at 4096 ranks, anomaly from Fig. 1 reproduced
- LLM agent (Claude Opus 4.5) asked to localize using ORCA
- Agent progressively localizes: collectives → Kokkos → `MPI_Wait`
- Completes in 27 minutes (vs. months manually) with minimal intervention
- Baseline monitoring collects 144× less data vs. detailed tracing

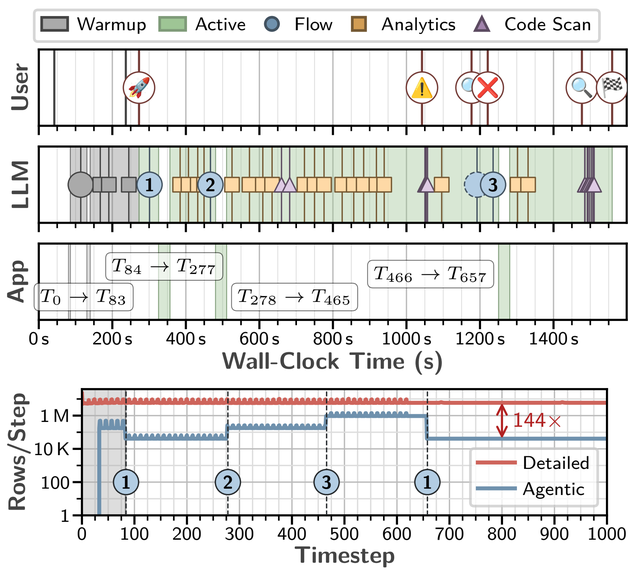

Fig 6. Visual transcript of the debugging session. Per-timestep data volume (bottom) shows targeted collection and 144× reduction on revert to baseline.