Politecnico di Torino

MissionOnMars

Team Name: D.R.I.V.E

Anna Roma - Team Leader
Stefano Giulianelli
Letizia D’Angelo
Kevin Stamenkovski

The Challenge

We are an engineer stationed on Mars and have a rather urgent design task ahead. A rogue meteor has rendered the original solar array inoperative.

The microgrid system now has only battery power and time is running short. You must design a new microgrid system providing **uninterrupted power over a seven sol period**.

Voltage must be kept between **500V and 520V** to protect sensitive life-support equipment. You have only a few Earth hours.

Mission Duration

7 Sols (1 Sol = 24h 37m)

Voltage Bounds

500V - 520V

Smart Parameter Optimization

Automated **parallel simulations** to explore multiple parameter configurations.

MATLAB: run_multiple_simulation

- Test different control parameters simultaneously
- Identify optimal configurations efficiently

Simulink Multiple Simulations

- Validated best candidates from MATLAB
- Compared system performance across scenarios

Faster Tuning
Accelerated parameter refining

Data-Driven Selection
Objective setup optimization

Improved Stability
Enhanced system reliability

Developed a custom MATLAB script using **Codex**.

Task 1 Solution

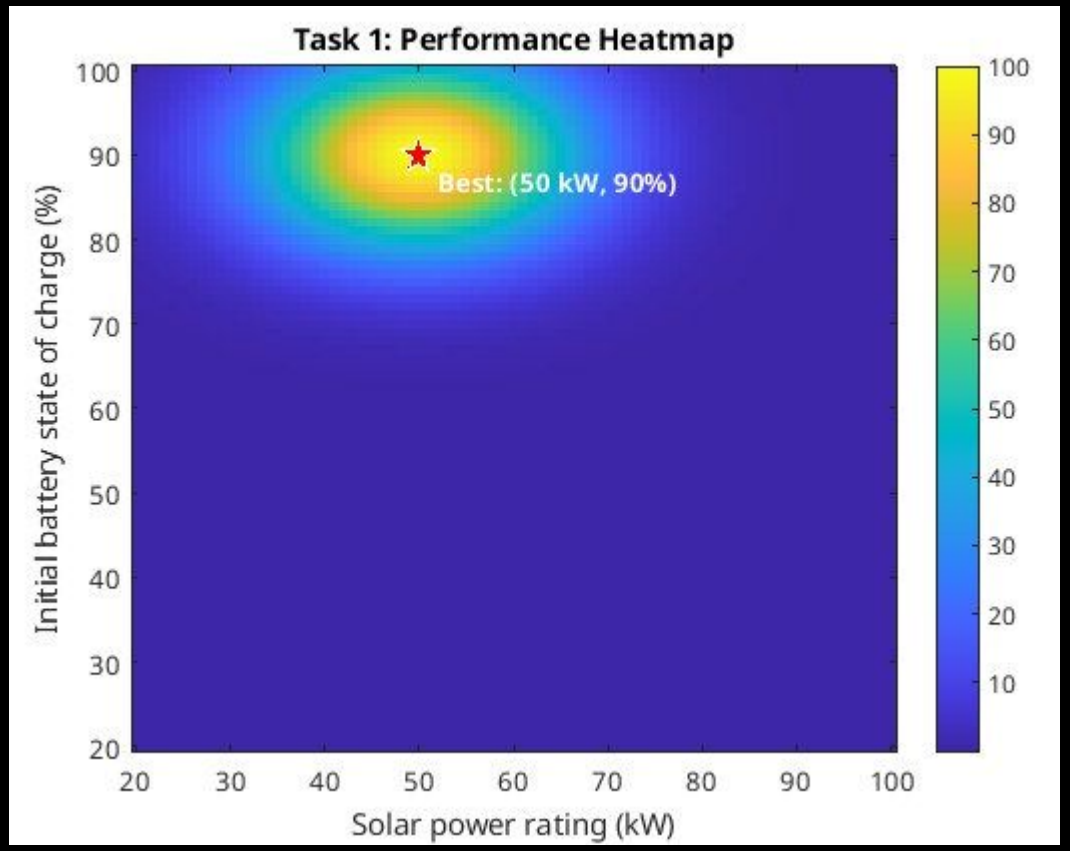

Optimal configuration identified through parallel simulations.

Best performance achieved at **50 kW solar power & 90% initial battery state**
Ensures maximum efficiency and stable operation

Final Values: solar_power=50, battery=90

Task 2 Solution

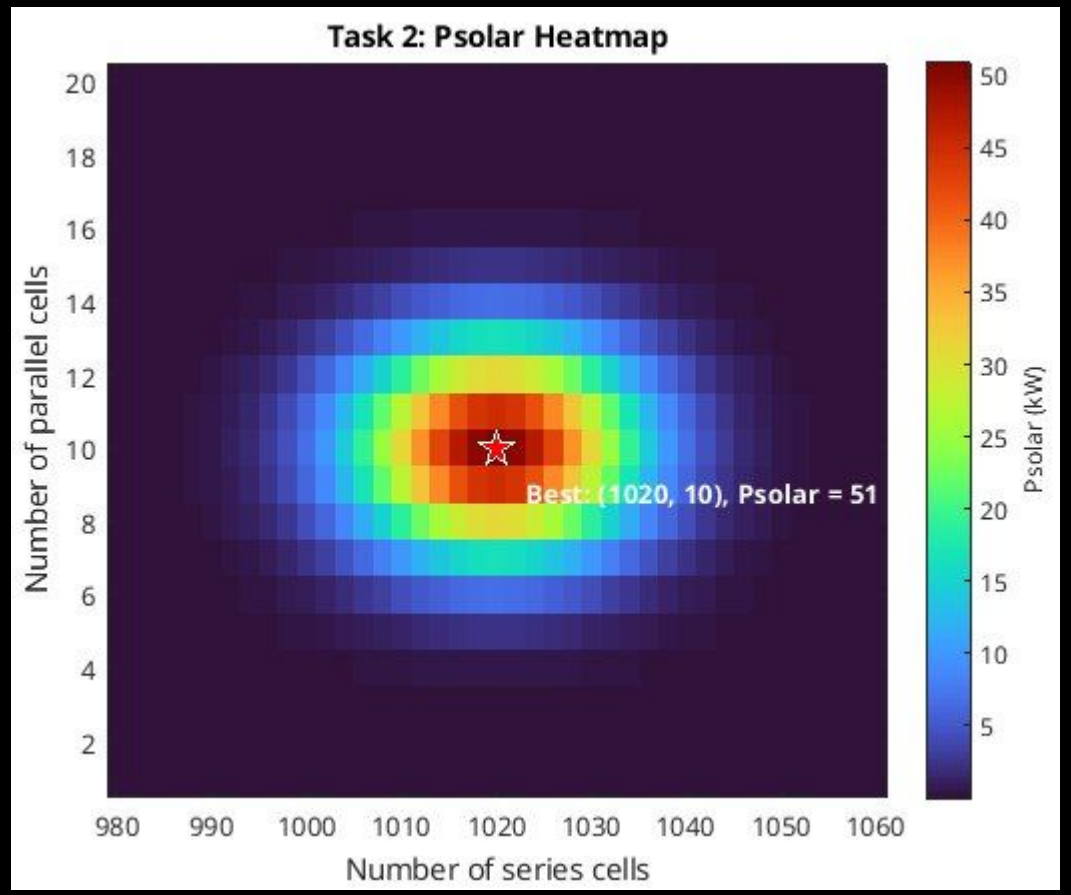

Parallel simulations used to optimize PV array configuration (series & parallel cells).
We dentified optimal setup: **1020 series, 10 parallel → ~51 kW maximum power**

Final Values: 1020, 10

Task 3 Solution

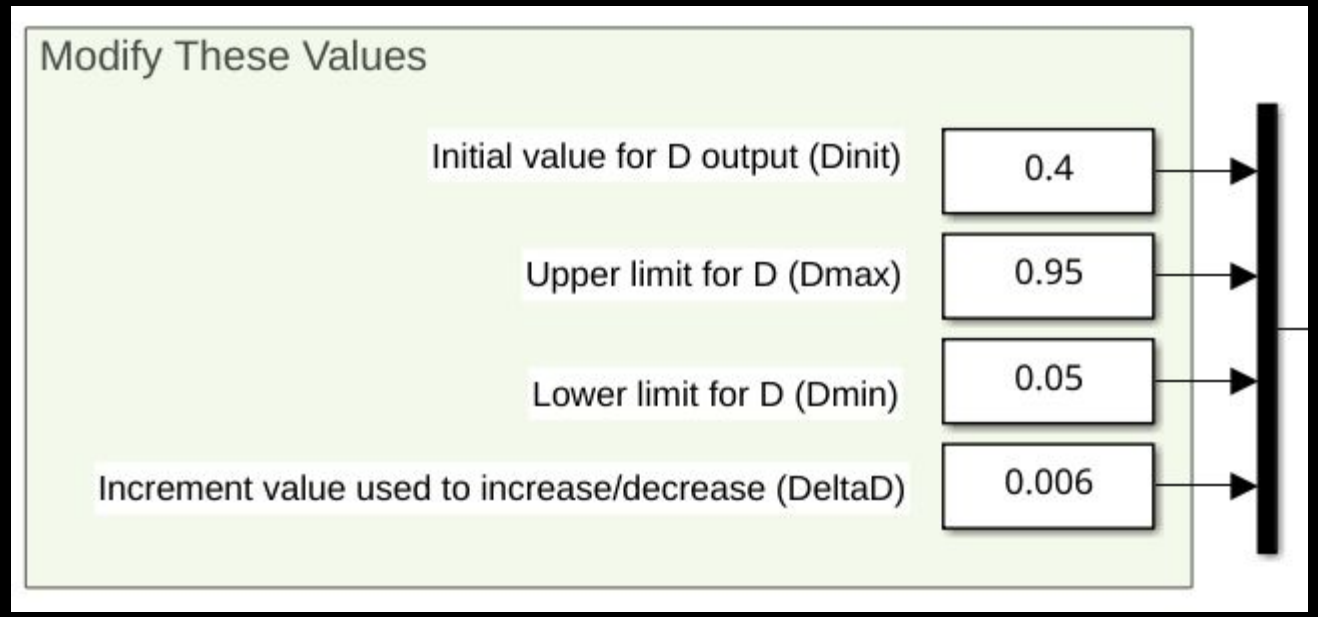

Parameters optimized MPPT Controller by empirical parallel simulations

Task 4 Solution

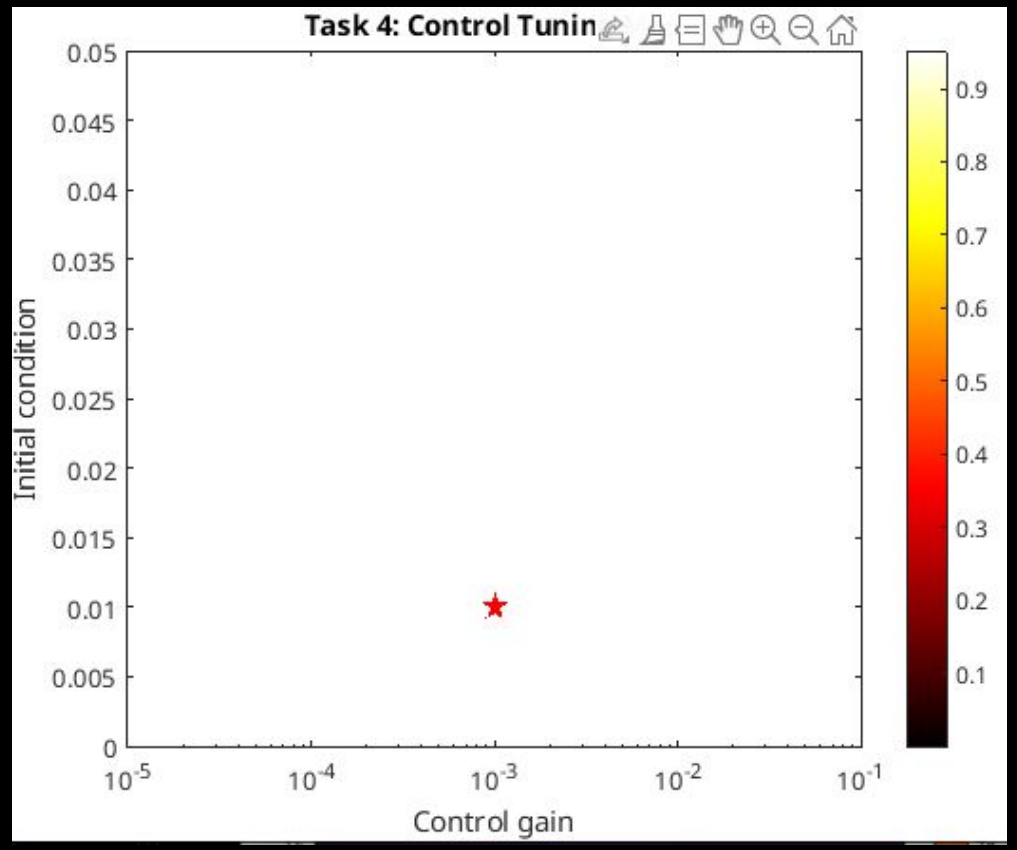

A feedback voltage control system was implemented to regulate the load voltage within **500–520 V**. The load voltage is measured and compared to a reference setpoint of **510 V**, and the resulting error is fed into a **discrete-time integrator controller**. The controller output adjusts the **duty cycle** of the DC-DC converter, which controls the power delivered from the battery to the load.

Final Values: 1e-3, 0.01

Task 5 Solution

We implemented the Controller developed in task4 and the Volt-meter reading as feedback

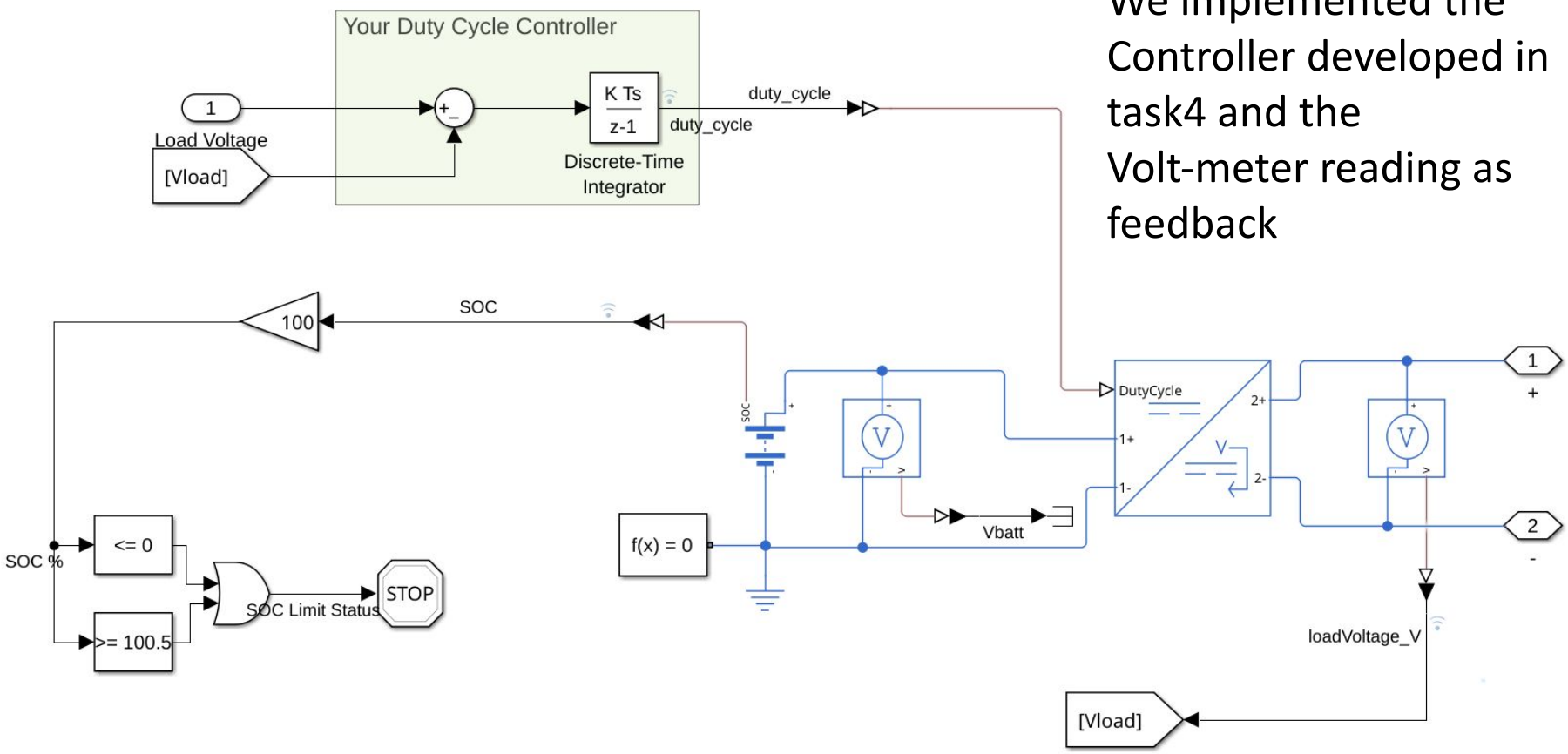

Task 5 Solution

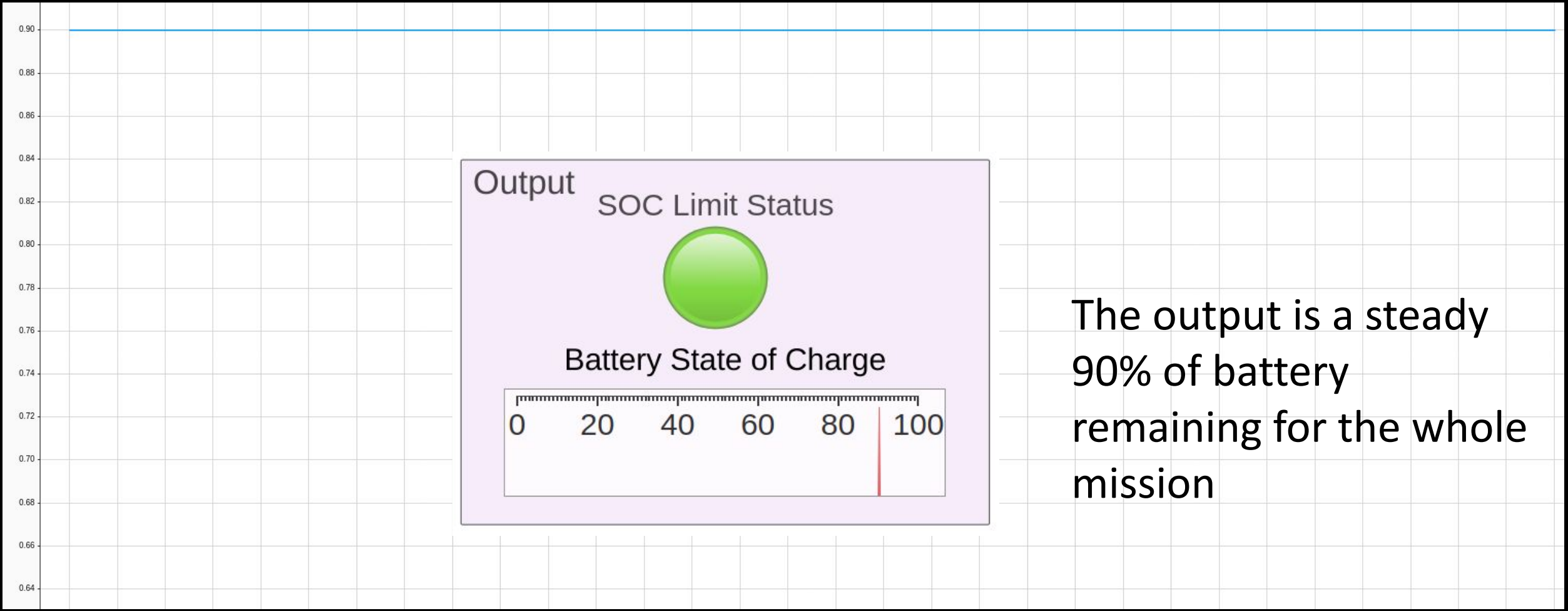

The output is a steady 90% of battery remaining for the whole mission

Politecnico di Torino

Thank You!

We had a lot of fun! 🎉