Electrocardiogram Measurement System Design Lab[1]

2.75/6.525/2.750/6.025 Design of Medical Devices
Fall 2018 Bldg 38-601

Important: you must read and electronically sign the electrical safety form BEFORE you start Part II of the lab.

You need a laptop that has Matlab installed for this lab. Let Jason or Gim know if you have any issues.

This lab requires some basic knowledge of operational amplifiers (op-amps). If you have not learned about op-amps before, or would like a refresher, please consult the 6.01 notes sections 6.6.1 and 6.6.2.

Lab hours will be announced in class and over email.

Purpose and Lab Overview

The purpose of this lab is to learn about what the electrocardiogram (ECG) is and where it comes from, design and build an electrical circuit to measure your own ECG, and analyze the resulting data. There are two parts to this lab. For part I, you will read about ECG and ECG instrumentation basics and answer a few short questions. You will also design a preliminary ECG circuit. In part II, you'll build the ECG circuit you designed in part I, save a measurement of your ECG, and analyze it in Matlab.

Part I (ECG Proposal) will be **due October 3**. Part II (ECG Writeup) will be **due October 24.**

Part I: ECG Intro and Analog ECG

For part I of the lab, you will read about the ECG signal and instrumentation (Part I-A) and design a simple ECG circuit (Part I-B). You will answer questions for each part. Answers to Parts I-A and I-B should be uploaded to the wiki together in one document by the due date.

Part I-A: ECG Intro

The electrocardiogram (abbreviated as ECG or sometimes EKG) is a skin surface measurement of the electrical activity of the heart over time. Doctors use ECGs to detect and diagnose conditions such as arrhythmias (abnormal heart rhythms) and myocardial infarctions (heart attacks). It has become a routine part of any complete medical evaluation and has been used as a diagnostic test for over 70 years.

An ECG detects the movement of ions through heart muscle known as the myocardium, which changes with each cardiac cycle (see Figure 1). The atria depolarize first, which results in the first small hump of the ECG known as the P wave. The ventricles depolarize next, which results in the QRS complex. Finally, the ventricles repolarize, resulting in the T wave. The spaces between the waves also have physiological significance. The time between the P and R waves (the

[1] Acknowledgement: Maggie Delano, MIT PhD 2018

P-R interval) indicates how much time there is between the atria depolarizing and the ventricles depolarizing. A long P-R interval could be indicative of a conduction delay between the atria and ventricles known as heart block. The S-T segment is at an “isoelectric” voltage (i.e. 0 mV). Elevations and depressions of the S-T segment may be indicative of a conduction abnormality or loss of blood to the heart.

Each cardiac cycle repeats itself about once a second and a normal resting heart rate is 60-100 beats per minute. The heart rate can be represented in beats per minute (bpm) as an average number of beats over several beats, or as an “instantaneous” heart rate, which is calculated in bpm as $1/t_{RR} * 60$, where t_{RR} is the time between R peaks known as the R-R interval. Heart rate variability (HRV), or the variability of the R-R interval, can be calculated in a number of ways, but is often calculated as the standard deviation of the R-R intervals in a given time period. HRV is related to the relative activation of the sympathetic and parasympathetic nervous systems and changes in HRV are associated with changes in cardiovascular health such as increased fluid retention in patients with congestive heart failure.

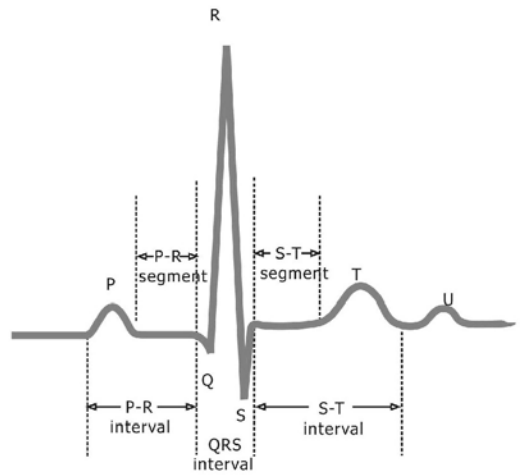

Figure 1: An example ECG waveform.

Electrodes are placed on the body for different “views” of the heart known as ECG leads. An ECG “lead” is the projection of the ion movement vector in a particular direction at the surface of the skin. Each ECG lead is a differential measurement, or a measurement between two points on the skin. A standard clinical ECG includes 12 different leads or projections. For this lab, we’ll focus on leads I, II and III (see Figure 2). They form a triangle known as “Einthoven’s Triangle” and involve different combinations of electrodes placed on the Right Arm (RA), left arm (LA), and left leg (LL). A reference electrode is placed on the right leg (RL) that relates the potentials of the body and the circuit to one another. For example, to measure a lead II ECG the voltage difference between the left leg (LL) and right arm (RA) electrodes is measured.

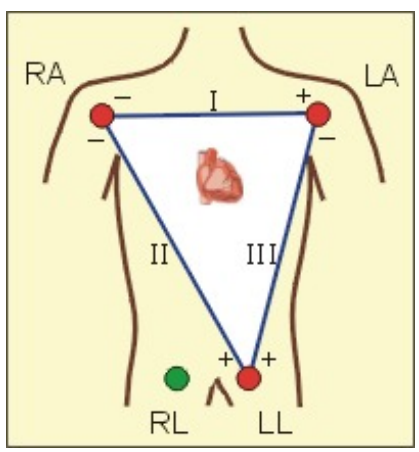

Figure 2: ECG leads I, II and III form a triangle made with electrodes placed on the left arm (LA), right arm (RA) and left leg (LL). The right leg (RL) electrode is used as a reference.

The ECG signal is a small voltage difference between two electrodes on the order of a few millivolts. An instrumentation amplifier (IA) can be used to take the difference between the voltages of two electrodes and gain up the resulting difference so it can be seen on an oscilloscope and sampled by an Analog-to-Digital converter (ADC). The INA114 or AD620 (devices are pin for pin equivalent) is made up of 3 op-amps: two op-amps at the inputs that buffer the input signals and a third op-amp that acts as a differential amplifier (see Figure 3). Because the IA has high input impedance like an op-amp, little current flows from the input voltages V_1 and V_2 and little voltage is dropped across its source resistance, so you can assume that it takes the difference between the voltages placed at its inputs.

The IA differs from a conventional op-amp circuit in that the measurement is differential and requires an external reference. To better understand these differences, let's start by examining a standard inverting op-amp circuit (see Figure 4). In this circuit, the difference between the positive and negative inputs is amplified and inverted. When operating with a dual-ended power supply (e.g. V+ = 5V, V- = -5V), V_{ref} is usually selected so that the signal is amplified "around" the middle of the voltage supply rails. For a dual-ended supply, this is zero and the transfer function of the circuit is $V_o/V_i = -R_f/R_i$. When operating from a single power supply such as a 9V battery, V_{ref} is set to 4.5V. This can be achieved by voltage divider with two resistors.

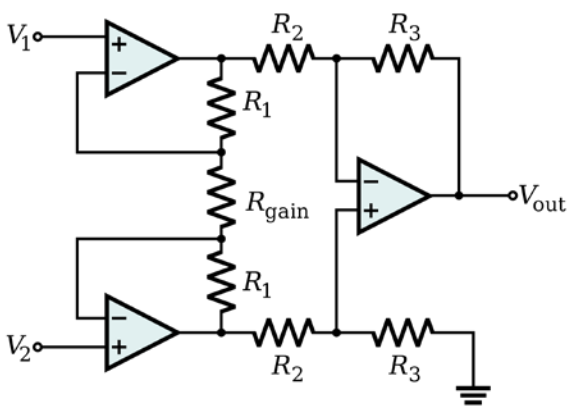

Figure 3: An inside look at an instrumentation amplifier.

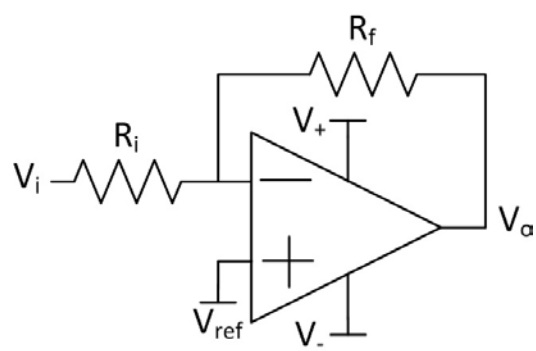

Figure 4: An op-amp in the inverting configuration.

1. What should V_{ref} be for a single ended supply (9V)?
2. Write the output voltage V_o in terms of V_{ref} , V_i, R_f and R_i.
3. Write V_o for a single-ended supply (e.g. 0-10V).

Now let's look at an instrumentation amplifier (see Figure 5). As with the inverting op-amp, the difference is taken between the voltages at the two inputs. However, rather than using the positive input as a reference, the signal is comprised of both inputs and the reference voltage must be set separately. Additionally, the difference between the inputs is "floating" - there are infinite combinations of V_1 and V_2 that could result in the same voltage difference. These voltages need to be referenced to the voltages in the amplifier, so an additional reference pin is included. Each

input is now referenced to this voltage V_{ref}. Additionally, for the largest voltage swing, the inputs should still be amplified "around" the middle of the voltage supply rails, as in the single ended case. Unlike the single-ended case, though, the difference between two input voltages is being measured, rather than the difference between a single input voltage and a reference voltage on the positive terminal. To ensure the largest voltage swing possible, a constraint is applied on the inputs such that they are equal and opposite with respect to a voltage known as the common-mode voltage (see Figure 6). For a dual-ended supply, V_{ref} and V_{cm} are set to zero and the output voltage of the amplifier is $V_o = G*(V_1 - V_2)$, where G is a gain set by the user (often via an external gain resistor).

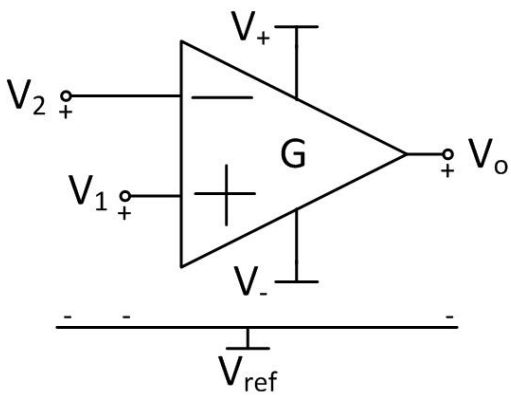

Figure 5: An instrumentation amplifier.

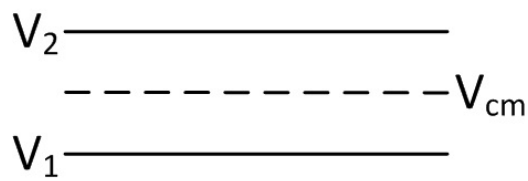

Figure 6: A differential voltage with the common mode voltage drawn.

4. What should V_{ref} be for a single ended supply?

5. Write the common mode voltage for a differential amplifier in terms of the input voltages, V_1 and V_2.

6. Write the output voltage V_o in terms of V_{ref} , V_1 and V_2.

7. Write the output voltage V_o for a single-ended supply. What should the common mode voltage of the input signals be? [You will be using a single ended power supply in part II]

Instrumentation amplifiers are also used to gain up the difference signal once it is measured. This is performed using an external gain resistor. The gain of the IA is inversely related to its bandwidth (see Figure 7). The gain of the IA should be set such that the signal is large enough to be viewed on the oscilloscope and sampled by the ADC, but small enough that it doesn't saturate the amplifier and remains within the voltage rails. It should also be low enough such that the bandwidth of the IA is still great enough for the application. Clinical applications using ECG require a bandwidth of at least 0.01 Hz to 100 Hz. Monitoring applications generally require a signal bandwidth of about 0.1 Hz to 50 Hz.

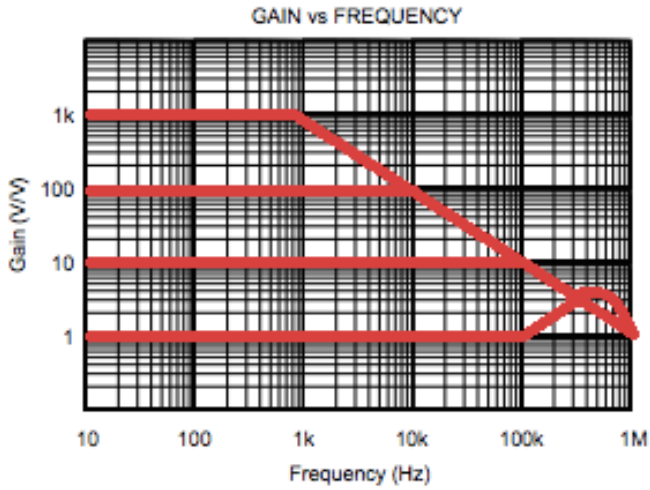

Figure 7: Gain versus frequency curve for the INA114.

After the signal has been amplified, it needs to be filtered. White noise at all frequencies and 60 Hz interference from power lines are present in the signal. A low-pass filter can be used to reduce white noise and 60 Hz interference. The cut-off frequency should be set to reduce as much noise and interference as possible while having a minimal impact on the frequency content in the signal bandwidth.

8. Suppose you have a signal with a bandwidth from DC to 1 kHz. White noise and 60 Hz interference are both present. Which kinds of filters can you use to reduce the noise/interference? What cutoff frequencies could you use?

9. Now suppose you have a signal with a bandwidth from DC to 10 Hz. Both white noise and 60 Hz interference are present. Which kinds of filters can you use to reduce the noise/interference? What cutoff frequencies could you use?

Part I-B: Designing an ECG measurement circuit

Now that you understand what an ECG is and how to measure it, it's time to design a simple ECG measurement circuit. There are three main aspects of the ECG measurement circuit to be designed: the skin-to-circuit interface, the amplifier circuit, and the filtering circuit. For your designs you can assume you have access to a 9V battery and resistors and capacitors of standard values.

Remember that ECG is an electrical measurement of heart activity at the surface of the skin.

Electrodes are used to convert the currents on the skin into voltages that can be sensed and amplified. For this lab, you will be acquiring a "lead I" ECG using an INA114 instrumentation amplifier. The third lead should be attached to a 4.5V reference created with resistor voltage divider. [Use two 10k resistors.] This is often referred to as a virtual ground. Assume that your ECG signal is 5 mV peak-to-peak and the bandwidth should be that typically used for monitoring applications. Use a low-pass filter to remove noise and interference in the signal and use the Agilent oscilloscope to sample and save your ECG waveform and data to a flash drive.

Part I-B: Questions

1. Where should the electrodes be connected on the body? How should each of them be connected to the circuit?

2. Draw a diagram of the INA114 pinout and include the connections for each pin. Configure the INA114 for a gain that will not saturate the amplifier or reduce the bandwidth below that which is needed. Be sure to include where the power supply is connected, the value of the gain resistor, and where each of the three electrodes connect to the INA114 or circuit.

3. Design a low-pass filter that removes noise and interference from the signal. Use standard resistor and capacitor values. Add the low-pass filter to your diagram of the INA114. Hint: consider the types of noise and interference present, along with the frequencies of the ECG signal when designing your low-pass filter.

Part I: Write up Submission

Upload the answers to Parts I-A and I-B in a single document to the course wiki by **October 3.** They will be graded ASAP; please wait from confirmation from the course staff that your design has been approved before starting Part II.

Part II: Analog and Digital ECG

Part II-A: Analog ECG

Important: you must read and electronically sign the electrical safety form BEFORE you start Part II of the lab.

You need a laptop that can run Matlab installed for this lab. Please install these on your laptop BEFORE coming to lab. Be sure to bring a flash drive.

Once your design from part I has been submitted and approved, it is time to build your circuit. You will need the following items:

1. Protoboard (Solderless) breadboard (1x)
2. Instrumentation Amplifier (INA114 or AD620, 1x)
3. Resistors and Capacitors (1x R for IA, 1x R, C for LPF)
4. Wire (enough to build your circuit)
5. Wire strippers (1x)
6. Electrodes (3x)

7. ECG lead cables (3x)
8. Laptop with Waveforms and Matlab installed (1x)

All materials can be picked up in the sixth floor 6.101 lab (38-601). Once you have gathered your parts, assemble the circuit you designed. This includes wiring up the instrumentation amplifier and low-pass filter, and connecting the electrodes to the circuit and the body. Be sure your wiring is correct before hooking up the battery or connecting the electrodes to yourself.

When connecting the electrodes, it is important to have good contact with the skin. For good signal quality (and your comfort!) place the electrodes in an area that is clean with little body hair. It's OK if the electrodes aren't exactly as shown in the lab above, so long as they are configured to provide a view of the heart parallel to the Lead I shown.

Attached the battery and connect the oscilloscope to the output of your circuit. Set the input to "AC Coupling". You should configure the scope's time axis and voltage axis so that you can see a few heart beats on the screen at a time. The oscilloscope is normally in continuous "RUN" mode acquiring data and updating the screen. Prior to taking screenshot or exporting data, set the scope in "SINGLE" acquisition mode. This stores one trace in memory. You can now export the data.

<u>Agilent Oscilloscope</u>
To take a screen shot or export a CSV file, press [Save/Recall] > Save > Format; then, turn the ENTER knob to select 8-bit Bitmap image (*.bmp), 24-bit Bitmap image (*.bmp), 24-bit image (*.png) or CSV data. Press the softkey in the second position and use the <u>Entry knob</u> to navigate to the save location (USB). Export the CSV data.

<u>Tektronix Oscilloscope</u>
Push the MENU button under SAVE/RECALL.
Push the Save Waveform screen button to save the waveform as a CSV file.
Select Spreadsheet File Format .
The default target file, TEK?????.CSV, is now automatically highlighted.
Push the Save To Selected File screen button to save the waveform.

Part II-A: Questions

1. How noisy is your waveform? How does it compare to the morphology of the waveform shown earlier in the lab?

2. Our filtering involved a single low-pass filter. Was this filter enough to reduce the noise and produce a relatively "clean" ECG? Did the filter impact the morphology of your ECG? Would you change your low-pass cutoff frequency? What other techniques could you use to improve your signal?

3. Try making two more low-pass filters. One should have a cutoff frequency 10 times lower than your original cutoff frequency, and one should have a cutoff frequency 10 times higher than your original cutoff frequency. What does your signal look like for each of these cutoff frequencies? How do they compare to the signal you saw with your original cutoff frequency?

4. What happens when you move around while measuring your ECG? What about if you

flex your muscles? Experiment with your circuit and describe your findings.

Part II-B: Digital ECG

Once you are comfortable experimenting with your ECG circuit in Part II-A, it's time to sample your ECG waveform and analyze it. You will then generate a R-R interval time series and calculate your instantaneous heart rate and heart rate variability with Matlab.

Run Matlab and hit the import data button. Select your .CSV file. Configure your imported data as column vectors and click Import selection. You should have two vectors called *second* and *Volt* in your work space. Plot your data.

```
plot(second,Volt) % plots the data
```

Most likely, your data will contain noise but you should be able to see your heart beat as shown below.

The trigger point for the sample is t=0. In this sample, data acquisition begins 3 seconds before the trigger point.

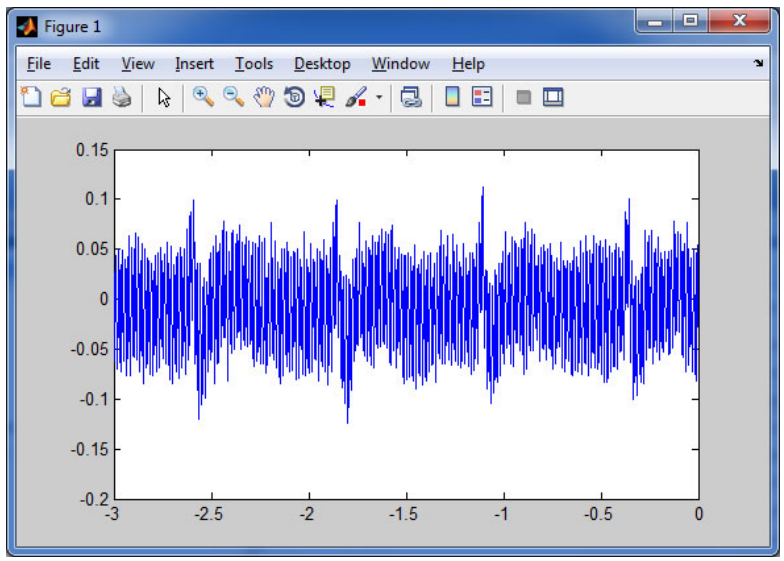

You can do additional filtering by implementing a digital low pass filter with Matlab.

```
function [output] = simpleLPF( second, Volt, lowF, highF )
%  simple low pass filter attenudating signal
%  starting at lowF and completely stopping at highF

sampleFREQ=1/(second(2)-second(1));
%  calculate sampling frequency

FilterSpec =
fdesign.lowpass('Fp,Fst,Ap,Ast',lowF,highF,0.5,60,sampleFREQ);
%  specifies lpf start at lowF and stop at highF
%  with 0.5 ripple in passband and 60dB attenuation

HardwareDesign = design(FilterSpec,'equiripple');
% implement filter
% equiripple filter a filter which
```

```
% amplitude response oscillates uniformly between the tolerance
% bounds of each band

output = filter(HardwareDesign,Volt);
plot(second, output)

end
```

Here's the same data filtered by appropriate values for lowF = 20Hz and highF = 40Hz.

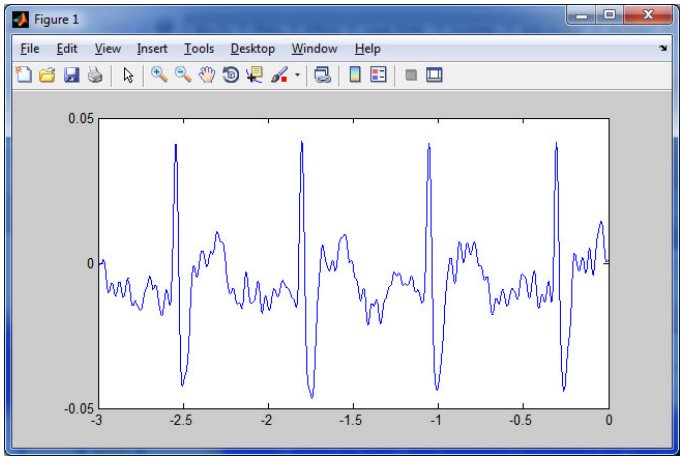

It's time to analyze your filtered data `output`. The waveform consisting of the peak is referred to as the QRS complex and occurs during ventricular depolarization which triggers the contraction of the ventricles. The large signal corresponds to the larger tissue mass of the ventricle.

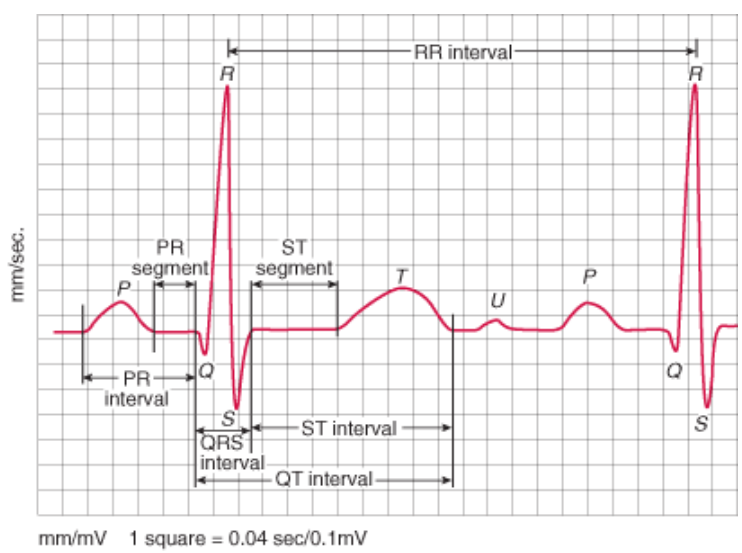

To generate a R-R interval time series, you need a peak detection algorithm that returns the locations of the R peaks. Use the built-in Matlab function "findpeaks".

```
[pks,locs]= findpeaks (X) returns the indices "locs" at which the peaks
occur as well as the value of the peaks "pks”
```

`findpeaks` also allows the user to specify the minimum peak height (`MinPeakHeight`) and the minimum peak distance (`MinPeakDistance`).

For example:

```
[peaks,locs] = findpeaks(Volt, ' MinPeakHeight ',MPH)
         %enter a value for MPH
```

By observing your ECG, you can set a threshold for `MinPeakHeight` and/or `MinPeakDistance` so that small peaks are not counted. Calculate the average heart rate by counting the number of peaks. The number of peaks is shown in the MATLAB workspace. You can also use the command

```
length(X) returns the length of vector X.
```

You will need the total elapsed time between the first and last peak to calculate the beats/minute.

Heart Rate Analysis - Part 2

Now calculate the heart rate by take the average or mean of the time between beats. This is referred to as the RR time series and is the consecutive time between R-wave peaks or RR interval.

Use the built in MATLAB function diff and mean

```
mydiff = diff(X), for a vector X, is [X(2)-X(1), X(3)-X(2) ...
X(n)-X(n-1)

mean(X) returns the mean value of the elements in X
```

Display the answer as beats/minute and average RR interval.

Standard Deviation of the RR Series

Measuring the beat to beat variability in the ECG waveform gives insight into the health of the cardiovascular system. A heart beating at the same rate for each beat (unlikely) would have a standard deviation of zero for the RR series. For this exercise, calculate the standard deviation for the RR series (in milliseconds). This gives the standard deviation between beats. [Typically the ECG measurement is done over a much longer period.]

Use the MATLAB function `std`

```
sdev = std(X), where X is a vector, returns the standard
deviation.
```

Part II-B: Questions

1. What parameters did you use in the findpeaks and why did you select those values? Include screenshot of your filtered waveform.

2. Calculate, plot and submit the instantaneous heart rate between each of your heart beats.

Part II Write up Submission

Upload the answers to Parts II-A and II-B in a single document to the course wiki by **October 24.**

After completing the lab, place the resistors and capacitors in the re-use bins and ***return the rest of the components.***