No.	REVISIONS	DATE	BY
A	RELEASE TO PRODUCTION	JULY 2007	JAG

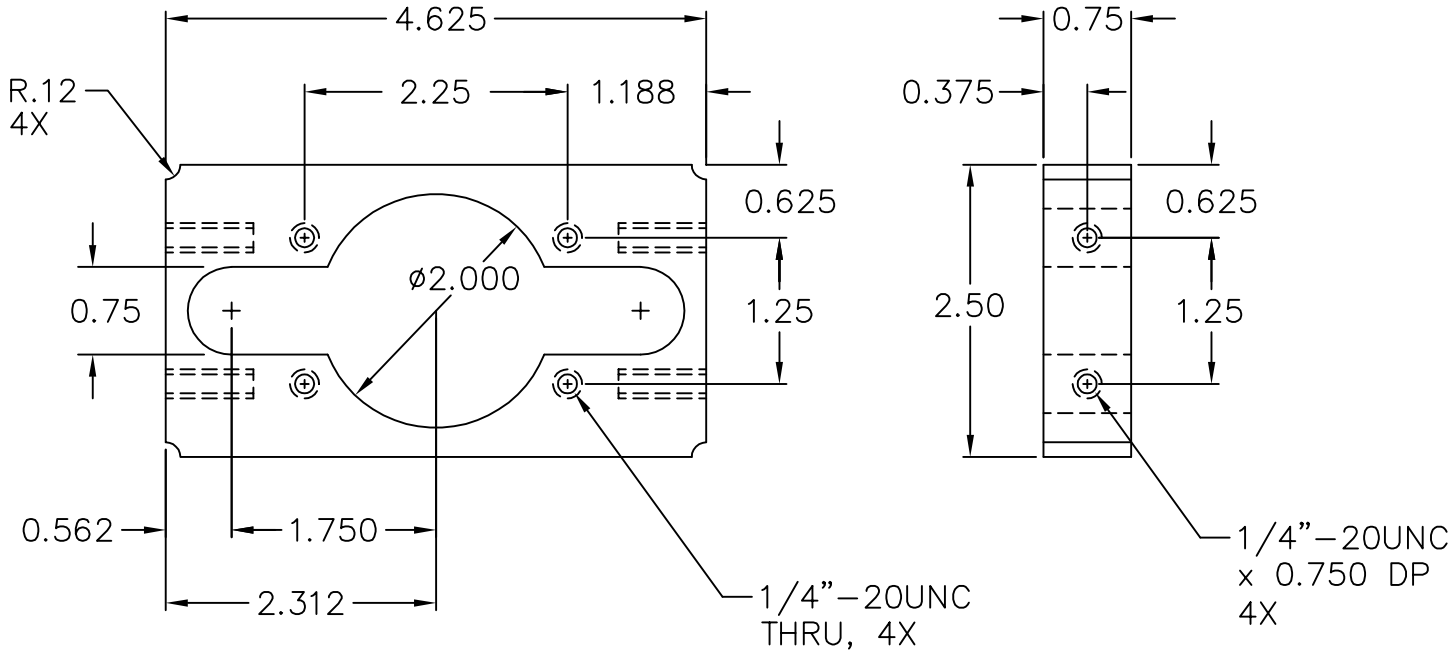

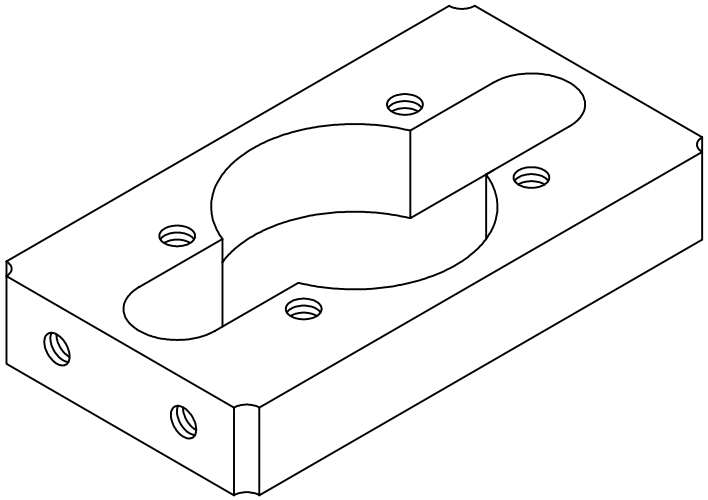

UNLESS OTHERWISE SPECIFIED
DIMENSIONS ARE IN INCHES [MM]
TOLERANCES ARE:

.XX	.XXX	ANGLES
±.015	±.005	±1/2°

MATERIAL
ALUM ALLOY
6061–T6

FINISH
NONE

MOUNTING BLOCK CENTER ANKLE

DRAWING NO. JAG18

REV. A

DO NOT SCALE DRAWING | SCALE: FULL | DRAWN: JAG | JULY 2007 | SHEET: 1 OF 1