No.	REVISIONS	DATE	BY
A	RELEASE TO PRODUCTION	JULY 2007	JAG

NOTES: SIX REQUIRED PER FRAME.

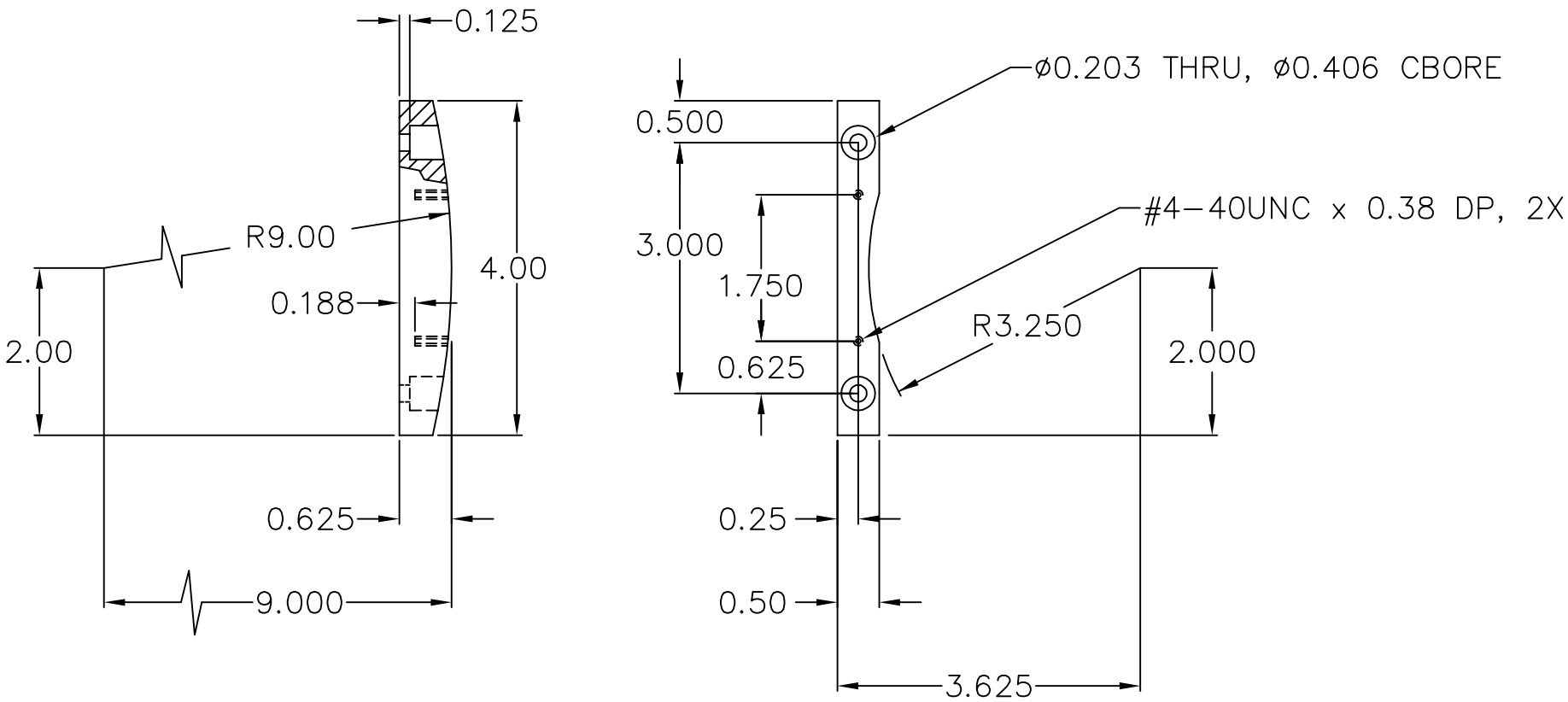

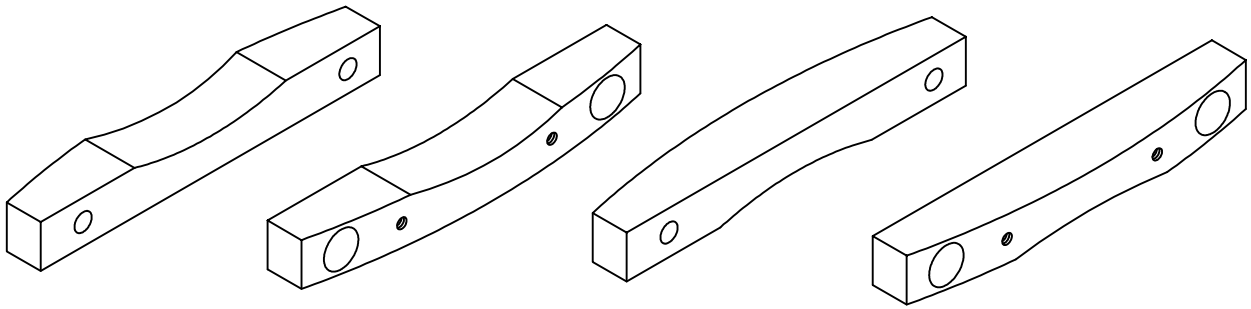

UNLESS OTHERWISE SPECIFIED DIMENSIONS ARE IN INCHES [MM] TOLERANCES ARE: .XX ±.015 .XXX ±.005 ANGLES ±1/2°	SKIN MOUNTING BLOCK FRAME ASSEMBLY		
MATERIAL ALUM ALLOY 6061-T6			
FINISH NONE		DRAWING NO. JAG21	REV. A
DO NOT SCALE DRAWING	SCALE: FULL	DRAWN: JAG JULY 2007	SHEET: 1 OF 1