IOP Conference Series: Materials Science and Engineering

PURPOSE-LED PUBLISHING™

PAPER • **OPEN ACCESS**

Electron Diffusion Model Based on *I-V* Data Fitting as the Calculation Method for DSSC Internal Parameters

To cite this article: Markus Diantoro *et al* 2019 *IOP Conf. Ser.: Mater. Sci. Eng.* **515** 012016

View the article online for updates and enhancements.

You may also like

- A review on ZnO nanostructured materials: energy, environmental and biological applications
J Theerthagiri, Sunitha Salla, R A Senthil et al.

- A short review on the advancement in the development of TiO_2 and ZnO based photo-anodes for the application of Dye-Sensitized Solar Cells (DSSCs)
Deepak Kumar

- Simulation and modelling of charge transport in dye-sensitized solar cells based on carbon nano-tube electrodes
Yahia Gacemi, Ali Cheknane and Hikmat S Hilal

This content was downloaded from IP address 140.213.238.167 on 02/03/2026 at 16:46

IOP Conf. Series: Materials Science and Engineering **515** (2019) 012016 doi:10.1088/1757-899X/515/1/012016

Electron Diffusion Model Based on *I-V* Data Fitting as the Calculation Method for DSSC Internal Parameters

Markus Diantoro[1,2,*], Solehudin[1], Arif Hidayat[1,2], Z. A. Imam Supardi[3], Setia Budi[4]

[1] Department of Physics, Mathematics and Natural Sciences Faculty, Universitas Negeri Malang, Jl. Semarang 65145, Indonesia
[2] Center of Advanced Materials for Renewable Energy (CAMRY), Universitas Negeri Malang, Jl. Semarang 65145, Indonesia
[3] Department of Physics, Faculty of Mathematics and Sciences, Universitas Negeri Surabaya, Jl. Semarang 65145, Indonesia
[4] Department of Chemistry, Faculty of Mathematics and Natural Sciences, Universitas Negeri Jakarta, Jl. Rawamangun muka, Jakarta Timur 13220, Indonesia

*Corresponding author's email: markus.diantoro.fmipa@um.ac.id

Abstract. Dye-sensitized solar cells (DSSC) made of TiO_2 have received considerable attention from many researchers for the last three decades. Rapid theoretical and experimental studies have been conducted to improve the performance of DSSC. To understand the DSSC internal parameters, we need to fine-tune each component and identify the suitable conditions in optimizing the performance of assembled devices. In this work, we analyzed and calculated of several parameters the DSSC photoanode, e.g. electron diffusion and photon absorption coefficients. The experimental *I-V* data from solar simulator measurements were fitted base on electron diffusion model using Microcal Origin software. We compared the photon absorption coefficient values from this calculation method with the result of UV-Vis measurement and compared the electron diffusion coefficient values with the result of the SEM image data fitting calculation method. It was apparent that the results of *I-V* data fitting calculation method were comparable with the results of two other techniques.

Keywords: DSSC, diffusion model, *I-V* data fitting, electron diffusion coefficient, photon absorption coefficient

1. Introduction

One type solar cell of dye-sensitized (DSSC) combined of typical titanium dioxide (TiO_2) is one of the most significant attention from many researchers for the recent decades after the work of O'Regan and Gratzel published in 1991 [1]. The DSSC is well known as a green and inexpensive photovoltaic device due to its natural available abundant materials and simple fabrication compared to two other type of solar cells [2]. From the milestone finding, extensive studies were expanded on the theoretical as well as experimental to improve the efficiency from 7.1% to 13% from 1991 to 2014. The latter is a criterion for the commercial application [3]. The current experimental studies on DSSC, such as [4–6], was a focus on material manufacture.

Content from this work may be used under the terms of the Creative Commons Attribution 3.0 licence. Any further distribution of this work must maintain attribution to the author(s) and the title of the work, journal citation and DOI.
Published under licence by IOP Publishing Ltd

Theoretical modeling of the previous works [7–9] may provide better informed of how the system works. One of the theoretical modelings is the macroscopic diffusion model. The diffusion model had been developed to find an explicit equation of photocurrent as a function of thickness, light absorption, and light intensity by simplifying the actual DSSC mechanisms. In this model, the critical properties, cell design parameters, and operational parameters remain under consideration. This model was developed by Ferber [10] and then had been adopted by many researchers [11–15]. Recently, [16] had calculated DSSC electrical operational parameters such as the shunt resistance using Shockley's equation fit analyses on *I-V* data plot. This method performed good results in calculating DSSC electrical operational parameters, but this method could not estimate well the material properties and cell design parameters of DSSC. It is essential to obtain the internal parameters to search the fittest of each component and to identify the ideal conditions device performance. We report the calculation of material features and cell design parameters of DSSC such as diffusion coefficient using the macroscopic diffusion model based fit analyses on *I-V* data.

2. Device Modelling

A stand-alone DSSC is generally consisted of a metal oxide semiconductor thin film supported by a suitable dye for the light absorbing charge transfer to form a photo-anode. This photo-anode is filled using specific electrolyte, e.g. iodide/tri-iodide redox and subsequently sandwiched onto two transparent conductive oxides (TCO) coated glass. The TCO coated glass faced to the prepared materials which were firstly covered with Pt or carbon as the catalyst of the redox reaction. The design of this device is depicted in Figure 1.

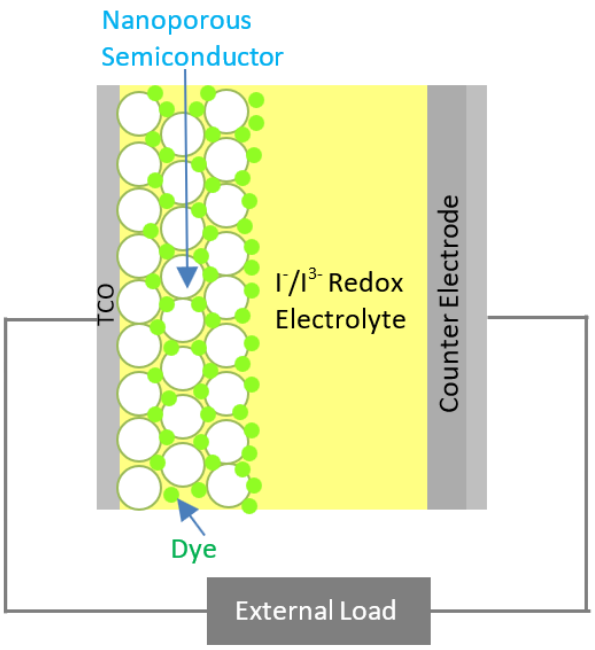

Figure 1. An illustrated Diagram of DSSC.

Figure 2 shows the working principle of DSSC. The photon is absorbed by the dye (1), and pump the electron to be excited (2). The injection of excited electron from the dye to the oxidic layer, (3) and then diffuse the TCO (4). From TCO, electron continues transferred to an external load to reach the counter electrode (5), through the I^-/I^{3-} electrolyte (6). To complete the cycle, the electron is then used by the electrolyte to regenerates the dye (7).

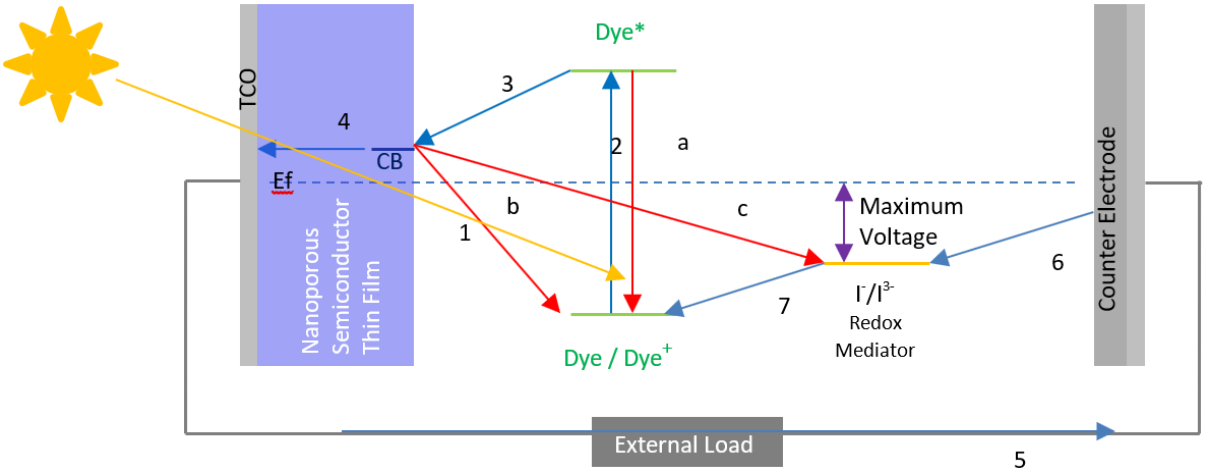

Figure 2. Working principle of DSSC

The processes above is called forward reaction which is the ideal cyclic of DSSC. However, there are some backward processes which reduce the efficiency of DSSC. The molecule of excited dye could oscillate to its ground state (a). This process can be neglected compared to the electron injection process (3) since the ratio of the relevant rate constants k_3/k_a is about 1000 [F7]. The electron in the conduction band of oxide semiconductor could be caught by the non-ground state of dye-molecules (b), but since the rate constant k_6 is 100 times higher the k_b (due to high iodide concentration), then this process is also can be neglected [F8]. Another possible process could happen as conducting band electron may be assigned by the tri-iodide electrolyte. This recombination process is necessary to be considered to enhance efficiency.

3. Theoretical Analysis

The total charge carriers current density in the cell are

$$j_i = eD_i \frac{\partial n_i}{\partial x} + en_i \mu_i E \tag{1}$$

where e, E, D_i, μ_i, and n_i is the electron charge, electrical field, charge carriers (electron, iodide, and tri-iodide ions) diffusion coefficient, mobility and density respectively. The first term represents the diffusion current and the second term is the drift current. In this approach, the drift current was neglected compared to the diffusion current.

The recombination rate of the electrons conduction band R_e to the tri-iodide species could be obtained from first order kinetic arguments. By introducing a mean electron lifetime τ_e and by assuming of the recombination rate (R_e) is proportional to the difference of electron density n_e from its equilibrium (dark).

$$R_e = \frac{n_e - \bar{n}_e}{\tau_e} \tag{2a}$$

For other charge carriers is

$$R_i = \frac{n_i - \bar{n}_i}{\tau_i} \tag{2b}$$

The photon flux is assumed given by

$$\phi(\lambda, x) = \phi_0(\lambda) e^{-\alpha(\lambda)x} \tag{3}$$

so, the incident photon rate is

$$-\frac{\partial \phi}{\partial x} = \alpha \phi_0 e^{-\alpha x} \tag{4}$$

and the electron generation rate is

$$G(x) = \eta_{inj} \int_{\lambda_1}^{\lambda_2} \alpha(\lambda) \phi_0(\lambda) e^{-\alpha(\lambda)x} d\lambda \tag{5}$$

Where $\alpha(\lambda)$, λ, $\phi(\lambda)$, and η_{inj}, is the absorption coefficient, wavelength, incident flux, and efficiency of electron injection, respectively. The integration limits reflect the characteristics of the absorptivity of the used of β-carotene. One photon is assumed to generate one electron as

$$G_e(x) = \alpha \phi_0 e^{-\alpha(\lambda)x} \tag{6}$$

The continuity of the number of charge carrier density is

$$\frac{\partial j_i}{\partial x} + e\frac{\partial n}{\partial \tau} + eG_e(x) - e\,\mathrm{R}_e(x) = 0 \tag{7}$$

for steady-state equation, we have as

$$\frac{\partial n}{\partial \tau} = 0 \tag{8}$$

so, with neglecting the carrier drift currents, we have

$$eD_i \frac{\partial^2 n_i}{\partial x^2} - e\frac{n_i - \bar{n}_i}{\tau_i} + e\alpha\phi_0 \exp(-\alpha x) = 0 \tag{9}$$

$$\frac{\partial^2 n_i}{\partial x^2} - \frac{n_i - \bar{n}_i}{L_i} + \frac{\phi_0 \alpha \tau_i \,\mathrm{e}^{-\alpha x}}{L_i} = 0 \tag{10}$$

with L_i is diffusion length defined as

$$L_i = \sqrt{D_i \tau_i} \tag{11}$$

Solving this differential equation for an electron in TiO_2 conduction band we get the electron density

$$n_e(x) = n_0 + a\cosh\left(\frac{x}{L_e}\right) + b\sinh\left(\frac{x}{L_e}\right) + \frac{\alpha\phi_0\tau_e}{1-\alpha^2 L_e^{\,2}}\exp(-\alpha x) \tag{12}$$

Then the current density is

$$j_e(x) = eD_e \frac{\partial n_e}{\partial x} \tag{13}$$

$$j_e(x) = eD\left(\frac{a}{L_e}\sinh\left(\frac{x}{L_e}\right) + \frac{b}{L_e}\cosh\left(\frac{x}{L_e}\right) - \frac{\alpha^2\phi_0\tau_e}{1-\alpha^2 L_e^{\,2}}\exp(-\alpha x)\right) \tag{14}$$

The a and b constants can be evaluated using these following boundary conditions

$$n_e(0) = n_0 \exp\left(\frac{eV}{mkT}\right) \tag{15}$$

$$\left.\frac{\partial n_e}{\partial x}\right|_{x=d} = 0 \tag{16}$$

where V, k, T, m and n_0 is the bias voltage on the cell, Boltzmann constant, cell temperature, cell ideality factor and electron density in equilibrium (dark) condition.

$$a = n_0\left(\exp\left(\frac{eV}{mkT}\right)-1\right)-\frac{\alpha\phi_0\tau_e}{1-\alpha^2 L_e^{\,2}} \tag{17}$$

$$b = \frac{\alpha^2\phi_0\tau_e L_e}{1-\alpha^2 L_e^{\,2}}\frac{\alpha L e^{-\alpha d}}{\cosh\left(\frac{d}{L_e}\right)} - \tanh\left(\frac{x}{L_e}\right)\left(n_0\left(\exp\left(\frac{eV}{mkT}\right)-1\right)-\frac{\alpha\phi_0\tau_e}{1-\alpha^2 L_e^{\,2}}\right) \tag{18}$$

From Equation (14) and employing several conditions, the total electron current density equals the current density through the semiconductor, and TCO boundary (at $x = 0$) can be written as

$$j_{total} = \frac{e\phi_0 L_e\alpha}{(1-L_e^{\,2}\alpha^2)}\left[-L_e\alpha + \tanh\left(\frac{d}{L_e}\right)+\frac{L_e\alpha\exp(-\alpha d)}{\cosh\left(\frac{d}{L_e}\right)}\right]-\frac{eD_e n_0}{L_e}\tanh(\frac{d}{L_e})\left(\exp\left(\frac{eV}{mkT}\right)-1\right) \tag{19a}$$

$$j_{total} = \frac{e\phi_0 D_e\tau_e\alpha}{(1-D_e\tau_e\alpha^2)}\left[-\alpha+\frac{1}{\sqrt{D_e\tau_e}}\tanh\left(\frac{d}{\sqrt{D_e\tau_e}}\right)+\frac{\alpha\exp(-\alpha d)}{\cosh\left(\frac{d}{\sqrt{D_e\tau_e}}\right)}\right]-en_0\sqrt{\frac{D_e}{\tau_e}}\tanh(\frac{d}{\sqrt{D_e\tau_e}})\left(\exp\left(\frac{eV}{mkT}\right)-1\right) \tag{19b}$$

Which is similar to Shockley's equation

$$j = j_{sc} - j_0\left(\exp\left(\frac{eV}{mkT}\right)-1\right) \tag{20}$$

The experimental result showed that the TiO_2 porosity affects the light absorption and the electron diffusion coefficients [13]. The relation of porosity (P) and light absorption (α) coefficient may be expressed as follow

$$\alpha = 2568(1-P)(\mathrm{P}+2.89) \tag{21}$$

While the electron diffusion coefficients and the porosity is associated with

$$D = a\left|P-P_c\right|^{\mu} \tag{22}$$

where P_c, a, and μ values fall to 0.76, 4 x 10^{-4} cm^{-2} s^{-1}, and 0.82, respectively [17].

4. Parametric Calculation

The parameters of DSSC such as the electron density in equilibrium or dark condition, ideality factor, electron lifetime, diffusion, and absorption coefficient were calculated by the I-V data fitting method using Microcal Origin software. The TiO_2-β-Carotene DSSC experimental I-V data plot was fitted using equation (19 b). The published experimental I-V data (we use the result of [18]) were digitized using GetData Graph Digitize 2.26 software and then fitted using equation (19 b). The useful initial parameters value input were listed in Table 1. The parameter's value after fitting process was listed in Table 2. The I-V curve and the fitting results of Fukai *et al.* and the TiO_2-β-Carotene DSSC are shown in Figure 3 and Figure 4.

Table 1. The input parameters of model calculation

Symbol	Description	Value		Ref.
		Fukai *et al.*	TiO_2-β-Carotene	
e	the electron charge	1.60218×10^{-19} C	1.60218×10^{-19} C	-
$\phi_o(\lambda)$	the incident photon flux	1.0×10^{17} cm^{-2} s^{-1}	1.0×10^{16} cm^{-2} s^{-1}	[19]
d	the thickness	6×10^{-4} cm	8×10^{-4} cm	[18]
D_e	the electron diffusion coeff.	1.10×10^{-4} cm^2 s^{-1}	1.10×10^{-4} cm^2 s^{-1}	[19]
τ_e	the electron lifetime	10^{-2} s	10^{-2} s	[20]
α	the absorption coeff.	5000 cm^{-1}	5000 cm^{-1}	[21]
n_o	the electron density in an equilibrium	10^{11} cm^{-3}	10^{11} cm^{-3}	[19]
m	the ideality factor	4.5	4.5	[21]

Table 2. The parameters extracted from the fitting result

Symbol	Parameter value		Description
	Fukai *et al.*	TiO_2-β-Carotene	
e	1.60218×10^{-19} C	1.60218×10^{-19} C	Constant
$\phi_o(\lambda)$	1.0×10^{17} cm^{-2} s^{-1}	1.0×10^{16} cm^{-2} s^{-1}	Constant
d	6×10^{-4} cm	8×10^{-4} cm	Constant
D_e	1×10^{-4} cm^2 s^{-1}	1×10^{-4} cm^2 s^{-1}	Fitted.
τ_e	0.00867 s	0.007225 s	Fitted
α	2127.74 cm^{-1}	1239 cm^{-1}	Fitted
n_o	1.0437122×10^{13} cm^{-3}	0.80117×10^{15} cm^{-3}	Fitted.
m	2.31826	9.46529	Fitted

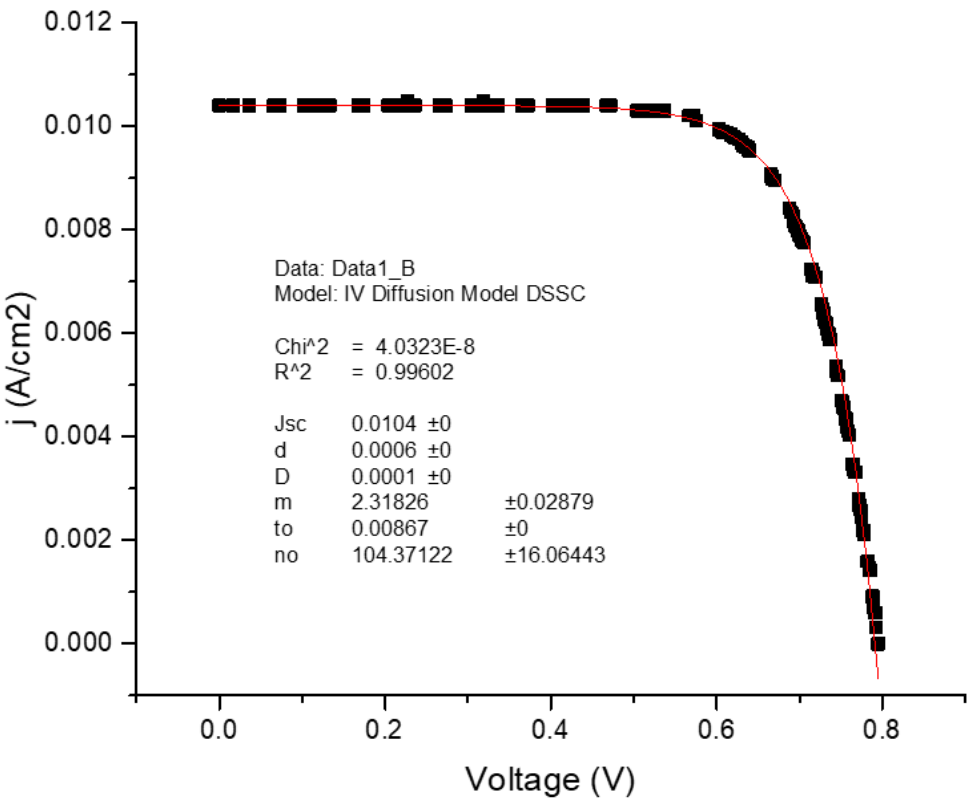

Figure 3. The fitting using Equation 19b on [18] *I-V* data of TiO_2

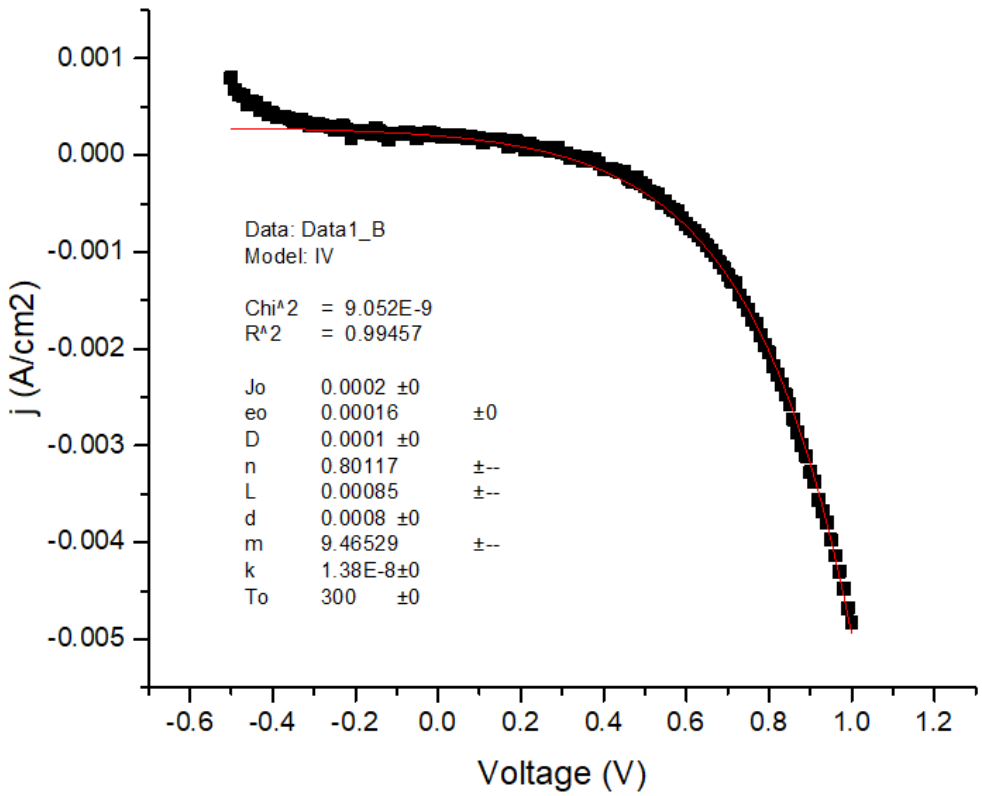

Figure 4. The fitting properties using Equation 19b on TiO_2-β-Carotene I-V.

5. Comparison with Published Experimental Data

The diffusion and absorption coefficient obtained by the fitting method calculation were compared with the results of the calculation of equation (21) and (22). The [18] sample porosity was explicitly showed at their paper. The porosity of TiO_2-β-Carotene DSSC was calculated from the TiO_2-β-Carotene SEM image which showed in Figure 5 using Microcal Origin based 2D surface integral method. The 3D mapping of Figure 5 and the 2D surface integral result was shown in Figure 6. From Figure 6 we know that cell total volume of the sample was

$$V_{tot} = 5.4\times10^4 \cdot 10 \cdot 10 = 5.4\times10^6 \tag{23}$$

and the solid volume of 2D surface integral reached to 2466651.006875. Based equation 24, we found that the porosity falls to 0.543212777.

$$P = \frac{V_{tot} - V_{solid}}{V_{tot}} \tag{24}$$

These values of porosity were then used to calculate the diffusion and absorption coefficient base on Equation 21 and 22. These obtained of diffusion and absorption coefficients are shown in Table 3.

Table 3. Diffusion and absorption coefficients calculated from the porosity

Porosity value obtained by calculation		**Absorption coefficient (α) (cm^{-1})**		**Diffusion coefficient (D) ($cm^2\ s^{-1}$)**	
Fukai *et al.*	TiO_2-β-Carotene	Fukai *et al.*	TiO_2-β-Carotene	Fukai *et al.*	TiO_2-β-Carotene
0.61 [18,22]	0.543212777	3505.32	4027.26	0.0000844	0.0001142 $cm^2\ s^{-1}$

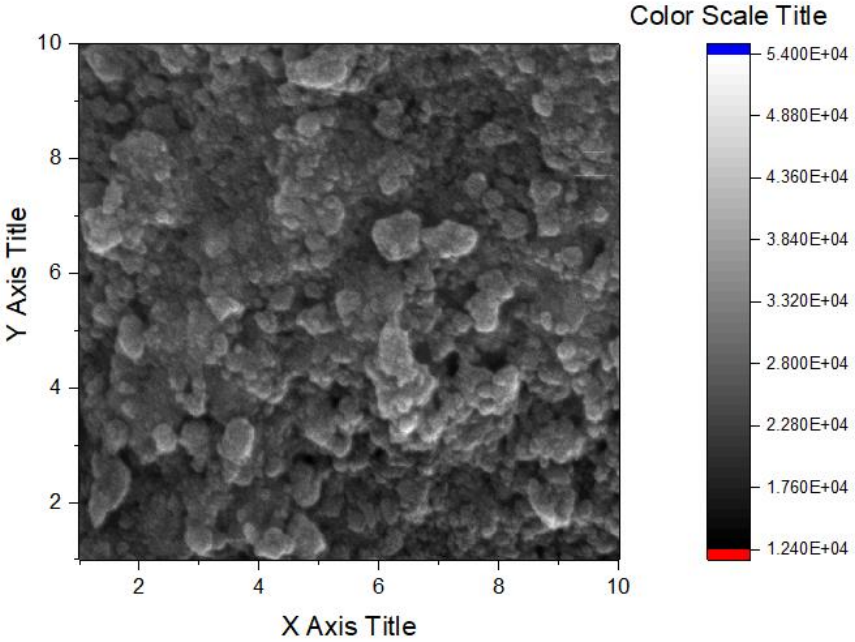

Figure 5. SEM image of TiO_2 on 50,000 times magnification.

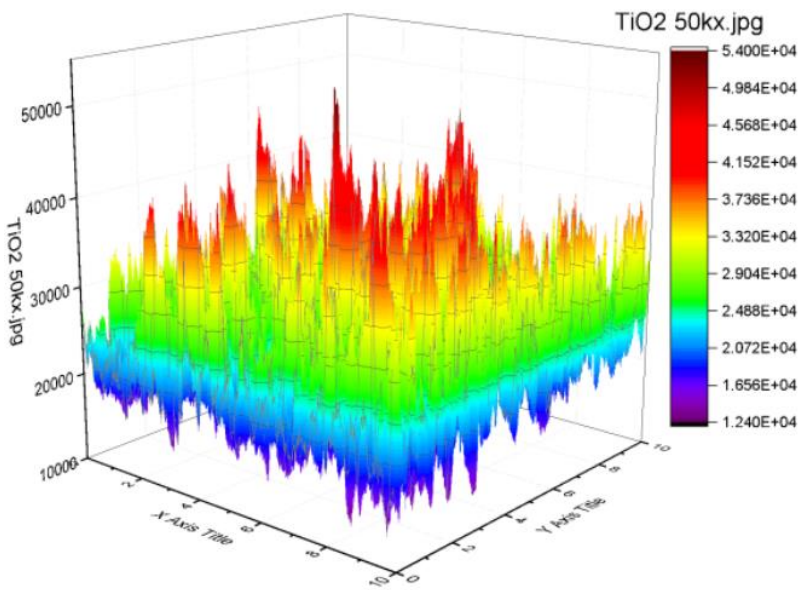

Figure 6. Microcal Origin 3D contour mapping on SEM image of TiO_2 on 50,000 times magnification and its 2D integral volume calculation

Based on Table 3 and 4, It was found that the difference of diffusion coefficient value obtained by *I-V* data fitting method and by porosity based calculation was relatively small for both [18,22] and the TiO_2-β-Carotene sample. However, the difference of absorption coefficient value obtained by the *I-V* data fitting method and by porosity based calculation was relatively large for both [18,22] and the TiO2-β-Carotene sample. The percentage differences shown in Table 4 were calculated using Equation (26).

$$R\% = \frac{X_{fit} - X_{por}}{X_{por}} \times 100\% \tag{26}$$

Table 4. Percentage of diffusion and absorption coefficient calculation from the porosity

Data Result	R% on Absorption coefficient (α)	R% on Diffusion coefficient (D)
Fukai *et al.*	39.30	18.48
TiO_2-β-Carotene	69.23	12.43

6. Conclusion

The diffusion and absorption coefficient obtained from DSSC *I-V* data fitting has been compared with the porosity based on calculation. It was found that the diffusion coefficient obtained from the *I-V* data fitting method and porosity based on calculation was acceptable for both [18,22] and the TiO_2-β-Carotene sample. However, comparison of absorption coefficient value obtained by *I-V* data fitting method and by porosity based on calculation was not acceptable for both [18,22] and the TiO_2-β-Carotene sample.

References

[1] O'Regan B and Grätzel M 1991 A low-cost, high-efficiency solar cell based on dye-sensitized colloidal TiO_2 films *Nature* **353** 737–40

[2] Gong J, Sumathy K, Qiao Q, and Zhou Z 2017 Review on dye-sensitized solar cells (DSSCs): Advanced techniques and research trends *Renew. Sustain. Energy Rev.* **68** 234–46

[3] Mathew S, Yella A, Gao P, Humphry-Baker R, Curchod B F E, Ashari-Astani N, Tavernelli I, Rothlisberger U, Nazeeruddin M K and Grätzel M 2014 Dye-sensitized solar cells with 13% efficiency achieved through the molecular engineering of porphyrin sensitizers *Nat. Chem.* **6** 242–7

[4] Yang R, Cai J, Lv K, Wu X, Wang W, Xu Z, Li M, Li Q and Xu W 2017 Fabrication of TiO_2 hollow microspheres assembly from nanosheets (TiO_2-HMSs-NSs) with enhanced photoelectric conversion efficiency in DSSCs and photocatalytic activity *Appl. Catal. B Environ.* **210** 184–93

[5] Kazmi S A, Hameed S, Ahmed A S, Arshad M, and Azam A 2017 Electrical and optical properties of graphene-TiO_2 nanocomposite and its applications in dye-sensitized solar cells (DSSC) *J. Alloys Compd.* **691** 659–65

[6] Kundu S, Sarojinijeeva P, Karthick R, Anantharaj G, Saritha G, Bera R, Anandan S, Patra A, Ragupathy P, Selvaraj M, Jeyakumar D and Pillai K V 2017 Enhancing the Efficiency of DSSCs by the Modification of TiO_2 Photoanodes using N, F and S, co-doped Graphene Quantum Dots *Electrochimica Acta* **242** 337–43

[7] Wang Y, Wu D, Fu L-M, Ai X-C, Xu D and Zhang J-P 2014 Density of state determination of two types of intra-gap traps in dye-sensitized solar cells and its influence on device performance *Phys Chem Chem Phys* **16** 11626–32

[8] Hsiao P-T, Tung Y-L and Teng H 2010 Electron Transport Patterns in TiO_2 Nanocrystalline Films of Dye-Sensitized Solar Cells *J. Phys. Chem. C* **114** 6762–9

[9] Villanueva-Cab J, Jang S-R, Halverson A F, Zhu K and Frank A J 2014 Trap-Free Transport in Ordered and Disordered TiO_2 Nanostructures *Nano Lett.* **14** 2305–9

[10] Ferber J rg, Stangl R and Luther J 1998 An electrical model of the dye-sensitized solar cell *Sol. Energy Mater. Sol. Cells* **53** 29–54

[11] Korfiatis D P, Potamianou S F and Thoma K-A T 2008 Modeling of dye-sensitized titanium dioxide solar cells *Ionics* **14** 545–8

[12] Joshi P H, Korfiatis D P, Potamianou S F and Thoma K-A T 2013 Optimum oxide thickness for dye-sensitized solar cells—effect of porosity and porous size. A numerical approach *Ionics* **19** 571–6

[13] Ni M, Leung M K H and Leung D Y C 2008 Theoretical modeling of the electrode thickness effect on maximum power point of dye-sensitized solar cell *Can. J. Chem. Eng.* **86** 35–42
[14] Bavarian M, Nejati S, Lau K K S, Lee D and Soroush M 2014 Theoretical and Experimental Study of a Dye-Sensitized Solar Cell *Ind. Eng. Chem. Res.* **53** 5234–47
[15] Gentilini D, D'Ercole D, Gagliardi A, Brunetti A, Reale A, Brown T and Di Carlo A 2010 Analysis and simulation of incident photon to current efficiency in dye-sensitized solar cells *Superlattices Microstruct.* **47** 192–6
[16] Diantoro M, Suprayogi T, Hidayat A, Taufiq A, Fuad A, and Suryana R 2018 Shockley's Equation Fit Analyses for Solar Cell Parameters from I-V Curves *Int. J. Photoenergy* **2018** 1–7
[17] Benkstein K D, Kopidakis N, van de Lagemaat J and Frank A J 2003 Influence of the Percolation Network Geometry on Electron Transport in Dye-Sensitized Titanium Dioxide Solar Cells *J. Phys. Chem. B* **107** 7759–67
[18] Fukai Y, Kondo Y, Mori S and Suzuki E 2007 Highly efficient dye-sensitized SnO_2 solar cells having sufficient electron diffusion length *Electrochem. Commun.* **9** 1439–43
[19] Zouhri K, Alsadi J, Ferreira L, Chikhalsouk M, Shinneeb M, Koudsi F, Khondker O, Mohamad S and Nimir Y 2017 Numerical method of the TiO_2 porosity effect on dye-sensitized solar cell exergy efficiency *Sol. Energy* **155** 920–33
[20] Gomez R and Salvador P 2005 Photovoltage dependence on film thickness and type of illumination in nanoporous thin film electrodes according to a simple diffusion model *Sol. Energy Mater. Sol. Cells* **88** 377–88
[21] Lee J-J, Coia G M and Lewis N S 2004 Current Density versus Potential Characteristics of Dye-Sensitized Nanostructured Semiconductor Photoelectrodes. 1. Analytical Expressions *J. Phys. Chem. B* **108** 5269–81
[22] Nakade S, Saito Y, Kubo W, Kanzaki T, Kitamura T, Wada Y and Yanagida S 2003 Enhancement of electron transport in nano-porous TiO_2 electrodes by dye adsorption *Electrochem. Commun.* **5** 804–8

Acknowledgments
We acknowledge the funding support from the Ministry of RHE through PNBP-scheme project of the center of excellent-CAMRY.