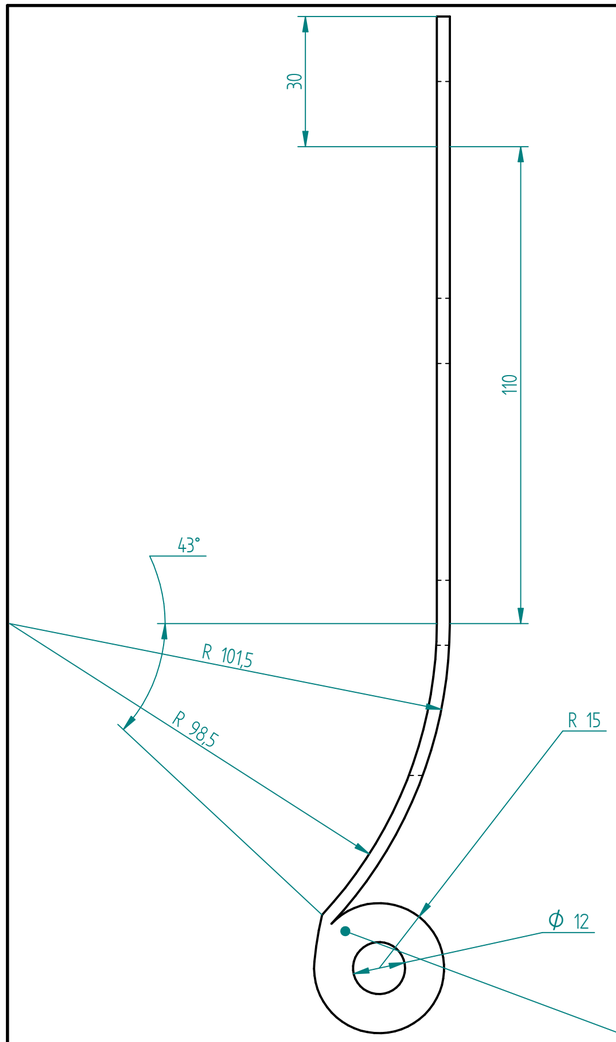

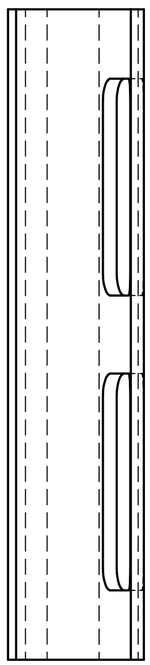

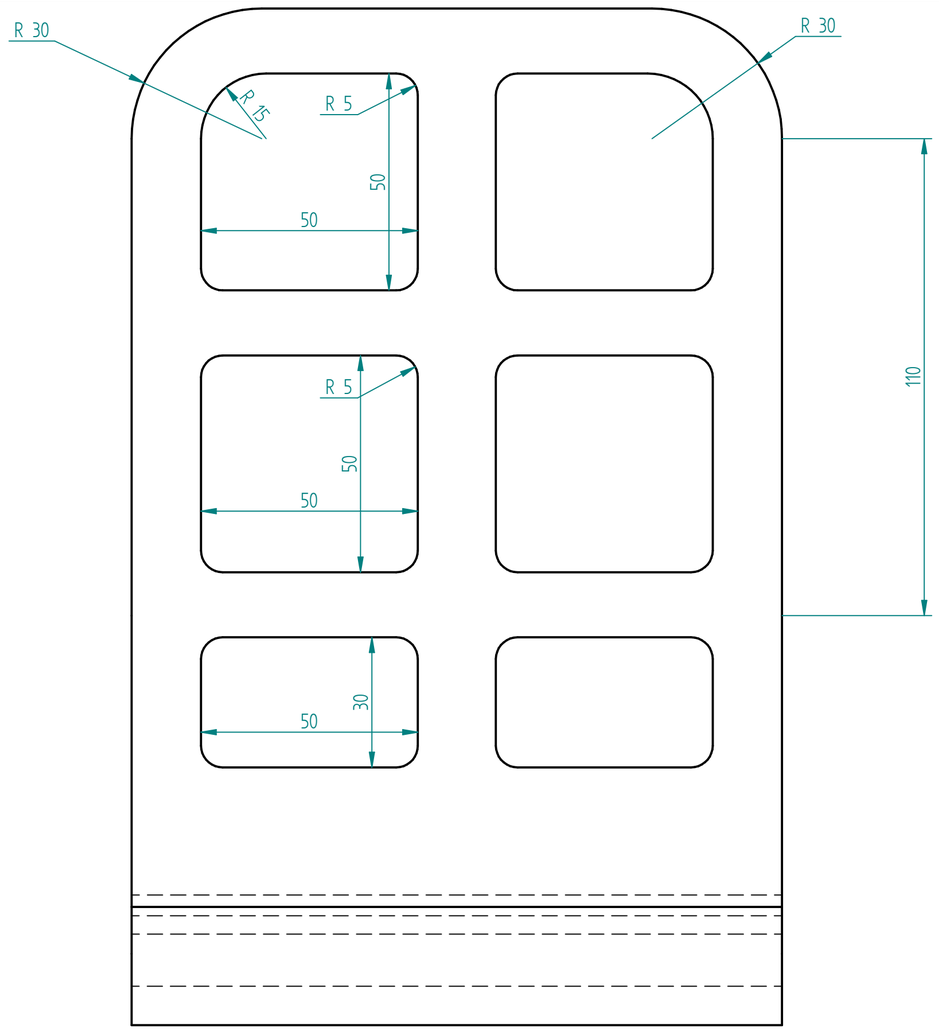

焊接处
将弯曲后的铁板与圆柱体焊接，相切关系。

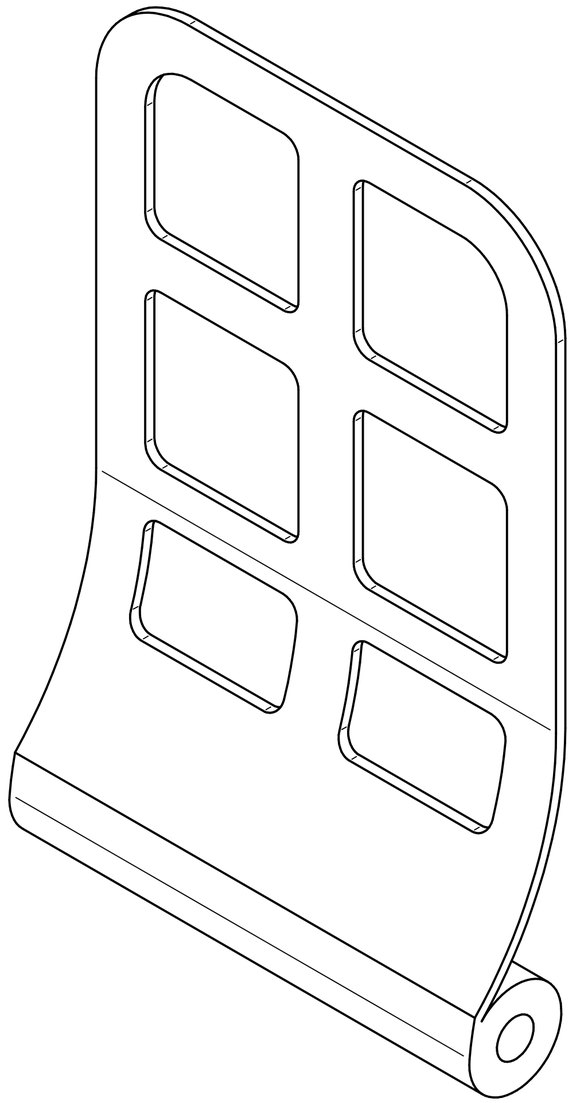

REVISION HISTORY			
REV	DESCRIPTION	DATE	APPROVED

	NAME	DATE
DRAWN	voidman	08/07/15
CHECKED		
ENG APPR		
MGR APPR		

UNLESS OTHERWISE SPECIFIED
DIMENSIONS ARE IN MILLIMETERS
ANGLES ±X.X°
2 PL ±X.XX 3 PL ±X.XXX

Solid Edge

TITLE

SIZE A2 | DWG NO | REV

FILE NAME: Pedal-Pad.dft

SCALE: | WEIGHT: | SHEET 1 OF 1