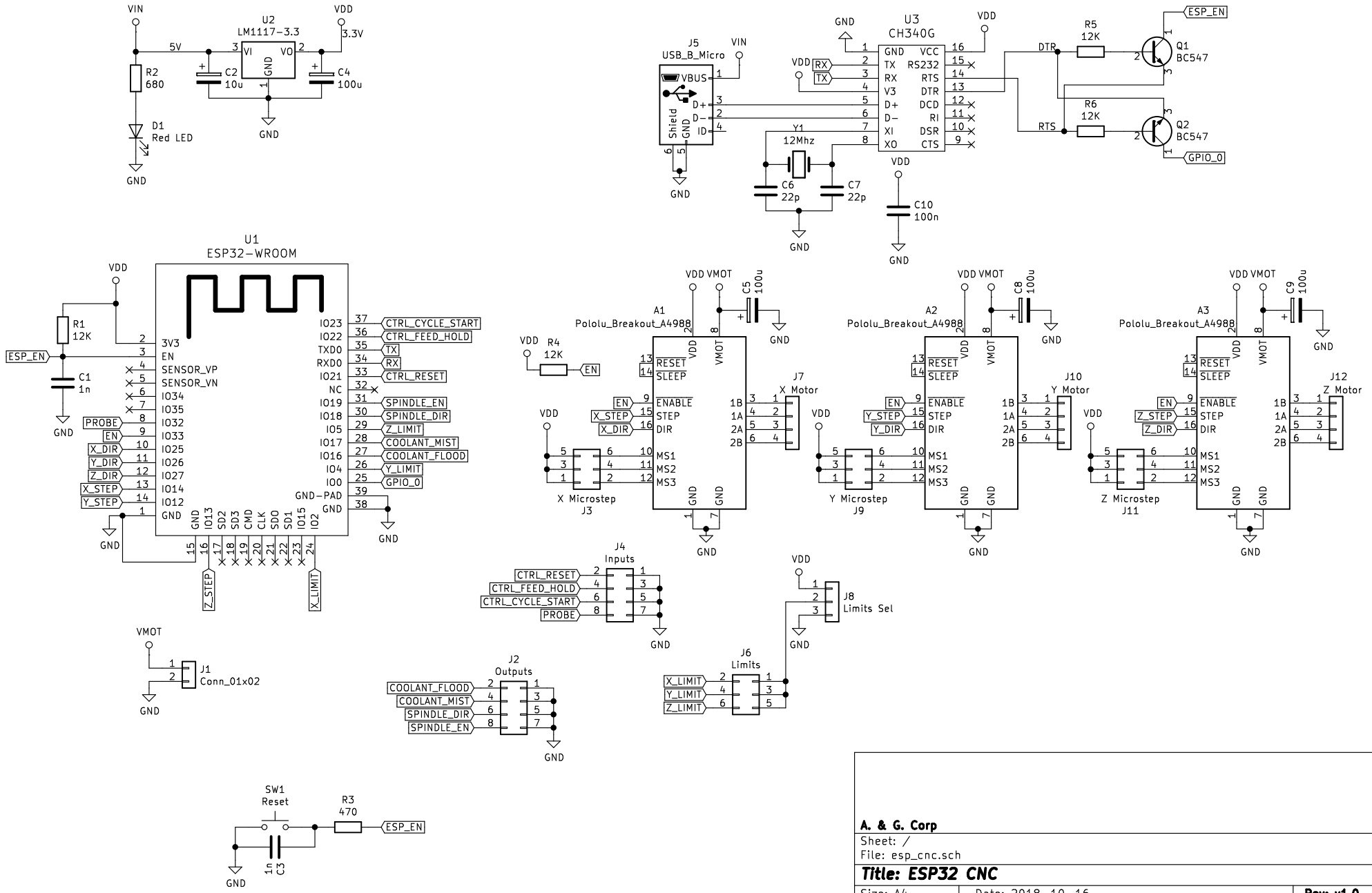

A. & G. Corp

Sheet: /

File: esp_cnc.sch

Title: ESP32 CNC

Size: A4	Date: 2018-10-16	**Rev: v1.0**
KiCad E.D.A. kicad (5.0.0)		Id: 1/1