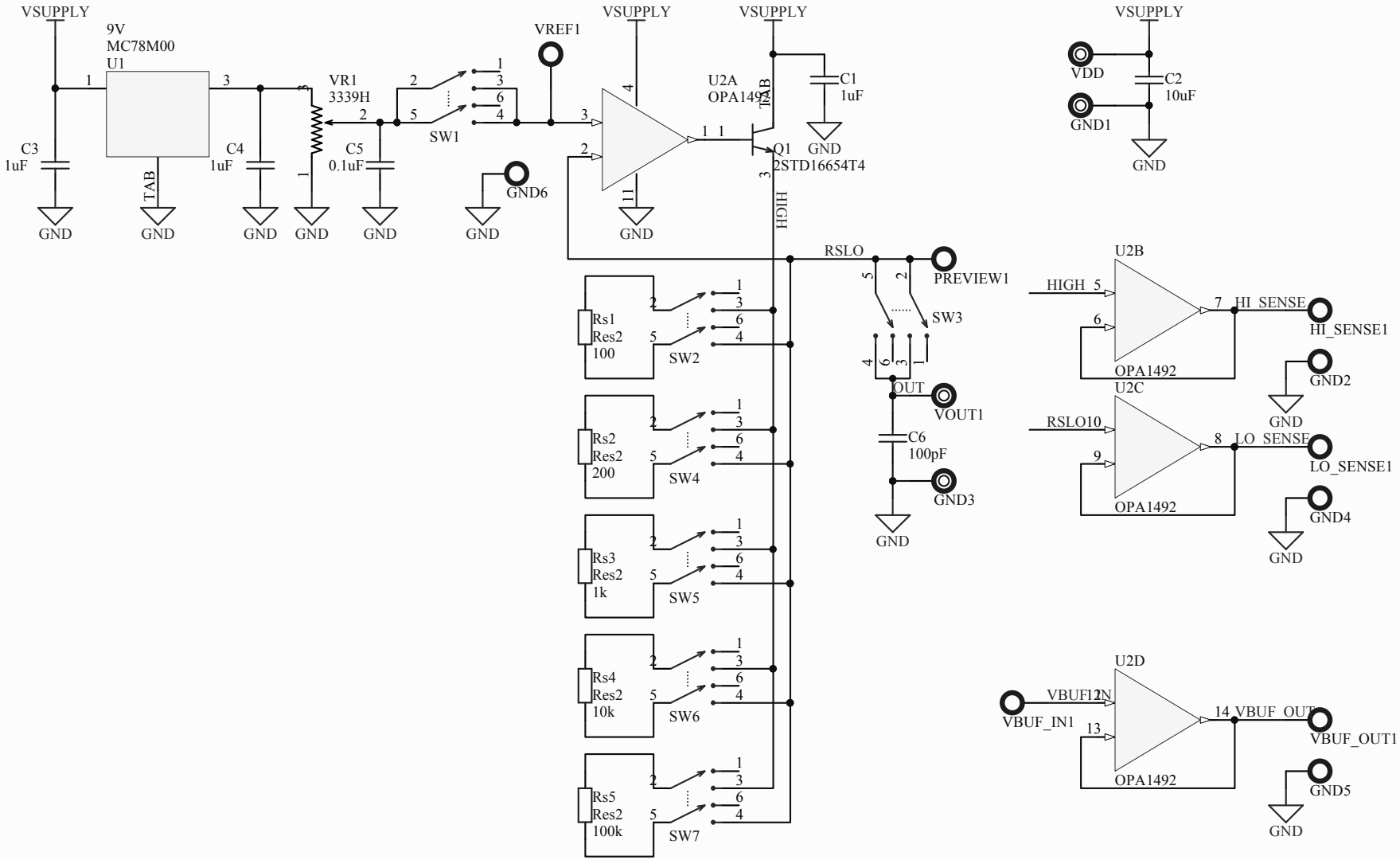

Title		
Size A	Number	Revision
Date: 4/4/2016	Sheet of	
File: C:\Users\..\linear_buffered_sense.SchDoc	Drawn By:	