REV	REV DESCRIPTION	DRAWN	APP'D	DATE

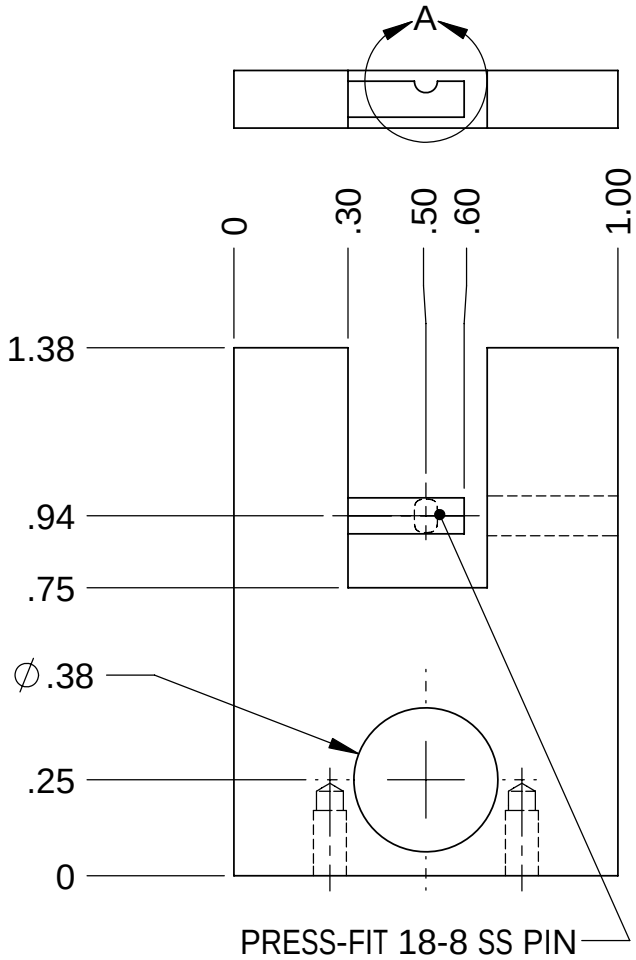

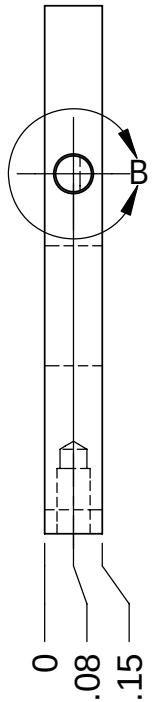

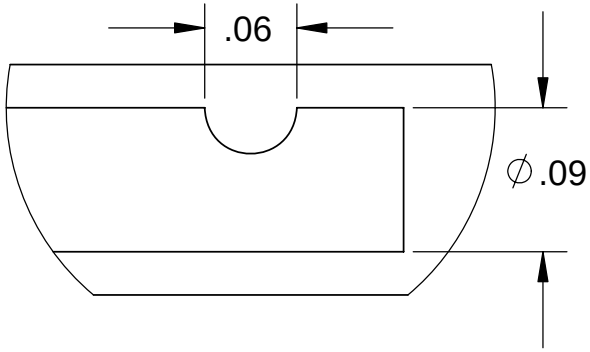

DETAIL A
SCALE 8 : 1

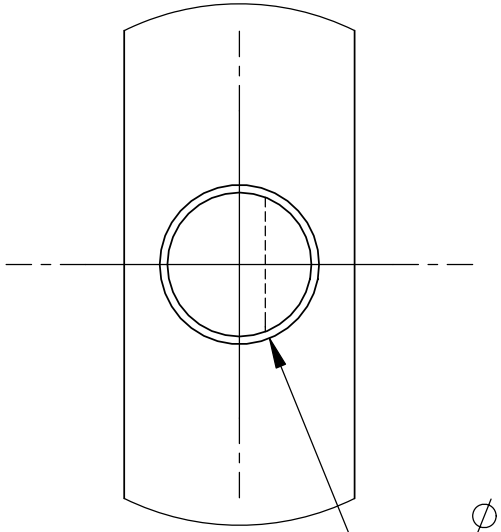

∅.10 MAX
CLEARANCE
FOR INSERTION
OF PIN

DETAIL B
SCALE 8 : 1

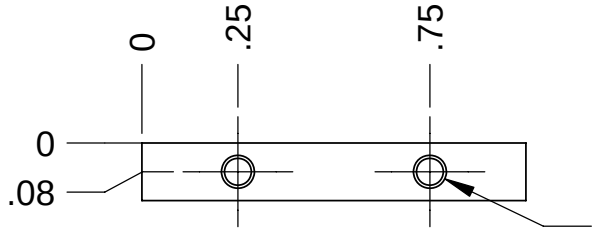

2X ∅ .07 ↧ .22
2-56 UNC ↧ .17

NOTE: ANODIZE BLACK BEFORE INSERTING PIN.

MATERIAL Alumninum 6061	FINISH Oil and burr free at 15× mag.	SCALE 2:1	DESC Anchor for Spring (for Adjustable Tapper)
TOLERANCES: .XX ± .005 .XXX ± .001 .XXXX ± .0005 ANGLES ± 1°	UNLESS OTHERWISE SPECIFIED: DIMENSIONS ARE IN INCHES. TOLERANCES PER ANSI Y14.5M 1982 AND NFI SPEC 01-004.	HHMI janelia farm research campus — Howard Hughes Medical Institute Janelia Farm Research Center	DRAWN DH · CHK'D · DATE 5/23/2007 · PROJ ENGR DH
	THIRD ANGLE PROJECTION		FILE NAME Anchor for Spring for Adjustable Tapper [JF-RK-TM0025]
		©2007 HOWARD HUGHES MEDICAL INSTITUTE (HHMNI). THIS HHMI PROPRIETARY INFORMATION MUST BE MAINTAINED IN THE SCTRICTEST OF CONFIDENCE AND MAY NOT BE COPIED, DISCLOSED, OR USED WITHOUT THE EXPRESS WRITTEN CONSENT OF HHMI.	DWG NO. JF-RK-TM0025 · REV. · SHEET 1 OF 1