Design and Analysis of a 1-DOF Underactuated Robotic Hand with Adaptive Grasping via Torsional Springs

Adrian
Northeastern University — EECE5554

March 20, 2026

link to one drive video

1 Introduction

Robotic grasping remains a fundamental bottleneck in manipulation, on one side fully actuated hands offer dexterity but are complex, on the other simpler grippers lack versatility. Underactuated hands offer a compelling tradeoff being able to achieve adaptive grasping across objects using minimal actuators. This works designs a four-finger underactuated robotic hand inspired by the SDM Hand [1], using torsional springs to achieve this across four different object geometries.

2 Literature Survey

Underactuated robotic hands have been studied extensively as a middle ground between simple grippers and fully actuated dexterous hands.

Table 1: Literature Survey: Underactuated Robotic Hand Designs

Author(s)	**Design**	**Act./Total DOF**	**Underactuation Method**	**Relevance**
Dollar & Howe [1]	SDM Hand	1/4	Compliant joints	Primary inspiration
Ciocarlie & Allen [2]	Columbia Hand	1/8	Tendon + spring	Tendon-driven alternative
Gosselin et al. [3]	Linkage fingers	1/3	Rigid linkage	Analytical framework
This work	CAD model	1/4	Torsional springs + force	Simplified linkage implementation

This work implements a simplified version of the SDM approach using torsional springs in a rigid linkage model, validated through SolidWorks motion simulation.

3 Mechanism Description

3.1 Design Overview

The proposed mechanism is a four-finger underactuated robotic gripper, based on the original SDM Hand design of Dollar and Howe [1]. Each finger consists of three rigid links, proximal, middle, and distal, connected by revolute joints, with the proximal link attached to a central palm structure. The lengths of the three links are $l_1 = 100$ mm, $l_2 = 180$ mm, and $l_3 = 194$ mm respectively. All revolute joint axes are parallel, constraining finger motion to a single plane. The four fingers are arranged symmetrically around the palm, with each finger forming an open kinematic chain from the palm to the distal link tip. The CAD model is seen in Figure 1a.

The gripper employs a 1-actuator-per-finger strategy to achieve underactuated behavior, with a single force applied at the distal link tip directed radially inward toward the central palm axis, simulating tendon actuation as seen in Figure 1a. The force was applied relative to the distal link component with a magnitude of $F = 1$ N, ensuring the force vector rotates with the finger during closure.

In addition to the force vector, torsional springs are placed at each of the three revolute joints to bias each finger toward a closed configuration. Each spring was defined with the upstream link as the base component and the downstream link as the axis direction reference, for the distal joint, the middle link serves as the base component as no further links exist beyond the end effector. Spring direction was set to curl each finger inward toward the palm, counter-clockwise on the left fingers and clockwise on the right fingers as seen in Figure 1b . Spring stiffness was set to $k = 18$ N·mm/deg for the proximal and middle joints, and $k = 5$ N·mm/deg for the distal joint to allow greater compliance at the fingertip. Damping was enabled on all springs with a linear damping type and a coefficient of $C = 15$ N·mm/(deg/s).

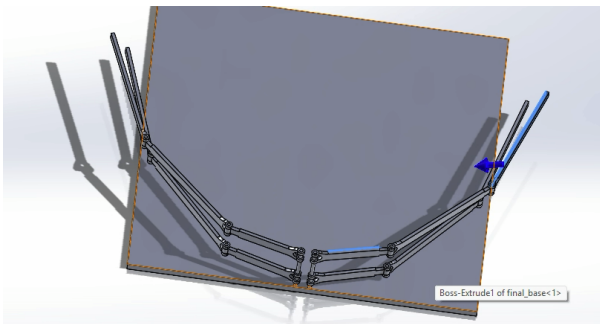

(a) Force Direction SDM

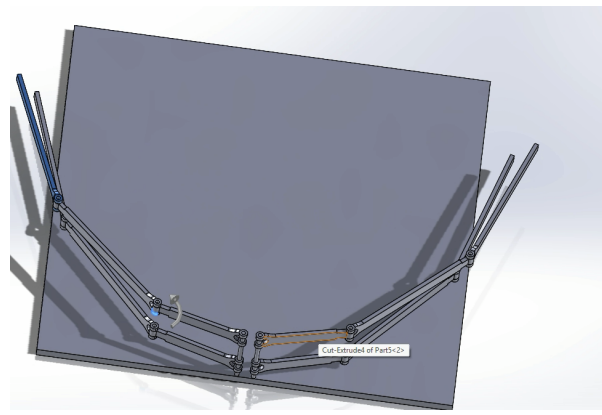

(b) Pinch grasp configuration.

Figure 1: Parameters and Structure of SDM Motion Study

4 Mobility and DOF Analysis

Each finger consists of three links (proximal, middle, and distal phalanx) connected by revolute joints, with the proximal link attached to the palm, giving $n = 4$ and $j_1 = 3$ per finger. The mechanism does not contain closed kinematic chains, so $j_2 = 0$. Although the model is in 3D space, it only uses revolute parallel joints, so the fingers only move in a single plane. Therefore the planar Grübler's formula is appropriate.

$$M_{finger} = 3(4-1) - 2(3) - 0 = 9 - 6 = 3 \tag{1}$$

The full hand consists of four such fingers, yielding a total DOF of:

$$M_{hand} = 4 \times 3 = 12 \tag{2}$$

Of these 12 DOFs, only 4 are actuated, one tendon force applied per finger, leaving 8 passive DOFs. These passive DOFs are governed by the torsional springs at each joint, which bias the fingers toward closure and allow each finger to conform to object geometry without additional actuation. This 1-actuated/3-DOF per finger ratio is consistent with the SDM Hand design of Dollar and Howe [1].

5 Forward Kinematics

The forward kinematics of a single representative finger are computed geometrically, with analysis restricted to the actuated base joint θ_1 as permitted for underactuated systems. Due to the symmetric design, all four fingers follow identical kinematic behavior, differing only in their base orientation relative to the palm.

5.1 Reference Frames and Parameters

The kinematic parameters for a single finger are summarized in Table 2. Each joint angle is measured relative to the previous link, with θ_1 swept across its full actuated range. Meanwhile θ_2 and θ_3 are fixed at there spring free angle configurations/

Table 2: Kinematic Parameters for Single Finger

Link	Length (mm)	Joint Angle	Type
Proximal	100	$\theta_1 \in [0, -47]$	Actuated
Middle	180	$\theta_2 = 30$	Passive
Distal	194	$\theta_3 = 30$	Passive

The end effector position is calculated using the planar serial chain FK equations.

$$x = l_1 \cos\theta_1 + l_2 \cos(\theta_1 + \theta_2) + l_3 \cos(\theta_1 + \theta_2 + \theta_3) \tag{3}$$

$$y = l_1 \sin\theta_1 + l_2 \sin(\theta_1 + \theta_2) + l_3 \sin(\theta_1 + \theta_2 + \theta_3) \tag{4}$$

5.2 Workspace and Range of Motion

Sweeping θ_1 around it's full range of about 50 traces at the end-effector when testing the large box. For the purpose of this analysis, the passive joints θ_2 and θ_3 are held fixed in their spring free angle configuration 30. In practice these joints rotate freely (as seen in section 6) in response to object contact.

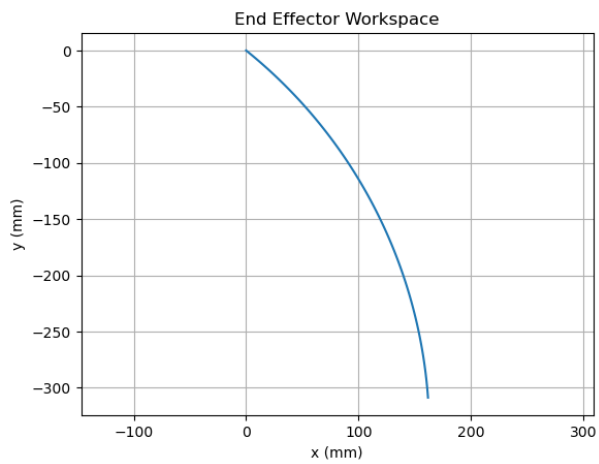

Figure 2: End effector workspace of a single representative finger, swept across the full actuated joint range of 47.

5.3 Singularity Analysis

A singularity occurs when all three links are fully extended and collinear, leading the Jacobian to lose rank and the end effector is unable to move perpendicular to the finger axis. This issue is completely avoided with torsional springs which maintain a non-zero passive joint angle at rest. This keeps the finger in a pre-grasp position away from possible singularities.

6 SolidWorks Motion Study

6.1 Simulation Setup

The spring and force configuration are already mentioned in section 3, for the other parameters included in the simulation. The Material of the box and arms was set to rubber (dry) allowing an increase in friction while mimicking the soft finger pads seen in [1]. The mechanism was tested on 5 different objects, a box, cylinder, oblate spheroid, thinner rectangle,

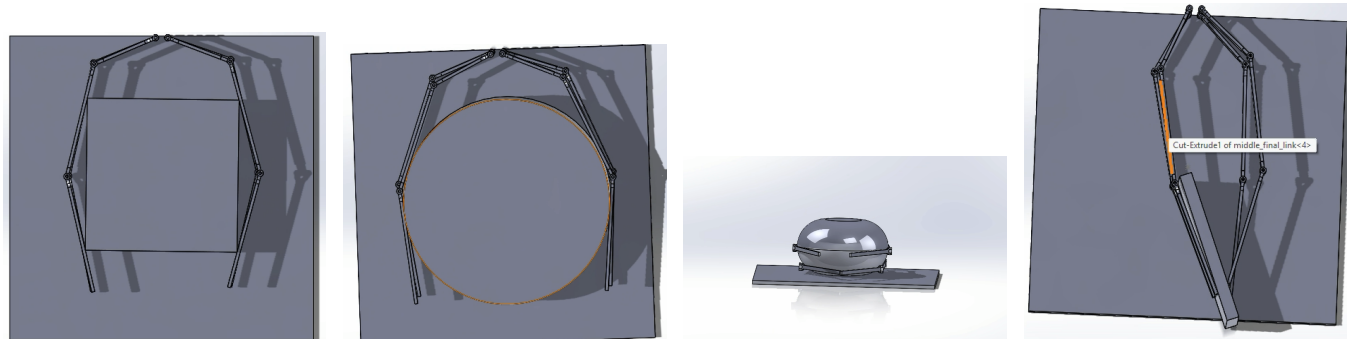

(a) Box (b) Cylinder (c) Oblate Spheroid (d) Thin Rectangle

Figure 3: Motion study results across four object geometries demonstrating adaptive grasping behavior.

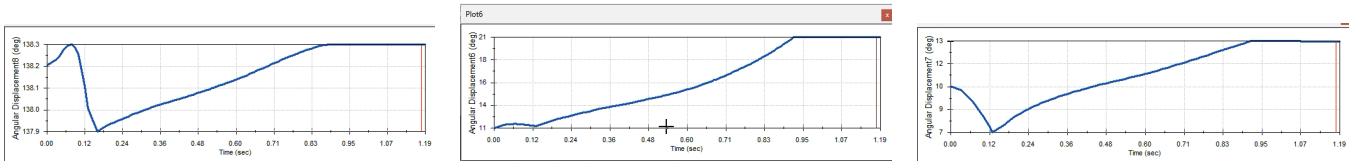

(a) Actuated base joint θ_1 (b) Passive middle joint θ_2 (c) Passive distal joint θ_3

Figure 4: Angular displacement of actuated and passive joints during grasping of the Oblate Spheroid

6.2 Results

7 Discussion

The results demonstrate that the mechanism was able to achieve the adaptive grasping among varied object geometry. The box grasp produced stable and uniform contact distribution. The cylinder best demonstrated the adaptive wrapping behavior. The oblate spheroid presented a challenge with it's curved profile but each arm was able to find a stable configuration. The thin rectangle produced the least uniform contact distribution as each finger had an inconsistent closure rate causing the object to shift until a stable albeit ugly final configuration, persistent and puzzling issue faced in SolidWorks.

The angular displacement plots tell us that the actuated base joint θ_1 has a transient spike, typical of the force overcoming static spring resistance. The passive joints θ_2 and θ_3 demonstrate smooth independent rotation, confirming that the torsional springs successfully transmit closure motion through the kinematic chain.

8 Conclusion

To conclude, the proposed four-finger gripper was able to show adaptive grasping for different object geometries, using a simulated single actuator. This confirms the core principle that passive compliance can substitute for active control in specific situation. Possible extensions for this can include simulating Ma Dollar four-finger hand [4], which allows for finger-gaiting while retaining the passive adaptability.

References

[1] A. M. Dollar and R. D. Howe, "The highly adaptive SDM hand: Design and performance evaluation," *The International Journal of Robotics Research*, vol. 29, no. 5, pp. 585–597, 2010.

[2] M. Ciocarlie and P. Allen, "Hand posture subspaces for dexterous robotic grasping," *The International Journal of Robotics Research*, vol. 28, no. 7, pp. 851–867, 2009.

[3] C. Gosselin, F. Pelletier, and T. Laliberte, "An anthropomorphic underactuated robotic hand with 15 dofs and a single actuator," pp. 749–754, 2008.

[4] R. R. Ma and A. M. Dollar, "An underactuated hand for efficient finger-gaiting-based dexterous manipulation," in *Proceedings of the 2014 IEEE International Conference on Robotics and Biomimetics*, Bali, Indonesia, 2014, pp. 2214–2219.