Design and Performance Analysis of an Electric Motor Drive System for a Four-Seater Electric Golf Cart

A Major Project Report submitted to the

UNIVERSITY INSTITUTE OF TECHNOLOGY

RAJIV GANDHI PROUDYOGIKI VISHWAVIDYALAYA, BHOPAL

in partial fulfillment of the requirements for the award of the degree of

BACHELOR OF TECHNOLOGY

IN

ELECTRICAL & ELECTRONICS ENGINEERING

Submitted by

Anshul Yadav

(0101AU201015)

Under the Guidance of

Dr. Narayan Prasad Gupta

DEPARTMENT OF ELECTRICAL ENGINEERING

UNIVERSITY INSTITUTE OF TECHNOLOGY

RAJIV GANDHI PROUDYOGIKI VISHWAVIDYALAYA

BHOPAL (M.P.)-462033, INDIA

2024

UNIVERSITY INSTITUTE OF TECHNOLOGY

RAJIV GANDHI PROUDYOGIKI VISHWAVIDYALAYA

AIRPORT ROAD, GANDHI NAGAR,BHOPAL (M.P.)-462033, INDIA

DECLARATION OF STUDENTS

I, the student of B.Tech VIII Semester in Electrical & Electronics Engineering Branch, hereby declare that this project report entitled **DESIGN AND PERFORMANCE ANALYSIS OF AN ELECTRIC MOTOR DRIVE SYSTEM FOR A FOUR-SEATER ELECTRIC GOLF CART** submitted in partial fulfillment of the requirement for the award of the Degree of Bachelor of Technology in Electrical & Electronics Engineering Branch, is a work carried out at **University Institute of Technology, Rajiv Gandhi Proudyogiki Vishwavidyalaya, Bhopal** by all members of the project group under the supervision and guidance of **Dr. Narayan Prasad Gupta.**

To the best of our knowledge, the matter embodied in this project report has not been submitted to another University/ Institute for the award of any degree or diploma.

Date: _____

Place: _____

Anshul Yadav

(0101AU201015)

UNIVERSITY INSTITUTE OF TECHNOLOGY

RAJIV GANDHI PROUDYOGIKI VISHWAVIDYALAYA

AIRPORT ROAD, GANDHI NAGAR,BHOPAL (M.P.)-462033, INDIA

BONAFIDE CERTIFICATE

This certificate is issued based on the evaluation of the project report, presentation, and the overall performance of the student in the major project.

Anshul Yadav (0101AU201015)

has met the standards set by the university for the successful completion of the major project and is hereby awarded this certificate.

Date: _____

Place: _____

Dr. Narayan Prasad Gupta
(Assistant Professor)
SUPERVISOR
Electrical Engineering Department
UIT-RGPV, Bhopal

Prof. Vinay Thapar
Head of Department
Electrical Engineering Department
UIT-RGPV, Bhopal

Dr. Sudhir Singh Bhadoria
Director
UIT-RGPV, Bhopal

Abstract

This project focuses on the meticulous design and rigorous performance analysis of an innovative electric motor drive system tailored for a four-seater electric golf cart. With an escalating global interest in sustainable transportation solutions, our research addresses the burgeoning demand for energy-efficient and eco-friendly electric vehicles. The primary objectives include the optimization of the electric motor drive system to enhance overall efficiency, range, and performance metrics. By delving into the historical evolution of golf carts and their contemporary applications, this study contextualizes the project within the broader landscape of electric mobility.

The literature review scrutinizes existing research, identifying key trends, advancements, and potential areas for innovation. Building upon this foundation, the project outlines a comprehensive plan to address specific research objectives. The methodology integrates cutting-edge design principles, simulation tools, and performance evaluation techniques to achieve optimal results. As the project unfolds, it aims to contribute valuable insights to the evolving discourse on electric vehicle technology.

This endeavor aligns with the growing imperative for sustainable transportation solutions and underscores the potential for electric golf carts to transcend their conventional applications. By the project's conclusion, we anticipate not only advancing the understanding of electric motor drive systems but also proposing tangible enhancements that could shape the future of six-seater electric vehicles.

ACKNOWLEDGEMENT

I wish to express my profound gratitude to **Dr. Narayan Prasad Gupta** , Department of Electrical & Electronics Engineering, University Institute of Technology, Rajiv Gandhi Proudyogiki Vishwavidyalaya, Bhopal for his invaluable guidance, sustained help and inspiration in carrying out the work.

I sincerely thank Prof. Vinay Thapar, Head of Electrical & Electronics Engineering Department, UIT-RGPV, Bhopal for his co-operation and guidance during the project work.

I wish to express our deep gratitude to Dr. Sudhir Singh Bhadoria, Director, UIT-RGPV, Bhopal for his kind permission to carry out the work at UIT-RGPV, Bhopal .

I am also thankful to my class friends & family.

Finally I would like to thank all the persons who directly or indirectly helped me in carrying out this project work.

Anshul Yadav (0101AU201015)

TABLE OF CONTENT

Declaration of Student i

Bonafide Certificate ii

Abstract iii

Acknowledgement iv

Table of content v

List of Figures vi

Chapter 1: Introduction 1- 10

1.1 Project Overview 1

1.2 History of golf cart 2

1.3 Challenges and Key Technologies 3

1.4 Overview of Literature Review 5

1.5 Outcomes of Literature Review 6

1.6 Research gap 7

1.7 Research Objectives of the project 9

1.8 Methodology 9

1.9 Layout of Thesis 9

Chapter 2 : Overview of Project 11-13

2.1 Component Analysis 11

2.2 Data Collection 12

2.3 Work Flow Solution of Project 13

Chapter 3 :Motor Analysis 14-25

3.1 Introduction 14

3.2 Motor Analysis 14

3.2.1 Importance of Motor 14

3.2.2 Power Train Of E- Golf Cart 15
3.2.3 Types of Motor Used in EV 15
3.2.4 About Different Types of Motors 16
3.2.5 Calculation Of Motor Parameters 23
3.3 Result and Conclusion……..... 25

Chapter 4 : Controller Analysis 26-31
4.1 Introduction……26
4.2 Controller Analysis 26
4.2.1 Importance of Controller Analysis 26
4.2.2 Types of Controller Used in EV 27
4.2.3 Different Types of Controller available in Market 29
4.3 Result and Conclusion……....31

Chapter 5 : MATLAB Simulation Model of Golf Ca 32-47
5.1 Introduction……32
5.2 Simulation for BLDC Motor……..32
5.3 Result and Conclusion……...47

Chapter 6 : Result and Discussion 48-50
6.1 Result……48
6.2 Discussion……..49

Chapter 7 : Conclusion & Future Scope 51-53
7.1 Specifications and values finalized 51
7.2 Scope of future work 52
References

List of Figures

Fig No.	Figure Name	Page No.
Fig 1.1	Earlier Golf Cart	2
Fig 1.2	Modern Golf Cart	3
Fig 1.3	Schematic Diagram of Golf Cart	9
Fig 2.1	Work Flow Project	13
Fig 3.1	Classification of Electric Vehicle Motors	15
Fig 3.2	DC Motor	16
Fig 3.3	Brushless DC Motor	17
Fig 3.4	PMS Motor	18
Fig 3.5	Induction Motor	20
Fig 3.6	Switched Reluctance Motor	21
Fig 4.1	Golf Cart Diagram	26
Fig 4.2	Classification of Electric Vehicle Motor Controller	27
Fig 4.3	Curtis Controller	28
Fig 4.4	Nanya Controller	29
Fig 5.1	Simulation Model for Golf Cart	32
Fig 5.2	Vehicle Parameters Calculation	33
Fig 5.3	Block diagram of Drive Cycle	34
Fig 5.4	Block Diagram of Longitudinal Driver	35
Fig5.5	Control System Block	36
Fig 5.6	Controlled PWM Block Configuration	37
Fig 5.7	DC MOTOR Block	39
Fig 5.8	DC MOTOR block represents the electrical and torque characteristics of a dc motor	40
Fig 5.9	Vehicle Subsystem Block	40

Fig 5.10	Tire Block Configuration	41
Fig 5.11	Vehicle Body Config	43
Fig 5.12	Battery Subsystem	43
Fig 5.13	Battery Block Configuration	44
Fig 5.14	SoC Estimation Block	45
Fig 5.15	SoC Graph	46
Fig 6.1	Final Project	48

CHAPTER 1: INTRODUCTION AND LITERATURE REVIEW

The transportation sector is at a crossroads, grappling with the need to reduce greenhouse gas emissions and dependence on fossil fuels. Electric vehicles (EVs) have emerged as a promising solution, offering environmentally friendly and sustainable mobility. However, widespread EV adoption is hindered by several challenges, one of the most crucial being the performance and cost of the electric motor drive system.

This research project delves into the design and performance analysis of an electric motor drive system specifically tailored for a four-seater electric vehicle. The primary focus lies on optimizing the system for efficiency, cost-effectiveness, and suitability for the targeted passenger capacity and vehicle performance.

1.1 Project Overview

This report details the design and calculations involved in creating a four-seater, battery-powered electric golf cart. Electric golf carts have transcended their traditional use on golf courses, finding applications in universities, hotels, and modern complexes as a comfortable and affordable transportation option. This project aims to establish an industry-standard design for an electric golf cart capable of navigating diverse terrains, including grass, mud, wet surfaces, and concrete roads.

The design process meticulously considered constraints, cost factors, and technical aspects to ensure compliance with current industry advancements. Battery electric vehicles (BEVs) offer significant advantages over traditional gasoline-powered carts. Their simpler design, with fewer moving parts, eliminates the need for liquid fuel, oil changes, transmissions, and timing belts. This translates to considerably lower maintenance costs compared to internal combustion engines.

Customer Focus and Design Approach

Customer needs and expectations in terms of comfort, reliability, affordability, performance, and range were paramount throughout the design phase. Extensive engineering and reverse

engineering techniques were employed to implement numerous improvements and modifications. A comprehensive SolidWorks model of the entire vehicle was created, incorporating all essential components.

The report delves into the calculations involved in developing the electric transmission using a long four-seat golf cart transaxle. Additionally, it details battery calculations and the role of the controller in monitoring the electrical system. All materials employed in the design adhere to current industry standards.

Design Priorities

This design prioritized maintaining a lightweight yet rigid structure capable of delivering optimal performance on both grassy and concrete terrains, catering to applications in both golf courses and hospitality education sectors. A unique tubular chassis design, utilizing a combination of circular and rectangular shapes, contributes to this goal.

Furthermore, the design prioritizes maximizing range achievable on a single battery charge. The target is to achieve a 60 km range utilizing a 6-pack of deep cycle lead acid batteries.

1.2 History of Golf Carts[7]

The origins of golf carts can be traced back to the 1930s. In the early days, golfers relied on various improvised methods, such as pulling carts or employing caddies to carry their clubs. As golf's popularity surged, the need for a more convenient way to navigate the course became apparent.

The credit for inventing the first electric golf cart goes to Merle Williams in the 1950s. His design aimed to assist senior golfers in traversing the course with greater ease. The quiet operation and user-friendliness of electric carts led to their rapid adoption. The 1960s witnessed the rise of gas-powered golf carts, offering increased power and better suitability for larger courses. Gasoline engines provided a performance boost, allowing carts to cover greater distances without needing a recharge.

Fig 1.1 Earlier Golf Cart

Over time, golf cart designs incorporated features like comfortable seating, weather protection, and dedicated storage for clubs. The basic structure, however, remained consistent: open-air designs for warmer climates and enclosed models for colder regions.

The latter part of the 20th century saw golf carts venture beyond the confines of golf courses. They became popular for personal transportation in retirement communities, industrial settings, and resorts. This versatility fueled their widespread use in various non-golf environments.

Recent decades have been marked by technological advancements shaping the golf cart industry. Electric carts have benefited from improvements in battery technology, leading to extended ranges and shorter charging times. Modern golf carts may even boast features like GPS navigation, entertainment systems, and advanced safety measures.

Fig 1.2 Modern Golf Cart

With the growing focus on sustainability, electric golf carts are experiencing renewed interest due to their potential environmental benefits. Innovations in materials, battery technology, and design continue to propel the evolution of golf carts, making them more efficient, eco-friendly, and adaptable. Today, golf carts transcend their origins as a simple golf course utility, evolving into versatile and sustainable transportation solutions for diverse environments.

1.3 Challenges and Key Technologies[9]

Challenges:

- **Limited Energy Storage Capacity:** A significant hurdle for electric golf carts is their limited energy storage capacity compared to gasoline-powered alternatives. This translates to shorter ranges and more frequent recharging needs.
- **Weight Considerations:** The overall weight of the golf cart significantly impacts its performance and energy efficiency. Heavyweight components can limit range and acceleration.

- **Efficiency and Range Optimization:** Balancing efficiency and range optimization is crucial. Maximizing the efficiency of the electric motor drive system allows for greater range on a single charge.
- **Space Constraints:** Effectively utilizing the available space within the golf cart design presents a challenge. Components like batteries and motors need to be compact while delivering sufficient power.
- **Cost Constraints:** The cost of electric vehicle components, particularly batteries and advanced motors, can be a barrier to wider adoption.
- **Safety Standards and Compliance:** Ensuring the safety of passengers is paramount. Integrating advanced safety features and adhering to stringent industry safety standards are essential.

Key Technologies:

Electric golf carts leverage several key technologies to address the challenges outlined previously:

- **Advanced Motor Technologies:** High-efficiency electric motors with superior power-to-weight ratios are crucial for improved overall performance. Permanent magnet synchronous motors (PMSM) and brushless DC motors are popular choices due to their efficiency and reliability.
- **Battery Management Systems (BMS):** BMS technology is vital for optimal battery health and performance. It ensures proper charging, discharging, and temperature management of the batteries, extending their lifespan and maintaining optimal performance over time.
- **Regenerative Braking Systems:** These systems capture kinetic energy during deceleration and convert it back into electrical energy, boosting overall efficiency and extending the range of the golf cart.
- **Motor Control Algorithms:** Advanced control algorithms, such as field-oriented control (FOC), enhance the precision and efficiency of electric motor operation. FOC, for example, allows for precise control of the motor's magnetic field, leading to smoother performance.

- **Smart Connectivity:** Integration of smart technologies like IoT (Internet of Things) connectivity and telematics enables features like remote monitoring, diagnostics, and software updates. This enhances the user experience by allowing for proactive maintenance and convenient troubleshooting.
- **Materials and Manufacturing Innovations:** Utilizing lightweight yet durable materials, combined with advancements in manufacturing techniques, contributes to weight reduction and improved structural integrity of the golf cart.
- **Simulation and Modeling Tools:** Computer-aided design (CAD) software, simulation tools, and modeling techniques allow for virtual testing and optimization of the electric motor drive system before physical implementation. This saves time and resources during the development process.

1.4 Literature Review on Electric Motor Drive Systems for Electric Vehicles with a Focus on Golf Carts

The literature review explores current research and advancements in electric motor drive systems for electric vehicles (EVs) and golf carts, identifying key themes and technological developments. Barapatre et al. [1] discuss the shift from gasoline engines to EVs, highlighting environmental and economic motivations, and comparing EVs to internal combustion and hybrid vehicles. Jeon [2] examines the market feasibility and future potential of Hybrid Electric Vehicles (HEVs), Plug-In Hybrid Electric Vehicles (PHEVs), and EVs, providing sales forecasts and analyzing the impact of rising fuel prices on vehicle sales in the United States.

Hashemnia and Asaei [3] compare various electric motors, concluding that brushless DC and permanent magnet motors are most suitable for EV applications due to their efficiency and power-to-volume ratio. Hassanin et al. [4] focus on the optimal sizing and operation of brushless DC motors in EVs, while Loganayaki and Kumar [5] emphasize the advantages of Permanent Magnet Synchronous Motors (PMSMs) in high-performance EVs.

Pryymak [6] introduces a novel control algorithm for induction motors to enhance torque and optimize performance, and Mahapatra [7] highlights the importance of energy storage technologies, particularly battery/ultracapacitor hybrid systems, in improving EV efficiency and range. A. C. R. and Ghosh [8] discuss the critical role of battery management systems (BMS) in ensuring safe and efficient battery operation.

De Klerk and Saha [9] review advanced traction motor control techniques to optimize EV powertrains, and Totev et al. [10] explore the concept and benefits of regenerative braking in EVs. Zhao et al. [11] present a control framework for optimizing energy consumption in connected and automated vehicles.

Romo et al. [12] examine lightweight materials and safety features in urban electric vehicles, while Lee et al. [13] provide a critical review of emerging technologies for EVs and HEVs. Sinha and Bangia [14] analyze EV performance under various scenarios, demonstrating the efficiency of brushless DC motors using MATLAB Simulink simulations. Zhao and Jin [15] address the climbing force and battery selection for intelligent vehicles, and Raveena and Berlin [16] propose an algorithm for broadcasting weather reports to urban vehicles.

Zhou et al. [17] propose an integrated driving-charging controller for EVs, enhancing both driving and charging efficiency. Fan [18] explores the integration of solar PV systems into electric golf carts, showing significant energy conservation and extended battery life. Rahman et al. [19] provide formulas for calculating forces on vehicles and explain motor torque characteristics, while Chang and Siao [20] discuss the role of gearboxes in improving torque and efficiency in EV transmissions.

Mohamed and Allam [21] and Balasingam et al. [22] emphasize the importance of lithium-based rechargeable battery packs and the functions of BMS in optimizing battery performance. Gabbar et al. [23] provide a framework for developing new BMS standards to enhance safety and performance. Sanguesa et al. [24] analyze the types and advantages of EVs, the evolution of sales, and advancements in charging technologies, underscoring the importance of battery capacity and smart city requirements in future EV developments.

1.5 Outcome of Literature review

The reviewed literature presents a comprehensive picture of electric vehicles (EVs), including hybrid electric vehicles (HEVs), plug-in hybrid electric vehicles (PHEVs), and their associated technologies. Studies highlight the environmental benefits of HEVs and PHEVs, with improved fuel efficiency and reduced emissions compared to gasoline vehicles. Market factors are shown to influence sales, with a growing shift towards eco-friendly technologies.

Research emphasizes the advantages of EVs, such as efficiency and reduced emissions, while acknowledging challenges related to weight, range, and cost. However, advancements in

battery technology are continuously addressing these limitations. Projects like "ELECTRIC VEHICLE" aim to promote sustainable transportation in developing nations.

The literature review confirms the superiority of permanent magnet and brushless DC motors over induction motors in EVs due to their efficiency and lower pollution levels. Analyses of BLDC and PMSM motors demonstrate their suitability for diverse EV applications, despite cost considerations. Optimized control systems play a crucial role in enhancing EV performance, and Li-ion batteries with hybrid configurations are identified as essential elements for effective design. Simulink modelling is a valuable tool for advancing battery management systems, while regenerative braking offers significant potential for increased range.

Studies explore control architectures for connected and automated PHEVs (CA-PHEVs) to optimize vehicle operation. Research on lightweight EVs tackles design challenges with tailored restraint systems. Overviews of emerging technologies, such as autonomous weather forecasting systems and integrated driving-charging controllers, provide valuable insights for engineers and researchers.

The focus on BLDC motors, energy recovery systems, and performance optimization for tasks like slope climbing and parking aligns with the needs of electric golf carts. The exploration of solar-powered prototypes demonstrates the technical and economic feasibility of sustainable transportation solutions. The breadth of research covered in this review highlights the continuous advancements being made in the development of electric vehicles.

1.6 Research Gaps

1 Enhancing Vehicle Dynamics through Research on Motor Selection

Electric motors like brushless DC motors, permanent magnet synchronous motors (PMSMs), and induction motors each offer unique benefits and drawbacks. However, the impact of these motors on vehicle dynamics, especially under different driving conditions, is not well-studied. Detailed research into how motor characteristics affect acceleration, deceleration, and various loads can optimize motor selection, improving overall vehicle performance and efficiency.

2 Simulation of Electric Golf Carts for Optimizing Powertrain Efficiency

Electric golf carts, though smaller than typical EVs, offer unique opportunities for powertrain optimization. While research has advanced in integrating solar PV systems and battery management, there's a need for using advanced simulation tools to model and optimize the entire powertrain. Simulations can reveal insights into energy consumption, battery life, and system efficiency, leading to more sustainable powertrain solutions.

3 Studies on Transmission Systems, Regenerative Braking, and Control Strategies

Further research on integrating and optimizing transmission systems and regenerative braking can significantly improve energy recovery and vehicle efficiency. Innovative transmission designs and advanced braking techniques, along with sophisticated control strategies, can enhance the responsiveness and efficiency of EV powertrains. New algorithms and control architectures hold substantial potential for these improvements.

4 Studies on Using a Compatible Motor Controller to Regulate Torque Outputs

Motor controllers are vital for managing electric motor performance in EVs. While various control techniques have been explored, there is a need for controllers that precisely regulate torque outputs under varying driving conditions. Research should focus on designing and testing new control algorithms and hardware solutions that enhance motor controller reliability, responsiveness, and efficiency, leading to better vehicle performance and a smoother driving experience.

1.7 Research Objectives of the project

Based on above research gaps, the scope of work defined is to Design and performance analysis of Electrical Motor Drive System for Four-Seated Golf Cart. The goal is to achieve following research objectives which are :

- To investigate the current state-of-the-art in electric motor drive systems for four-seater golf cart.
- To analyze the key factors influencing the efficiency and cost of the system, including motor type, power electronics, and control strategies.

- To design an electric motor drive system for a four-seater Golf Cart, considering factors like vehicle weight, desired range, and performance requirements.

1.8 Methodology

To achieve our desired transmission performance, we will implement a Brushless DC (BLDC) motor with a dedicated controller and a transaxle kit. We will also integrate a custom-built battery bank into the project. A DC-DC converter will provide power for the auxiliary electrical components. Figure 1.3 illustrates the connection schematic for all these electrical and transmission components.

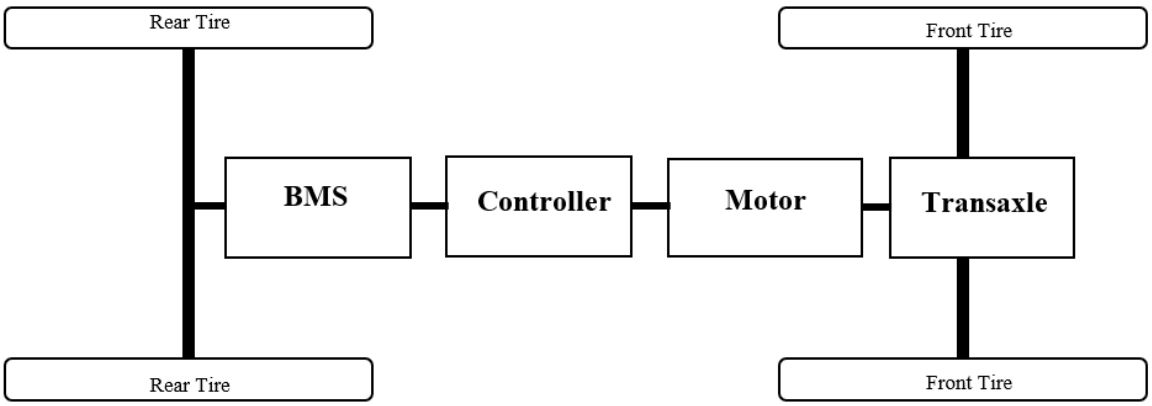

Fig 1.3 Schematic Diagram of Golf Cart

The controller serves as the central unit of the drivetrain. It regulates the DC voltage supplied to the BLDC motor, ensuring optimal performance. The controller receives signals from various components, such as the accelerator pedal and Battery Management System (BMS). The low-voltage cutoff feature within the controller monitors the battery voltage and shuts down the motor if it falls below a safe threshold, protecting the battery from over-discharge.

When the driver presses the accelerator pedal, a signal is sent to the controller. The controller interprets this signal and adjusts the motor power accordingly, resulting in vehicle acceleration. The braking system (to be further explained) will also interact with the controller to ensure smooth deceleration and potentially regenerate energy during braking.

1.9 Report Layout

Based on the provided content of the project report titled "Design and Performance Analysis of an Electric Motor Drive System for a Four-Seater Electric Golf Cart," here is a detailed layout for the project report:

Chapter 1: Introduction provides a comprehensive introduction to the project, including an overview, the historical context of golf carts, the challenges and key technologies involved, an overview of the literature review, the outcomes of the literature review, the identified research gap, the research objectives, and the methodology employed in the study.

Chapter 2: Component Analysis delves into the analysis of the various components used in the electric golf cart. It includes detailed data collection and an explanation of the workflow solution adopted for the project.

Chapter 3: Motor Analysis focuses on the motor, discussing its importance, the power train of the electric golf cart, the types of motors used in electric vehicles (EVs), detailed information about different types of motors, and the calculations of motor parameters. This chapter concludes with the results and a summary of the findings.

Chapter 4: Controller Analysis examines the controllers used in the golf cart. It discusses the importance of controllers, the different types of controllers available for EVs, and the various options available in the market. The chapter concludes with the results of the analysis and a discussion of the findings.

Chapter 5: MATLAB Simulation Model of Golf Cart presents the simulation setup using MATLAB software. It includes the simulation for the Brushless DC (BLDC) motor, detailing the process and the results obtained from the simulation. The chapter concludes with a discussion of the simulation results.

Chapter 6: Result and Discussion provides a detailed presentation of the results obtained from the various analyses and simulations conducted throughout the project. It includes a thorough discussion of these results, interpreting their significance and implications for the design and performance of the electric golf cart.

Chapter 7: Conclusion & Future Scope outlines the final specifications and values that were finalized during the project. It also discusses the potential scope for future work, suggesting areas where further research and development could be undertaken.

CHAPTER 2: OVERVIEW OF PROJECT

As the automotive industry undergoes a paradigm shift towards sustainable transportation solutions, electric vehicles (EVs) have emerged as a promising alternative to traditional internal combustion engine vehicles. Central to the development and optimization of electric vehicles is the thorough analysis of their components. This component analysis plays a pivotal role in understanding the intricate interplay between various elements that contribute to the performance, efficiency, and overall viability of electric vehicles. By scrutinizing each component's design, material composition, manufacturing process, and functional characteristics, researchers and engineers can uncover opportunities for improvement, innovation, and optimization within the electric vehicle ecosystem. This introduction sets the stage for a comprehensive exploration of component analysis in electric vehicles, highlighting its significance in advancing the transition towards a sustainable and electrified automotive future.

2.1 Component Analysis

Designing of Four-Seated Electric Golf Cart needs various component to drive, some important component is discussed.

The Electric Motor[4] is a key component of the golf cart, responsible for converting electrical energy into mechanical power. Analysis of the motor involves assessing its power rating, efficiency, torque characteristics, and size. Factors such as motor type (DC, AC, brushless), cooling requirements, and compatibility with the battery system are considered. Additionally, the motor's durability, noise level, and maintenance requirements are evaluated to ensure optimal performance over the vehicle's lifespan. **The Controller**[17] regulates the flow of electrical energy from the battery to the motor, controlling speed, torque, and direction. Analysis of the controller involves examining its voltage and current ratings, communication protocols, and programmable features. Efficiency, response time, and compatibility with the motor and battery system are key considerations. Additionally, the controller's safety features, such as overcurrent and overtemperature protection, are evaluated to ensure safe and reliable operation. **The Battery**[14][15] system provides the electrical energy required to power the golf cart. Analysis of the battery system involves assessing the battery chemistry (e.g., lead-acid,

lithium-ion), capacity, voltage, and energy density. Factors such as charging time, range, and lifespan are considered. Additionally, the battery management system (BMS), which monitors and controls the battery's operation, is analyzed for efficiency, safety, and compatibility with the motor and controller. **The Transmission system**[10] transfers power from the motor to the wheels, allowing the golf cart to move. Analysis of the transmission system involves assessing the drivetrain configuration, gear ratios, and differential type. Factors such as efficiency, torque multiplication, and smoothness of operation are considered. Additionally, the transmission system's durability, noise level, and maintenance requirements are evaluated to ensure reliable performance. **Vehicle dynamics**[11] analysis involves evaluating the golf cart's handling, stability, and ride comfort. Factors such as suspension design, steering mechanism, and chassis construction are considered. Additionally, factors such as weight distribution, center of gravity, and wheelbase are analyzed to ensure optimal vehicle dynamics for safe and enjoyable driving experience.

2.2 Data Collection

Gathering comprehensive data to forms the foundation for informed decision-making and optimization. This data collection phase entails a meticulous examination of various factors that influence the performance, efficiency, and usability of these critical components.

Firstly, detailed specifications of the electric motor, including its power rating, torque characteristics, efficiency, and cooling requirements, must be obtained to assess its suitability for the intended application.

Similarly, data regarding the controller, such as its voltage and current ratings, communication protocols, and programmable features, are essential for understanding its role in regulating the motor's operation and optimizing energy consumption. Furthermore, collecting information on the transmission system, including gear ratios, drivetrain configuration, and differential type, is crucial for ensuring seamless power delivery and dynamic performance.

Additionally, factors like vehicle weight, aerodynamics, terrain conditions, and intended usage patterns must be considered to tailor the motor, controller, and transmission system to the specific requirements of a 4-seater electric golf cart. By meticulously collecting and analyzing relevant data at this preliminary stage, engineers and designers can lay a solid groundwork for the subsequent optimization and enhancement of the electric vehicle's propulsion system,

ultimately delivering a high-performance, efficient, and reliable mode of transportation for golf enthusiasts.

Max. Speed	25 Km/Hr.
Max Travel	50 Km in Single Full Charge
Slop Gradient	40 Degree Climb 20% Reduces Speed
Weight Capacity	400kg Average & Up To Max 500kg
Cart Weight	390kg
Cart Dimension	12ft Length * 4ft Width * 6.5ft Height

2.3 Work Flow Solution of Project

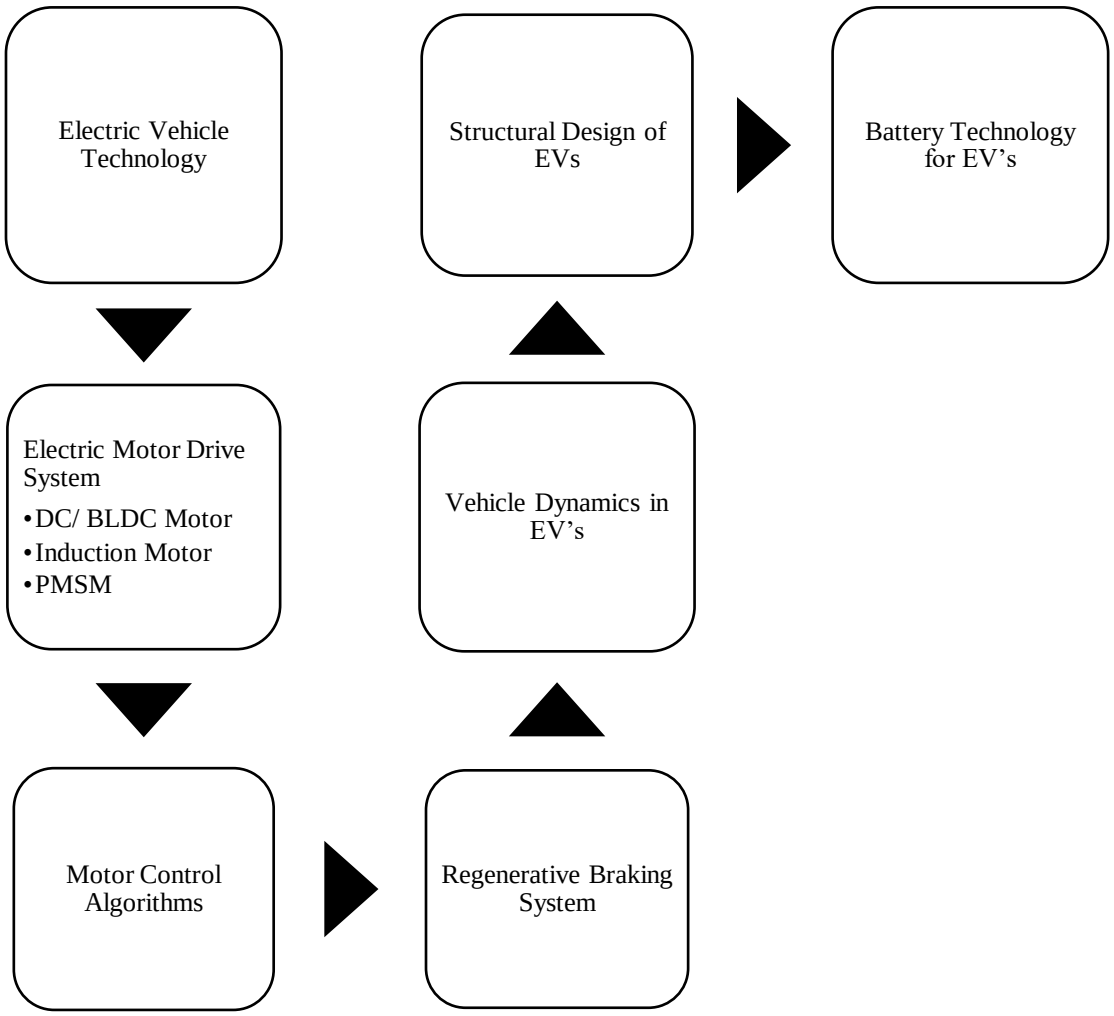

Fig. 2.1 Work Flow Project

CHAPTER 3 : MOTOR ANALYSIS

In this section, we will all the aspect of the motor drive system for four seated electric golf carts. We will analyses all the industry standard equipment, parameter calculation, performance, and other all of Electric Motors.

3.1 Introduction:

In the relentless pursuit of sustainable transportation solutions, electric vehicles (EVs) have emerged as a prominent contender, promising to revolutionize the automotive landscape. At the heart of every electric vehicle lies its propulsion system, with the electric motor serving as the primary source of motive power. The analysis of electric motors for use in EVs is a critical undertaking that involves a comprehensive examination of various performance metrics, design considerations, and technological advancements. This introduction sets the stage for delving into the intricate realm of motor analysis for electric vehicles, emphasizing its pivotal role in shaping the efficiency, performance, and sustainability of modern transportation. By scrutinizing the nuances of electric motor design, operation, and optimization, researchers and engineers can unlock new frontiers in EV technology, accelerating the transition towards a cleaner, greener future of mobility.

3.2 Motor Analysis

3.2.1 Importance of motor analysis in designing e- golf cart[3]

Analysing motors is crucial in the design process of an electric golf cart, playing a pivotal role in ensuring optimal performance and efficiency. This examination is essential for understanding the intricate dynamics of electric propulsion systems, guiding the selection of motor types, and determining design parameters that directly influence the cart's overall functionality. By conducting a comprehensive motor analysis, designers gain insights into factors such as winding configurations, magnetic materials, and cooling systems, allowing them to make informed decisions that directly impact the golf cart's energy efficiency and thermal performance.

Furthermore, the analysis extends beyond mere component selection, incorporating the study of power electronics converters and control algorithms. This broader perspective enables designers to implement advanced strategies, such as predictive control and machine learning algorithms, to adaptively optimize the motor drive's performance in real-time based on varying operating conditions. The exploration of regenerative braking and energy recovery strategies further underscores the importance of motor analysis in enhancing overall system efficiency and extending the range of electric golf carts.

In essence, a thorough motor analysis in the design of electric golf carts serves as the foundation for creating vehicles that not only meet performance expectations but also contribute to the broader goals of sustainability and energy efficiency in the realm of electric transportation.

3.2.2 Power Train of E- Golf Cart

The powertrain of the E-Golf Cart comprises the essential components responsible for its electric propulsion. This includes the electric motor, power electronics, and the battery system. Together, these elements work seamlessly to provide efficient and eco-friendly mobility for the golf cart, ensuring a sustainable and enjoyable driving experience.[1]

3.2.3 Types of motor used in EV

In Electric Vehicles (EVs), various types of motors are employed to facilitate efficient and sustainable propulsion. The commonly utilized motor types include Permanent Magnet Synchronous Motors (PMSMs), Induction Motors, and Switched Reluctance Motors. Each motor variant possesses unique characteristics, making them suitable for diverse EV applications based on factors like efficiency, torque performance, and cost considerations. Understanding and optimizing the specific advantages of these motor types are crucial in advancing the overall performance and adoption of electric propulsion systems in the automotive industry.

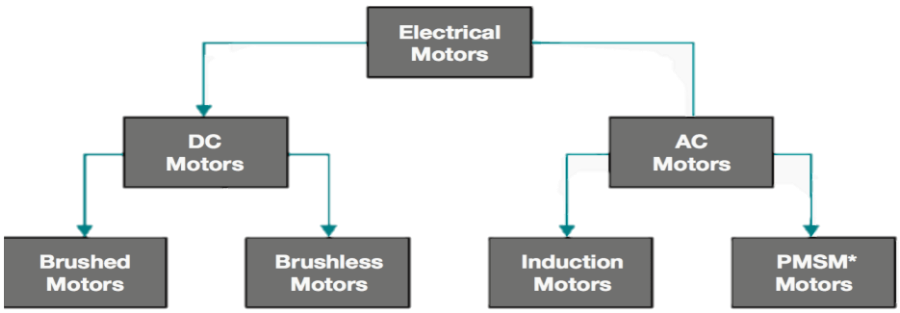

Fig 3.1 : Classification of Electric Vehicle Motors

3.2.3 About different types of motors

A. DC Motor

A principle of DC motor When kept in a magnetic field, a current-carrying conductor gains torque and develops a tendency to move. In short, when electric fields and magnetic fields interact, a mechanical force arises. This is the principle on which the DC motors work. [3]

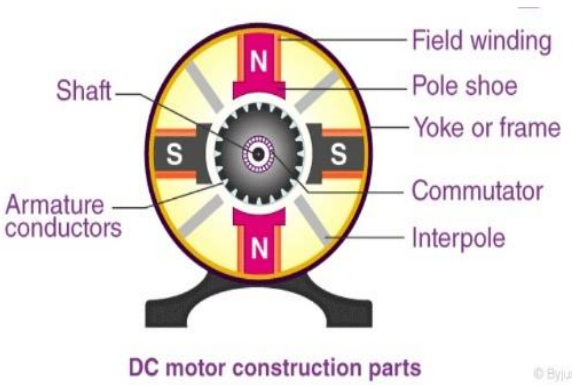

Fig 3.2 : DC Motor

A magnetic field arises in the air gap when the field coil of the DC motor is energised. The created magnetic field is in the direction of the radii of the armature. The magnetic field enters the armature from the North pole side of the field coil and "exits" the armature from the field coil's South pole side.

The conductors located on the other pole are subjected to a force of the same intensity but in the opposite direction. These two opposing forces create a torque that causes the motor armature to rotate.

Advantages of a brushed DC motor:

- Low cost of construction.
- Simple and inexpensive controller.
- No controller is required for fixed speeds.
- The ideal for the extreme environment due to the lack of electronics.
- Two-wire control.
- Rebuild new brush for extended life.

Disadvantages of Brushed DC motor:

- Periodic maintenance is required.
- Less efficient.
- Electrically noisy.
- Poor heat dissipation due to internal rotor construction.
- Higher rotor inertia limits the dynamic characteristics.

- Speed/torque is moderately flat. At higher speed brush friction increases thus reducing useful torque.
- Lower speed range due to mechanical limitation s on the brushes. Brush arcing will generate noise-causing electrical magnetic interference

B. Brushless DC Motor (BLDC)

A brushless DC (BLDC) motor works by using an electronic controller to switch DC currents to the motor windings, which produces a rotating magnetic field. The rotor magnets then follow the rotating magnetic field, causing the rotor to rotate.[4]

In simple terms, a BLDC motor works like a spinning magnet following a moving electric field. The electric field is created by the motor windings, and the magnetic field is created by the rotor magnets.

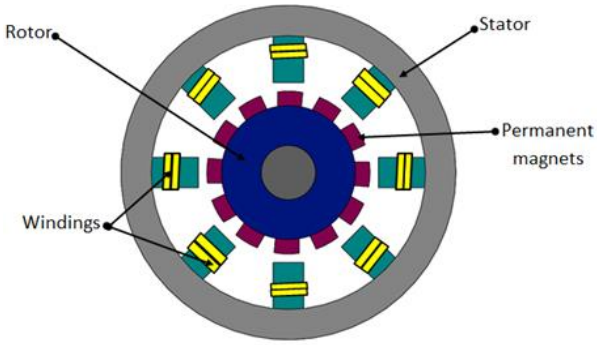

Fig 3.3 : Brushless DC Motor

BLDC motors use electronic commutation to control the rotation of the rotor. The electronic commutation circuit switches the current to the stator windings in a sequence that creates a rotating magnetic field. The rotor magnets then follow the rotating magnetic field, causing the rotor to rotate.

Advantages Of BLDC Motor[4]

- The absence of brushes reduces the frequent replacement of brushes which reduces the maintenance cost.
- It has high-level control over the speed and position of the motor.
- The lifespan of a Brushless DC motor is higher than the brushed DC motor.
- Sparking is reduced due to the absence of brushes and there are a few chances of burnout due to sparking issues.
- It provides high torque to speed ratio.
- As there is no electromagnet in the Brushless DC motor hence the heating issue is being reduced.

- It follows a feedback control system that has the ability to modify and control the speed and torque.
- These motors are suitable to run either in a low load or no load.
- As there are no brushes it produces less operating noise.
- These motors are used in electrical applications where less noise is required.

Disadvantages Of BLDC Motor[4]

- It is operated at relatively low speeds. Due to this low-speed vibration occurs in the system.
- The cost of these motors is high.
- As it consists of a feedback loop the wiring and operation are not that simple.
- It requires an electronic switching controller to switch the voltage to the motor coils.
- As it doesn't consist of the commutator, it will require some special electronic device.
- It needs three hall effect sensors to measure rotor position.

C. Permanent Magnet Synchronous Motor (PMSM)[5]

It is very simple, fast, and effective when compared to conventional motors. The working of PMSM depends on the rotating magnetic field of the stator and the constant magnetic field of the rotor. The permanent magnets are used as the rotor to create constant magnetic flux, operates and locks at synchronous speed. These types of motors are similar to brushless DC motors. The phasor groups are formed by joining the windings of the stator with one another. These phasor groups are joined together to form different connections like a star, Delta, double and single phases. To reduce harmonic voltages, the windings should be wound shortly with each other.[5]

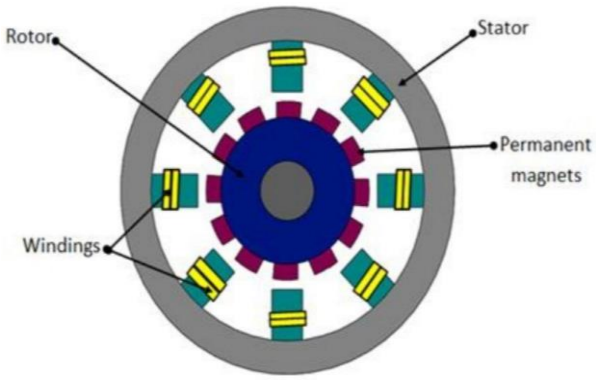

Fig 3.4 : PMS Motor

When the 3-phase AC supply is given to the stator, it creates a rotating magnetic field and the constant magnetic field is induced due to the permanent magnet of the rotor. This rotor operates in synchronism with the synchronous speed. The whole working of the PMSM depends on the air gap between the stator and rotor with no load.

If the air gap is large, then the windage losses of the motor will be reduced. The field poles created by the permanent magnet are salient.

They are not self-starting motors. So, it is necessary to control the variable frequency of the stator electronically.

The advantages of permanent magnet synchronous motor are:

- It has the ability to eliminate field copper losses
- Increased level of power density
- Minimal rotor inertia
- The construction of motor is robust
- Delivers enhanced efficiency
- The output is smooth torque and good dynamic performance

Disadvantages of permanent magnet synchronous motor :

- Higher prices than other types of motors
- It has a demagnetization impact
- These are not self-starting motors
- Loss of flexibility of field flux control

D. INDUCTION MOTOR (IM)[6]

It works on the principle of electromagnetic induction.. As the alternating current flows through the stator windings, it produces a magnetic field around the coils of the windings.

The coils inside the stator are arranged in such a manner (120° apart spatially) that the magnetic field produced by them starts to rotate as a consequence of the periodically reversed direction of input AC.

The rotating magnetic field induces current that flows through the sort circuited windings of the rotor. The flow of current then produces a back emf that opposes the change in the magnetic

field produced by stator windings. The back emf of the rotor windings lags 90 degrees (without load) behind the emf of stator windings.

This difference in force creates torque and causes the rotor to rotate around the axis of the shaft. The lag also causes the rotor windings to rotate a little bit slower than the rotating field. The difference between the speed is known as “slip”

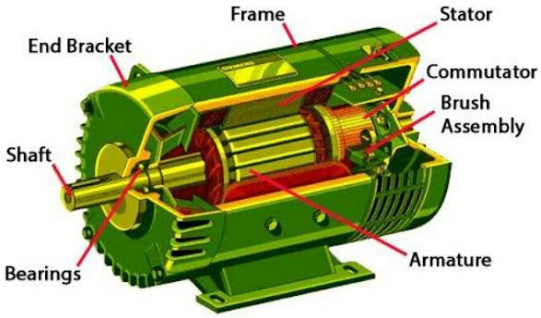

Fig 3.5 : Induction Motor

Advantages

- They have a simple construction and a robust structure that makes them durable and easy to manage.
- The cost of maintenance for low
- They are self-starting and do not require any external mechanism to start the rotation of the rotor. The rotating magnetic field produced by the Y formation of the stator windings is efficient enough to cause the starting torque, which is not the case in single-phase induction motors.
- The splitting of three-phase input AC in a three-phase induction motor causes the distribution of load and makes the motor more efficient in terms of speed-torque characteristics.
- It works on a rotating magnetic field with a uniform magnitude, i.e., the torque production is consistent and not pulsating.
- The steady magnetic field also ensures less vibration of the motor.

Disadvantages

- It draws more current during light load conditions due to the poor power factor. As a result, there is a lot of copper leakage, and the efficiency is low.

- To acquire the speed control more electrical components are required, resulting in a complex electrical mechanism.
- It has a high starting inrush current. This causes a reduction in voltage at the time of starting.

E. Switch Reluctance Motor (SRM)[3][5]

Stator: It has 6 poles, slots are accommodating stator windings which forms 3-phases 1 — 1′, 2 — 2′, 3 – 3’, 3 – 3’ connected is series windings are electrically isolated.

Rotor: It has only round structure

When the supply to the stator winding is switched on; the stator flux is produced. The rotor will position itself such that the stator flux finds the low reluctance path. This is the basis principle of operation of this motor.

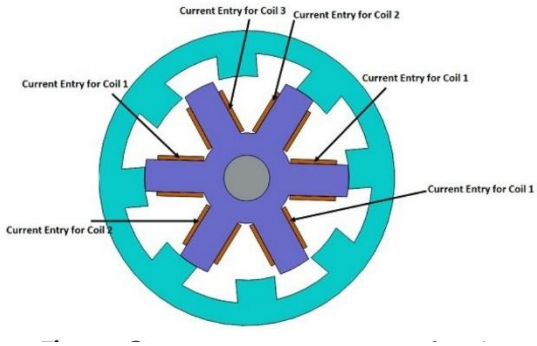

Fig 3.6 : Switched Reluctance Motor

Stator windings are energized in sequence and accordingly rotor rotation and hence the direction of rotation of motor depends. Say for example if the windings are energized in 1, 2, 3, 3…1 sequence naturally rotation is in anticlockwise. But if it is 3, 3, 2, 1, 3 the motor rotates in clockwise direction.

Advantage of SRM

- It does not require an external ventilation system as the stator and rotor slots projected. The airflow maintained between the slots.
- The rotor does not have winding since therefore no need keeps the carbon brush and slip ring assembly.
- Since the absence of permanent magnet, such motors are available at a cheaper price.
- The direction of the motor can be reversed by changing the phase sequence.
- Self-starting and does not require external arrangements.
- Starting torque can be very high without excessive inrush currents.
- High Fault Tolerance
- Phase losses do not affect motor operations.

- High torque/inertia ratio
- High starting torque can be achieved.

Disadvantage of Switched Reluctance Motor

- Creates Torque ripple at high-speed operation
- The external rotor position sensor is required.
- Noise level is high
- At a higher speed, the motor generates harmonics, to reduce this, we need to install larger size capacitors.
- Since the absence of Permanent Magnet, the motor has to designed to carry high input current. It increases the converter KVA requirement.

Comparison between Electric Motors

Characteristic	PMSM	BLDC	Induction	SRM
Cost	High	Medium	Low	Medium
Efficiency	High	High	Medium	High
Torque generated	High	Medium	Medium	High
Speed range	High	High	High	High
Control complexity	Medium	Medium	Low	Medium
Maintenance	Low	Low	Low	Low
Applications	Electric vehicles, robotics, servo drives.	Electric vehicles, drones, fans.	Industrial applications, appliances, power tools	Industrial applications, electric vehicles, aerospace

Table 3.1 Comparison Chart

3.2.5 Calculation of Motor Parameters[3]

The calculation for the electrical and transmission is explained in a detailed and progressive step by step method by Estimated weight

Frame :- 180 Kg (Approx.)

Battery-motor :- 30 Kg

Passengers :- 400 Kg

Gross total :- 600 Kg

1. CALCULATION OF ROAD RESISTANCES

- **Rolling resistance:** Assuming rolling resistance co-efficient of 0.05, which is standard between Tires and Asphalt roads. Assuming gravitational acceleration as 9.81 ms-2.

$$Fr = 600 \times 9.81 \times 0.05$$
$$= 294.3 \text{ N}$$

- **Grade resistance:** Assuming max gradient of 30 degrees, speed humps are designed with a maximum gradient of 6 degrees.

$$Fg = 600 \times 9.81 \times \sin(30)$$
$$= 2934 \text{ N}$$

- **Aerodynamic resistance:** The vehicle is being designed for campus drive and has an average speed of 25 Km/hr. (6.95 m/s). At such low speeds drag resistance can be ignored.

2. POWER REQUIREMENTS

For drive on flat road,

Minimum motor power required

$$P = Fr \times v$$
$$P = 294.3 \times 6.95$$
$$P = 2045.38 \text{ Watts.}$$

Hence, a minimum 2kW-2.5kW motor will be needed to power the vehicle.

3. MAXIMUM POSSIBLE VELOCITIES

At flat road, v = 6.95 m/s

Acceleration force calculations

Designing for an average speed of 6.95 m/s and taking an acceleration time of 10 seconds.

Acceleration = 0.695 ms^{-2}.

$$Fa = M * a$$

$$Fa = 600 * 0.69$$

$$Fa = 414 \text{ N}$$

3.3 Result and conclusion

Result:

After thorough analysis and evaluation of various electric motor options for the 4-seated electric golf cart, several key findings have emerged. Firstly, considering the requirements of the golf cart, including

Passenger Capacity :- 4 seated

Weight :- 600 Kg

A motor with sufficient

Power :- 2kW Motor

is essential. Additionally, factors such as efficiency, reliability, and compatibility with the battery system and controller play crucial roles in the selection process.

Through comparative analysis, it has been determined that a **2 kW BLDC Motor** is exhibits favourable attributes that align with the requirements of the golf cart.

Conclusion:

In conclusion, the selection of the appropriate electric motor for the 4-seated electric golf cart is a critical decision that significantly influences the vehicle's performance, efficiency, and overall user experience. Based on the results of our analysis, the **2 kW BLDC Motor** stands out as the optimal choice for powering the golf cart, meeting the requirements of passenger capacity, weight, and operational needs on golf courses.

CHAPTER 4 : CONTROLLER ANALYSIS

In this section, we will all the aspect of the motor drive system for Four-Seated Electric Golf Cart. We will analyses all the industry standard equipment, parameter calculation, performance, and other all of Electric Motors Controllers.

4.1 Introduction

As the global automotive industry undergoes a transformative shift towards sustainable transportation solutions, electric vehicles (EVs) have emerged as a frontrunner in this evolution. At the core of every electric vehicle lies its propulsion system, orchestrated by an intricate interplay of components, with the electric motor serving as the prime mover. However, the seamless orchestration of this propulsion system is facilitated by a lesser-known yet equally vital component – the electric motor controller. This introduction sets the stage for an exploration into the realm of electric motor controllers for electric vehicles, underscoring their pivotal role in regulating power delivery, optimizing efficiency, and enhancing the overall driving experience. By delving into the intricacies of electric motor controller design, functionality, and integration within EVs, we illuminate a critical aspect of modern transportation technology, poised to accelerate the transition towards a cleaner, greener future of mobility.

4.2 Controller Analysis[17]

4.2.1 Importance of controller analysis in designing e- golf cart[17]

In the realm of electric golf cart design, the importance of controller analysis cannot be overstated. The controller serves as the central nervous system of the vehicle's propulsion system, governing the flow of electrical energy from the battery to the electric motor. Its significance lies in its ability to regulate speed, torque, and direction, thereby dictating the overall performance, efficiency, and user experience of the e-golf cart. Through meticulous controller analysis, designers can optimize various parameters such as voltage and current ratings, communication protocols, and programmable features to tailor the controller's operation to the specific requirements of the golf cart. Additionally, controller analysis enables engineers to ensure seamless integration with other propulsion system components, such as the electric motor and battery system, maximizing overall system efficiency and reliability.

Moreover, by assessing safety features such as overcurrent and overtemperature protection, controller analysis contributes to enhancing the safety and longevity of the e-golf cart, safeguarding both passengers and equipment. Ultimately, a comprehensive understanding of controller functionality and performance is indispensable in designing e-golf carts that deliver optimal performance, efficiency, and user satisfaction on the green.

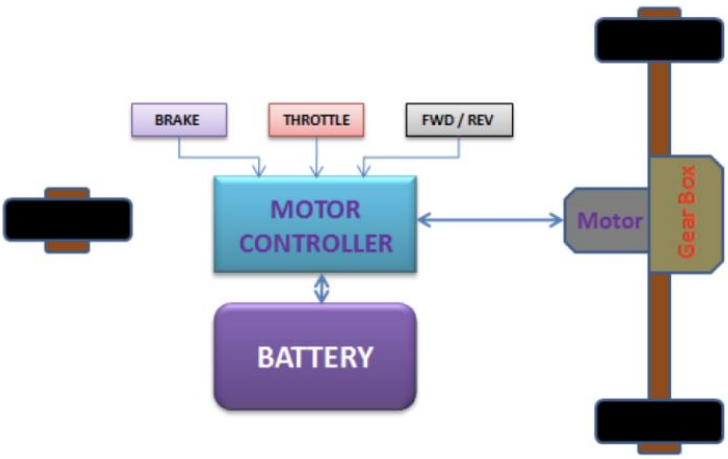

Fig 4.1 Golf Cart Diagram

4.2.2 Types of Controller used in EV[17]

Electric golf carts typically utilize one of several types of controllers to regulate the flow of electrical energy from the battery to the electric motor. Here are some common types of controllers used in electric golf carts:

- **Series Controller:** Series controllers are one of the simplest and most common types of controllers used in electric golf carts. They regulate motor speed by varying the voltage supplied to the motor. Series controllers are known for their reliability and cost-effectiveness but may lack some advanced features found in other controller types.

- **PWM (Pulse Width Modulation) Controller:** PWM controllers regulate motor speed by rapidly switching the voltage supplied to the motor on and off. By adjusting the width of the voltage pulses, PWM controllers control the average voltage and, consequently, the motor speed. PWM controllers are known for their efficiency and precise speed control, making them a popular choice for electric golf carts seeking optimal performance and battery life.

- **Programmable Controller:** Programmable controllers offer greater flexibility and customization options compared to standard series or PWM controllers. These controllers allow users to adjust various parameters, such as acceleration, deceleration, and maximum speed, to tailor the driving experience to specific preferences or requirements. Programmable controllers are often favoured by golf cart enthusiasts and custom builders looking to fine-tune the performance of their vehicles

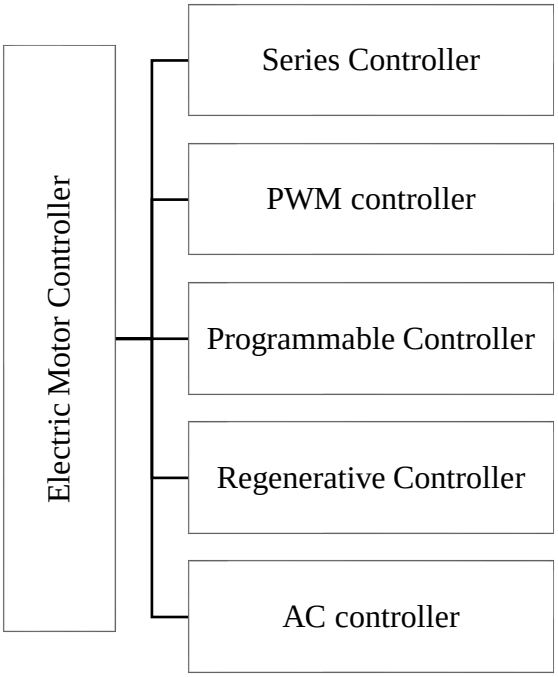

Fig 4.2 : Classification of Electric Vehicle Motor Controller

- **Regenerative Controller:** Regenerative controllers are designed to capture and store energy generated during braking or coasting and use it to recharge the battery. By harnessing this energy, regenerative controllers improve overall efficiency and extend the range of electric golf carts. These controllers are particularly beneficial in stop-and-go driving conditions common on golf courses, where frequent braking and acceleration occur.
- **AC Controller:** Some high-performance electric golf carts may utilize AC (alternating current) controllers, which offer advantages such as higher efficiency, smoother acceleration, and greater torque compared to DC (direct current) controllers. AC controllers are typically found in premium or custom-built electric golf carts seeking enhanced performance and drivability.

In an electric car, several components are interconnected with the controller, forming a cohesive system that ensures smooth operation and efficient performance.

Firstly, **The Accelerator Pedal** serves as the interface between the driver and the electric car's propulsion system. The controller interprets signals from the accelerator pedal to adjust the power output to the electric motor, controlling the vehicle's speed and acceleration.

Additionally**, The Ignition Switch** plays a pivotal role in initiating the startup sequence and activating the electric motor when the vehicle is ready to operate. Through coordination with the ignition switch, the controller seamlessly manages the startup process, ensuring the electric car transitions smoothly into motion.

Moreover, the controller interfaces with **The Push-Pull Button** mechanism used to engage the reverse mode in the electric car. By coordinating the motor's direction of rotation, the controller facilitates safe and efficient reverse movement when needed.

Beyond propulsion, the controller may also manage **Auxiliary Systems** such as headlights, controlling their activation and brightness to enhance visibility during low-light conditions or reduced visibility scenarios. Ultimately, the controller's central role lies in regulating the power supplied to the electric motor, orchestrating its speed, torque, and direction of rotation to propel the electric car forward or backward in response to driver inputs and operational requirements.

4.2.3 Different Types of Controller available in Market

1. Curtis Controller

The 4kw BLDC motor drive is a high performance, cost-effective 4phase BLDC motor drive, which can provide power output Max 210 ah. The design is based on advanced DSP technology and feature high

torque, low noise, low vibration, PID speed loop, PID current loop, over current protection, over load protection and a combined use of manual speed adjustment and automatic speed adjustment.

Fig 4.3 Curtis Controller

These motor controllers are used to control the speed output and rpm set of the motor. It determines the amount of power to be transmitted and the rotational speed of the motor. Since motor is very powerful than its set state this controller provides a stable environment for it and it also controls the idling of the motor.

2. Nanya A-45 Self Diagnostic Controller :-

The A-45 model, produced by Nanya, stands as a pinnacle in electric rickshaw technology, tailored specifically for this mode of urban transportation. Crafted from premium aluminium, it embodies a blend of lightweight construction and robust durability, ensuring resilience against environmental stressors while maintaining an eco-conscious profile. Boasting an impressive efficiency rating of 98%, the A-45 optimizes energy utilization, minimizing wastage and operational costs, thereby enhancing the overall sustainability of electric rickshaw fleets. Operating at a voltage of 48V and a current of 70A, it delivers a formidable rated power output of 1500 Watts, facilitating smooth acceleration and consistent performance across various terrain and load conditions. With a speed limitation capped at 25 kilometers per hour (<=25Kmph), safety remains paramount, particularly in congested urban landscapes. Available in a striking gold colour variant, the A-45 model not only embodies functionality but also adds a touch of elegance to the electric rickshaw's aesthetic appeal. Backed by a 6-month warranty,

Fig 4.4 Nanya Controller

coupled with the option for extended coverage, customers are assured of product quality and reliability. Incorporating a natural air cooling mechanism, the A-45 ensures optimal component longevity and reliability, guaranteeing sustained performance even in demanding operating environments. With a minimum order quantity of 50 units, the A-45 model provides commercial operators and fleet owners with the scalability and flexibility required to meet evolving market demands, reaffirming its position as a trailblazer in electric rickshaw technology.

Product Specification :-	
Application	E Rickshaw
Material	Aluminium
Efficiency	98%
Frequency	50Hz
Model Name	A-45
Brand	Nanya
Voltage	48V
Current	70A
Rated power(W)	1500 Watt
Speed	<=25Kmph

Table 4.1 Product Specification

4.3 Result and Conclusion

After meticulous evaluation and comparison of various motor controller options for the 4-seated electric golf cart, several key findings have emerged. Through comprehensive analysis, it has been determined that a **Nanya A-45 Self Diagnostic Controller** exhibits favorable attributes that align with the requirements of the golf cart.

In conclusion, the selection of the appropriate motor controller for the 4-seated electric golf cart is a critical decision that significantly impacts the vehicle's performance, efficiency, and overall user experience.

CHAPTER 5 : MATLAB Simulation Model of Golf Cart[28]

5.1 Introduction[28]

Battery electric vehicles (BEVs) rely on electric motors for propulsion, with a battery pack storing the energy. While some BEVs use a single electric motor connected to the wheels through a gearbox, others may have multiple motors, like those embedded in the wheels themselves (hub motors).

A battery acts as the car's fuel source, storing energy chemically. This energy is then converted to electricity by a DC/AC converter and delivered to the motor(s) through a control system. This system adjusts the power sent to the motors based on the driver's input through the accelerator and brake pedals. In simpler terms, pressing the accelerator tells the system to send more power to the motors for faster movement, while braking reduces the power for slowing down.

In electric cars, keeping the electric motor compact is a priority. This is achieved by designing them to spin at high speeds, typically between 12,000 and 16,000 rpm for a good balance between size and power. However, during regular driving, car speeds range from 0 to around 130 km/h (and sometimes higher). This translates to wheel speeds of up to 1200 rpm or more.

Here's where gear reduction comes in. A gear system between the motor and wheels acts like a translator, reducing the motor's high speed to a more suitable range for the wheels. This allows for a compact and efficient motor while delivering the necessary power for driving.

Another important component is the differential. This mechanism allows the left and right wheels to spin at slightly different speeds, particularly during turns, preventing tire scrubbing and ensuring smooth handling. The differential can also incorporate a final gear reduction for even finer control over wheel speed.

By combining a high-speed electric motor with gear reduction and a differential, electric vehicles achieve both efficient use of space and effective power delivery for various driving conditions.

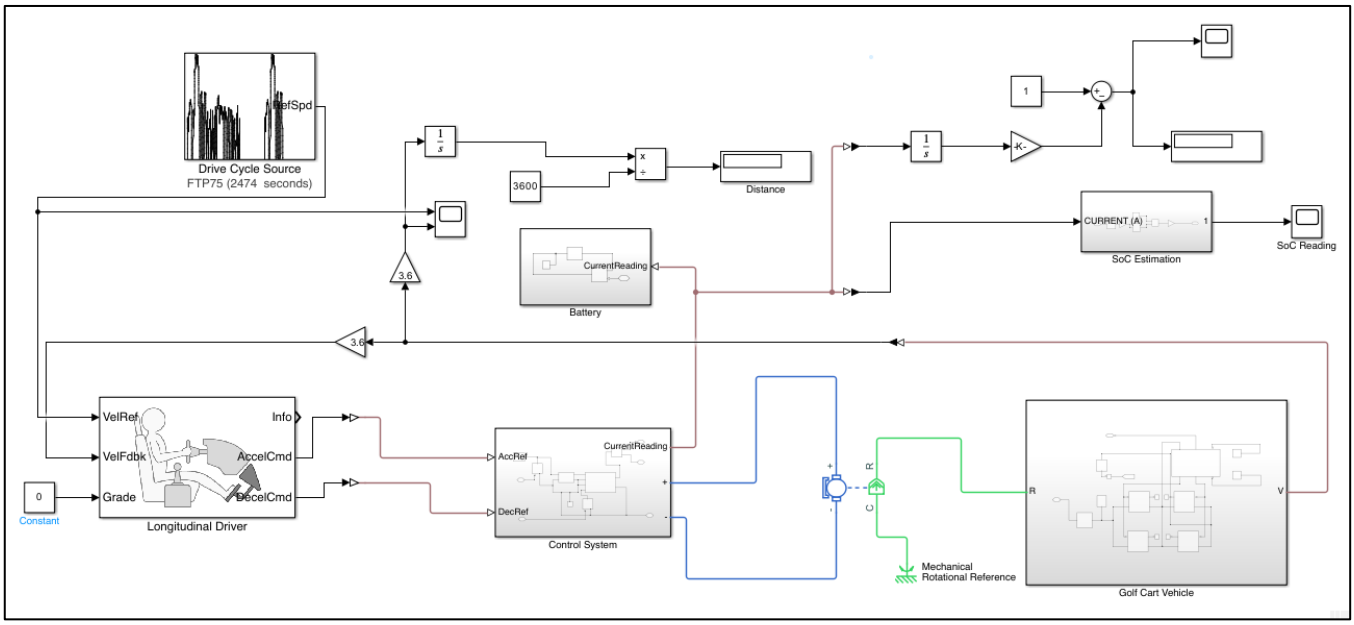

Fig 5.1 Simulation Model for Golf Cart

Model Parameters:

Vehicle Specification

Kerb Weight	390 KG
Payload	400 KG
Coefficient of Rolling Resistance,μ_{rr}	0.015
Frontal Area	2.16
Coefficient of Drag,C_D	0.018
Acceleration Time (0 to 30 kmph)	9 sec
Hill Climb Angle	0°
Transmission Gear Ratio	2:1

Table 5.1 Vehicle Parameters

Vehicle Performance Calculations:

We use our excel calculator for the propulsion power requirement calculations:

Sr. No	PARAMETERS	VEHICLE DATA
1	**Rolling Resistance Calculation**	
	Kerb Weight (M_k)	390
	Payload	400
	Total Weight (M_t) in *Kg*	790
	Coeff of Rolling resistance	0.015
	Rolling Resistance Force (F_{rr}) in *N*	381.4
2	**Air Drag Calculation**	
	Air Density	1.225
	Width in *m*	1.17
	Height in *m*	1.85
	Frontal Area in m^2	2.16
	Drag Coeff C_d	0.18
	Velocity in *m/s*	28
	Air Drag Force (F_d) in *N*	186.7
3	**Acceletation Calculation**	
	Initial Speed *m/s*	0
	Final speed *m/s*	28
	time taken in *seconds*	9
	acceletation in m/s^2	3.12
	acceleration force in *N*	2465
4	**Total Traction Power in kW**	
	$P1 = (F_{rr} + F_d + F_{acc}).V$	84.9268

Fig 5.2 Vehicle Parameters Calculation

[A] Drive Cycle

Our analysis relies on a component called the Drive Cycle Source block. This block can generate standard driving patterns or allow for custom ones that represent a vehicle's travel along a specific path. The block outputs the desired vehicle speed over time

This information is valuable for several reasons:

Predicting Engine Demands: We can estimate the engine torque and fuel consumption required to achieve the specified speed and acceleration, considering a particular gear shift strategy.

Realistic Control Commands: The block can create realistic speed and gear shift references that can be used to simulate closed-loop control systems for acceleration and braking. These simulations mimic real-world driving scenarios for vehicle control and powertrain models.

Optimizing Performance: By running simulations with various drive cycles, we can assess, refine, and improve vehicle control algorithms, overall system performance, and robustness under different driving conditions.

For our study, we've selected two specific drive cycles. The first one is the WLTP Class 2 cycle, which lasts for 1477 seconds.

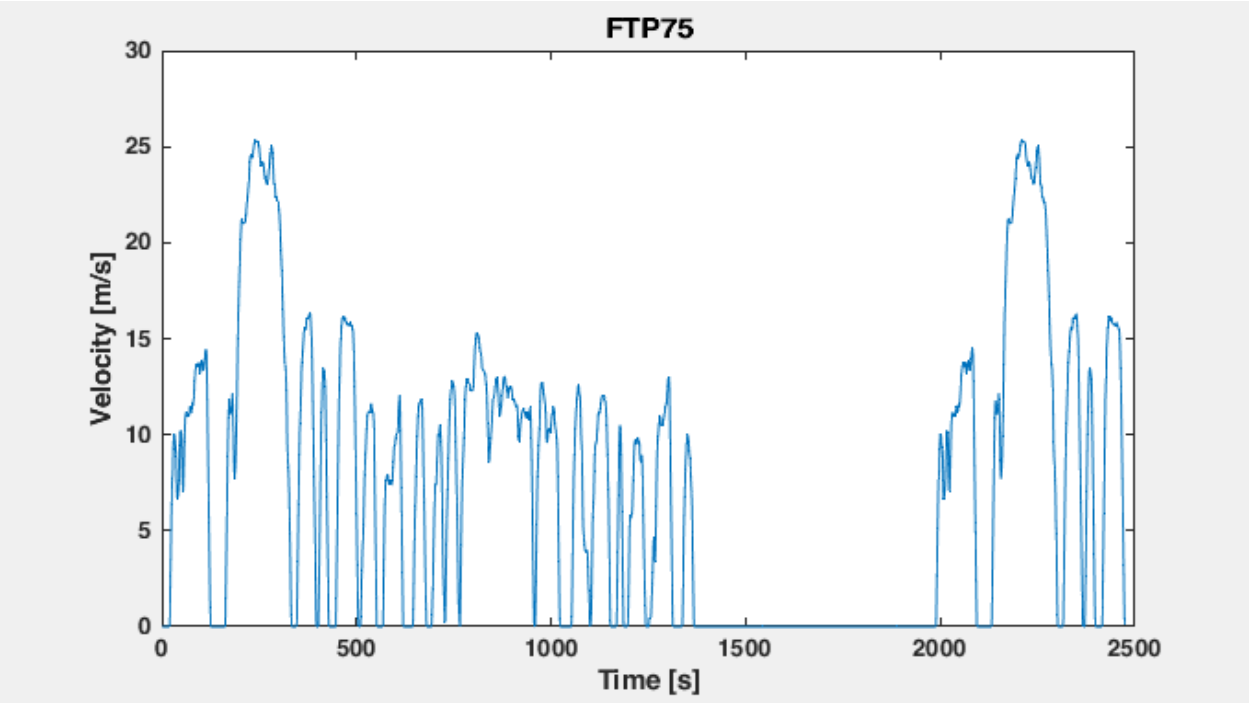

Fig 5.3 Block diagram of Drive Cycle

[B] The Longitudinal Driver Block

This block, called the Longitudinal Driver Block, acts like a virtual driver controlling a vehicle's speed. It takes two inputs:

Desired Speed: This is the reference speed, like the speed limit or a target speed for a specific driving scenario.

Actual Speed: This is the feedback from the vehicle model, indicating how fast it's currently going.

Based on this information, the block generates commands for acceleration (values closer to 1) or braking (values closer to 0). These commands are represented as normalized values between 0 and 1, where 0 signifies full braking and 1 signifies full acceleration.

The Longitudinal Driver Block has two main uses:

Modeling Driver Response: It can simulate how a human driver might react to changes in speed or road conditions. This allows us to test vehicle control systems under realistic driving behavior.

Following a Drive Cycle: The block can also be used to follow a pre-defined driving pattern (like a highway commute or a city traffic simulation) by adjusting acceleration and braking based on the desired speed profile.

In essence, this block helps us simulate how a vehicle would accelerate and decelerate under different driving scenarios.

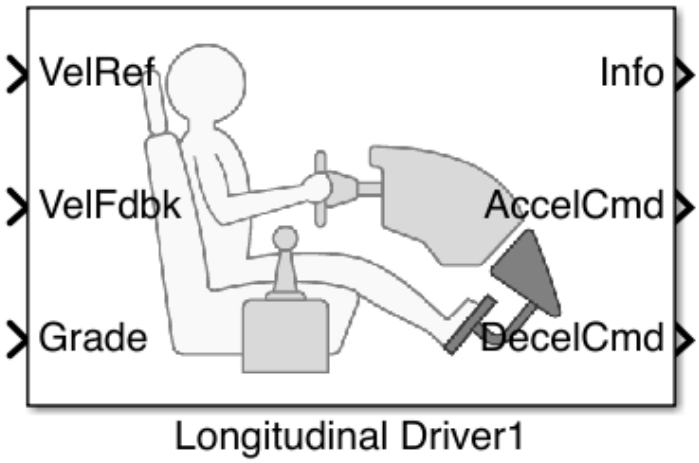

Fig 5.4 Block Diagram of Longitudinal Driver

I. VelRef - Reference Vehicle velocity that is directly connected with the Drive cycle output.

II. VelFdbk - Longitudinal vehicle velocity in the vehicle-fixed frame, or, feedback velocity

III. from the vehicle.

IV. Grade — Road grade angle (constant input in our case)

V. AccelCmd — Commanded vehicle acceleration

VI. DecelCmd — Commanded vehicle deceleration

[C] Control Subsystems

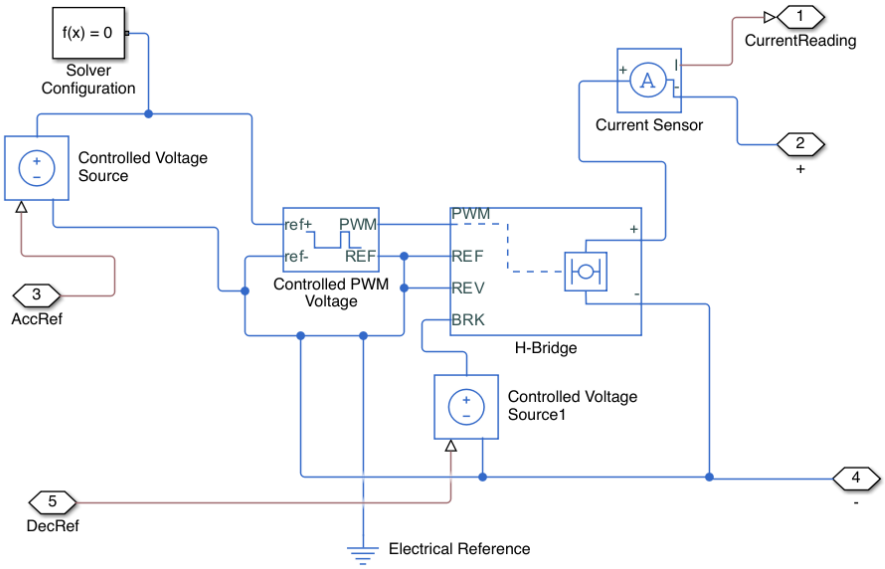

Fig5.5 Control System Block

This section describes the components that control the simulated vehicle's speed.

Voltage Sources for Acceleration and Braking: We use two special blocks called "Controlled Voltage Source" blocks. These blocks take an input signal and translate it into a corresponding voltage output. In our case, the input signal comes from the Longitudinal Driver block, which tells the car how much to accelerate or brake. One block handles acceleration command (higher voltage), and the other handles braking commands (lower voltage).

Pulse-Width Modulation (PWM): Another key component is the "Controlled PWM Voltage" block. This block represents a special type of voltage source called a Pulse-Width Modulated (PWM) source. PWM works by rapidly switching a voltage source on and off, with the ratio

of "on" time to "off" time determining the average voltage delivered. This type of control is commonly used in electric motors to regulate their speed.

For the Electrical input ports variant of the block, the demanded duty cycle is

$$\frac{Vref - Vmin}{Vmax - Vmin} \times 100\%$$

where:

- V_{ref} is the reference voltage across the ref+ and ref- ports.
- V_{min} is the minimum reference voltage.
- V_{max} is the maximum reference voltage.

The value of the Output voltage amplitude parameter determines the amplitude of the output voltage.

At zero, the pulse is initialized as high, unless the Pulse delay time parameter is greater than zero, or the demanded duty cycle is zero.

For a 100% duty cycle, the input voltage is set to 0.01V for accurate mapping of the output signals from the driver block

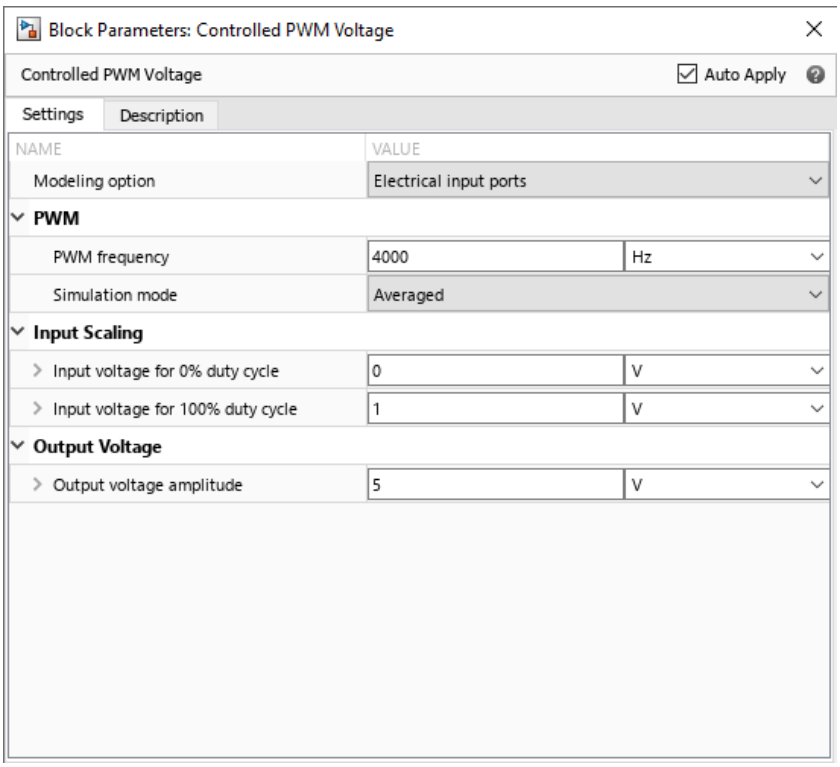

Fig 5.6 Controlled PWM Block Configuration

-The H-Bridge Block

This section introduces the H-Bridge block, which acts like an electronic switch for the electric motor in our simulation. It receives control signals from the "Controlled PWM Voltage" block we discussed earlier. There are two main ways this control can happen:

Pulse-Width Modulation (PWM): This is the preferred mode. The motor gets power only when the voltage from the PWM block is higher than a certain threshold. The higher the voltage, the longer the "on" time for the motor, essentially controlling its speed.

Averaged Mode: This mode uses a more complex calculation. It takes the voltage from the PWM block and divides it by another setting to determine the ratio of time the motor is "on" compared to its total cycle. Based on this ratio and assumptions about how much power the motor needs, the block calculates an average voltage to deliver the desired power.

+ — Positive Load Connection port

- — Negative load connection port

I. PWM — Pulse-width modulated signal (associated with the pulse-width modulated signal.
II. The voltage is defined relative to the REF port)
III. REF — Reference (associated with the floating zero-volt reference)
IV. REV — REV (associated with the voltage that controls when to reverse the polarity of the HBridge block output. The voltage is defined relative to the REF port)
V. BRK — BRK (associated with the voltage that controls when to short circuit the HBridge block output. The voltage is defined relative to the REF port)

The commands from the "Driver" block are measured in millivolts (mV), which are very small voltage units. This means even tiny changes in voltage represent significant changes in how much we want the car to accelerate or brake.

To ensure precise control over the DC motor in our simulation, we need to set the threshold voltages for the H-Bridge block to a very low value. We've chosen 0.01 volts (V) as this threshold. This means that even small changes in the millivolt signals from the Driver block will be effectively translated into motor control actions by the H-Bridge.

-The Current Sensor Block

This section introduces the Current Sensor block, a vital component for monitoring the battery's health in our simulation. It acts like a real-world current sensor, which is a device that measures the flow of electricity in a circuit.

The Current Sensor block has two connection points (labeled "+" and "-") that represent where it's inserted into the simulated electrical circuit. These connection points maintain the flow of current within the simulation.

The key output of this block is a physical signal coming out of the "I" port. This signal represents the current flowing through the battery in the simulation. We'll use this information to determine the battery's State of Charge (SoC), which essentially tells us how much energy remains in the battery.

[C] The DC Motor Block

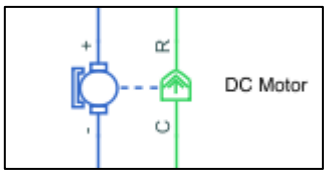

Fig 5.7 DC MOTOR Block

This section describes the DC Motor block, which represents the electric motor in our simulation. It considers both the electrical properties and the torque generated by the motor.

An important assumption made by this block is that there's no loss of electromagnetic energy. Because of this, in SI units (the standard system of units used in science), the values for two key properties - back-electromotive force (back-emf) and torque constant - are identical.

There are two ways to configure this block:

Direct Input: We can directly specify the motor's parameters based on manufacturer data or engineering calculations.

Indirect Calculation: If we only have information about the no-load speed (RPM when the motor is spinning freely) and stall torque (maximum torque the motor can produce), the block can calculate other parameters internally.

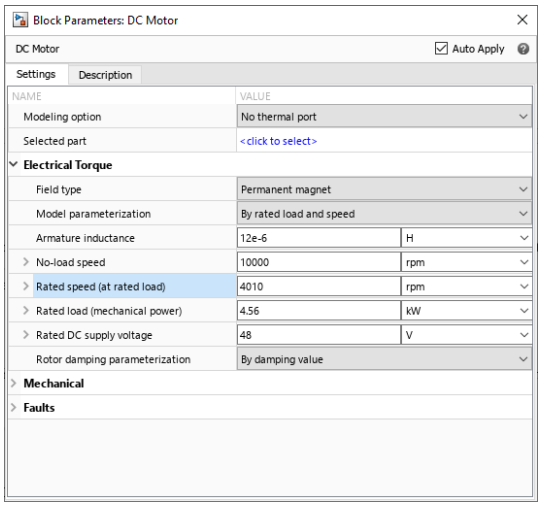

Fig 5.8 DC MOTOR block represents
the electrical and torque characteristics of a dc motor

[D] The Vehicle Subsystems

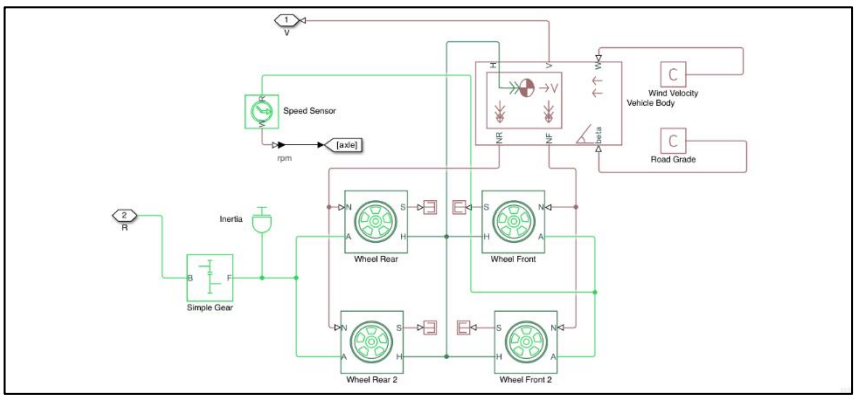

Fig 5.9 Vehicle Subsystem Block

This section dives into two components that add realism to our vehicle simulation:

Gearbox (Simple Gear Block): This block represents a gearbox in the simulated car. It connects the motor's shaft (base gear) to the wheels (follower gear) with a fixed gear ratio. We can choose whether the wheels spin in the same direction as the motor or the opposite direction. In our model, the gear ratio is set to 2:1, meaning the wheels will spin 2 times slower than the motor shaft but with increased torque.

Tires (Magic Formula Blocks): These blocks simulate the behavior of real tires. They rely on an equation called the "Magic Formula" to account for how much grip the tires have on the road under different conditions. This block can handle both constant (e.g., smooth highway) and changing (e.g., bumpy road) road surfaces.

In our simulation, we use four "Magic Formula" blocks, one for each car wheel. Each block is set up with the same tire property values as defined earlier. This ensures consistent tire behavior across all wheels.

Furthermore, the front and rear wheels are connected in pairs within the simulation. This reflects how real cars have two wheels on each axle that move together.

Finally, the simulated gearbox connects to the front axle. This is where power from the motor is delivered to the wheels for driving the car.

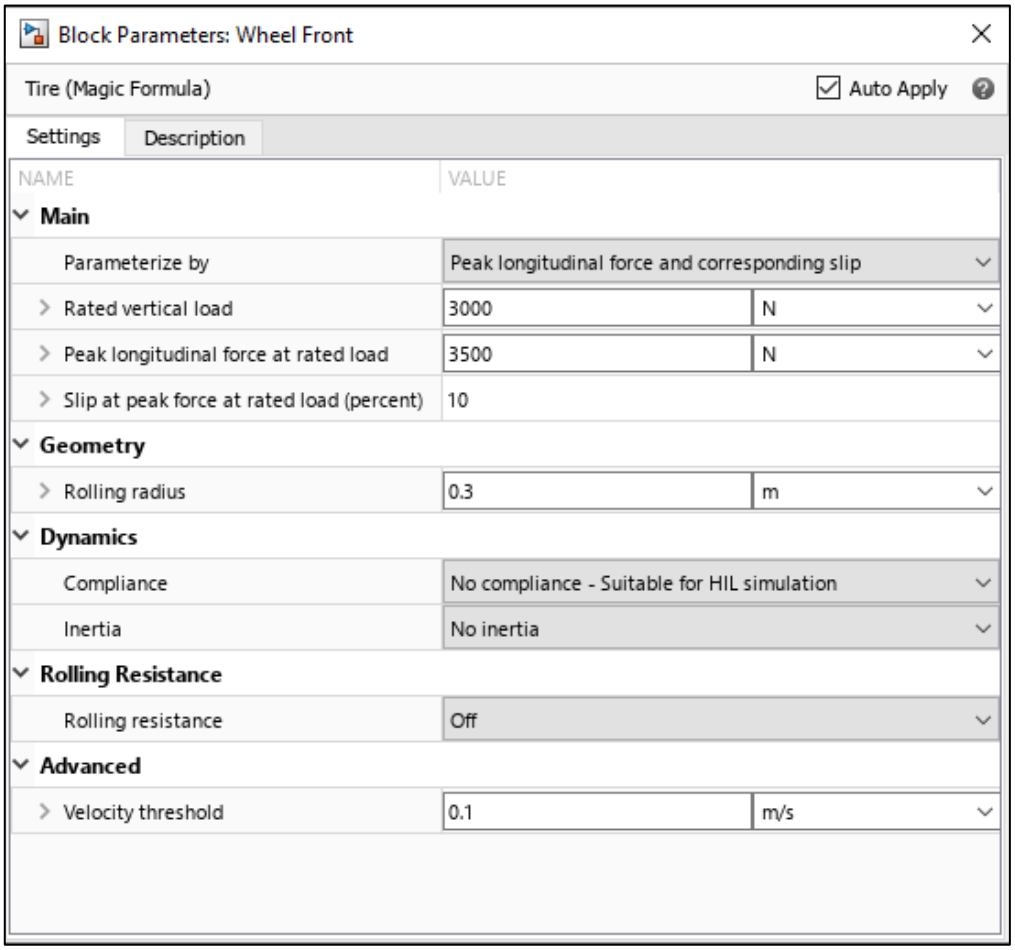

Fig 5.10 Tire Block Configuration

[E] The Vehicle Body Block

This section introduces the Vehicle Body block, which represents the car's chassis and its movement along the road. It assumes a two-axle vehicle design, where each axle can have a different number of wheels (like two in the front and one in the back). The block also considers all the wheels to be identical in size.

The Vehicle Body block considers several factors that affect the car's movement:

Vehicle Weight: The block considers the car's overall mass for realistic acceleration and braking simulations.

Air Resistance: The block factors in air resistance (aerodynamic drag) that affects the car's speed.

Road Inclines: The simulation can account for uphill or downhill slopes that impact the car's movement.

Weight Distribution: The block considers how the car's weight gets distributed between the front and rear axles during acceleration, braking, and driving on uneven roads.

For our simulation, we've entered all the necessary car body parameters as defined earlier. Additionally, we've connected the "Tire" blocks (from the previous section) to the corresponding ports in the Vehicle Body block to represent the wheels attached to the axles.

W — Headwind speed, m/s (Physical signal input port for headwind speed)

beta — Road incline angle, rad (Physical signal input port for road incline angle)

V — Longitudinal velocity, m/s (Physical signal output port for vehicle longitudinal velocity)

NF — Front axle normal force, N (Physical signal output port for normal force on the front

axle. Wheel forces are considered positive if acting downwards)

NR — Rear-axle normal force, N (Physical signal output port for normal force on the rear

axle. Wheel forces are considered positive if acting downwards)

H — Horizontal motion (Conserving port associated with the horizontal motion of the vehicle body. All tires are connected to this port)

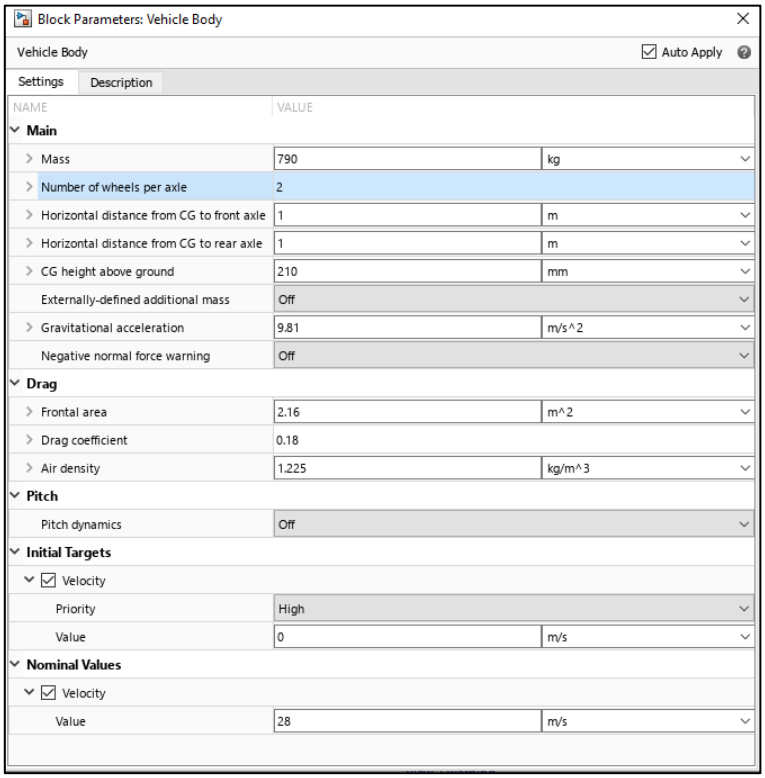

Block Parameters: Vehicle Body

Vehicle Body — Auto Apply

Settings | Description

NAME	VALUE	
Main		
Mass	790	kg
Number of wheels per axle	2	
Horizontal distance from CG to front axle	1	m
Horizontal distance from CG to rear axle	1	m
CG height above ground	210	mm
Externally-defined additional mass	Off	
Gravitational acceleration	9.81	m/s^2
Negative normal force warning	Off	
Drag		
Frontal area	2.16	m^2
Drag coefficient	0.18	
Air density	1.225	kg/m^3
Pitch		
Pitch dynamics	Off	
Initial Targets		
Velocity		
Priority	High	
Value	0	m/s
Nominal Values		
Velocity		
Value	28	m/s

Fig 5.11 Vehicle Body Config

[F] Battery Subsystem

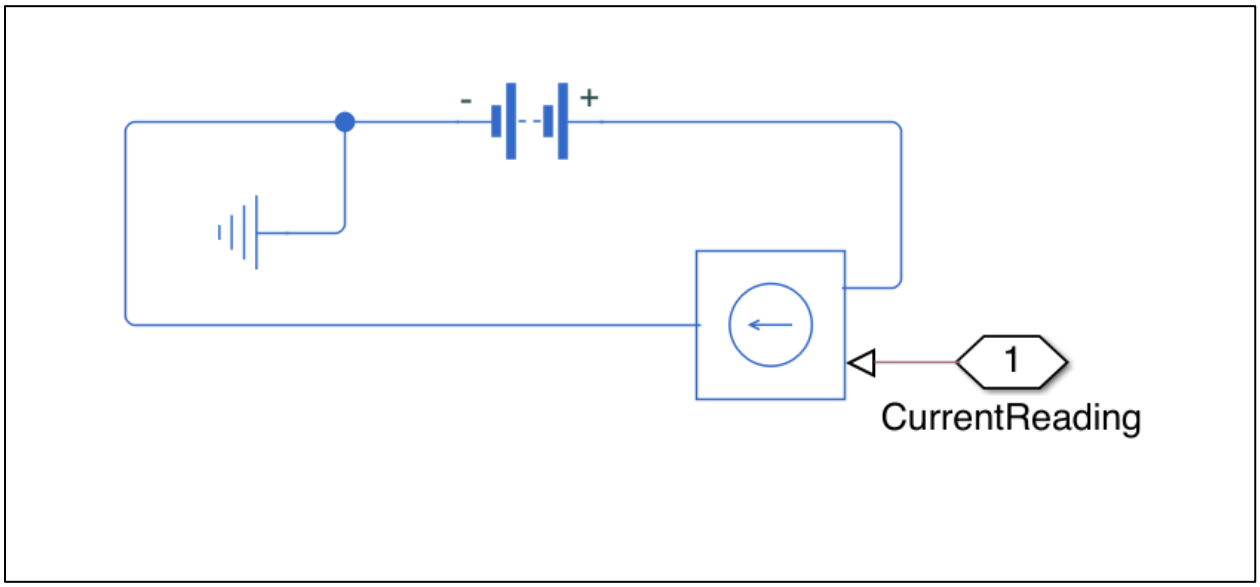

Fig 5.12 Battery Subsystem

This section details two components that represent the car's battery in our simulation:

Controlled Current Source Block: Imagine this block as an ideal battery with unlimited power. It can maintain a constant current regardless of the voltage across it. The current flowing out is controlled by a signal from the control system, essentially dictating how much power the battery delivers. An arrow on the block indicates the positive direction of current flow.

Battery Block: This block represents a simplified model of a real battery. The voltage output of this block depends on the remaining charge level. As the battery discharges (loses charge), the voltage drops

$$V = V_0\left(\frac{SOC}{1-\beta(l-SOC)}\right)$$

For our simulation, we've configured the Battery block based on the specifications of the Golf Cart's battery pack. The battery has a capacity of 2.4 kWh (kilowatt-hours) and operates at a nominal voltage of 48V. Based on these values, we've also calculated the Ampere-hour (Ah) rating to be 110 Ah. All these values have been entered into the Battery block for an accurate representation.

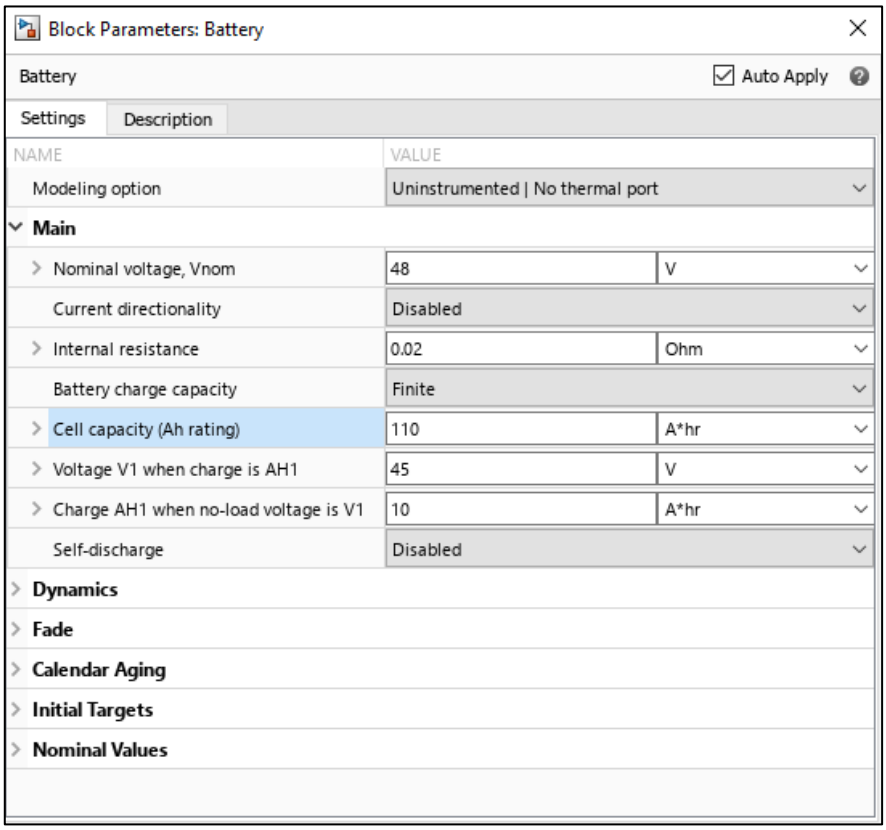

Fig 5.13 Battery Block Configuration

[G] The SoC Estimation Subsystem

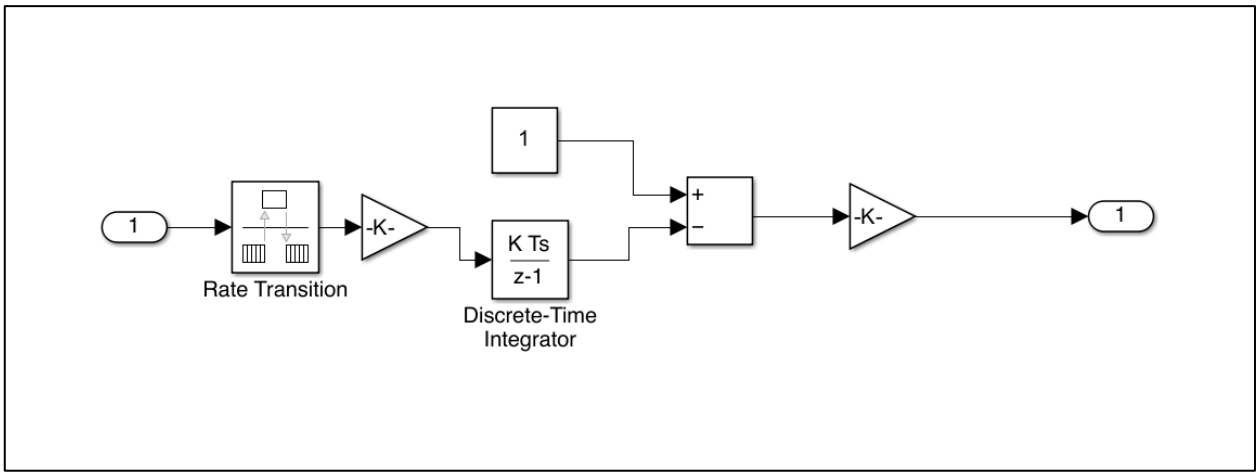

Fig 5.14 SoC Estimation Block

This section explains how we estimate the remaining charge in the battery (State of Charge or SoC) within our simulation. The block responsible for this is called the "SoC Estimator Block".

This block uses a method called Coulomb Counting. It works by connecting several simpler blocks in a specific order:

Rate Transition Block: This block adjusts the incoming signal (likely battery current) to match the sampling rate of the simulation.

Gain Block: This block amplifies or weakens the signal based on a set value. In this case, it might convert the current data into units suitable for calculating charge.

Discrete-Time Integrator Block: This block keeps track of the running total of the adjusted current signal over time. Since current flow into the battery represents charging and current flow out represents discharging, this integration essentially estimates the change in the battery's charge level.

Constant Block: This block adds a fixed value to the integrated current signal. This value might account for any initial charge present in the battery at the start of the simulation.

By summing the outputs of all these blocks, we get an estimate of the battery's SoC. While this Coulomb Counting method has limitations, it's sufficient for our current simulation purposes.

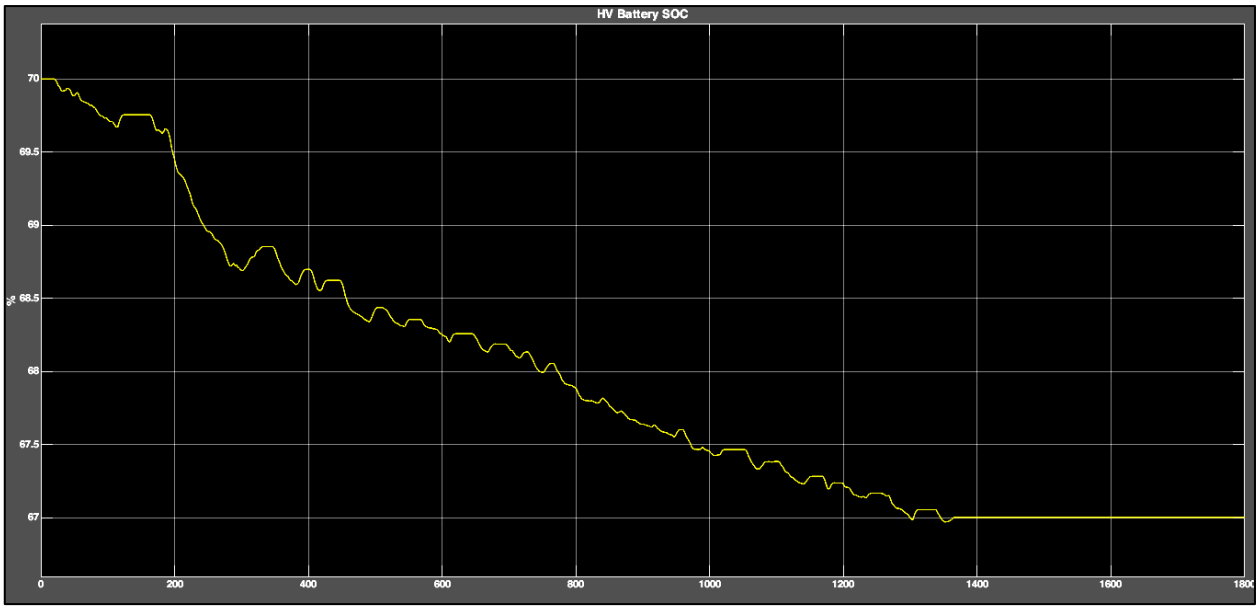

Fig 5.15 SoC Graph

5.3 Result and Conclusion

Electric Vehicle Powertrain Model: We successfully designed a model of an electric vehicle powertrain. This model includes all the essential components and their parameters documented for future reference.

Simulation Insights: While the simulation may not perfectly reflect real-world conditions due to necessary assumptions, it still provides valuable insights into the behavior of the electric vehicle powertrain. These insights are helpful despite the limitations.

Satisfactory Model Performance: The model we built delivered useful results, which were documented for further analysis and potential application.

CHAPTER 6 : RESULT & DISCUSSION

6.1 Results

The project focused on the design and performance analysis of an electric motor drive system for a four-seater electric vehicle, specifically a golf cart. The results obtained from various analyses and simulations are summarized as follows:

1. **Motor Selection**:
    - A detailed analysis of various motors concluded that a 1.5 KW Brushless DC (BLDC) motor is the optimal choice for the golf cart. This motor meets the requirements of the golf cart, including the passenger capacity of 4 and a total weight of 600 kg .
2. **Power Requirements**:
    - The calculations for the power requirements were based on factors such as rolling resistance, grade resistance, and the desired speed of the vehicle. It was determined that a motor with a power range of 1.5-2 KW is necessary to ensure smooth operation under typical conditions .
3. **Controller Analysis**:
    - The selection and analysis of the motor controller highlighted the importance of choosing a controller that could effectively manage the power delivery to the motor. The analysis included different types of controllers available in the market, with a focus on those suitable for electric vehicles .
4. **Battery Specifications**:
    - The battery pack for the golf cart was specified with a capacity of 2.4 kWh and a nominal voltage of 48V. The ampere-hour (Ah) rating was calculated to be 110 Ah, which is adequate for the intended use of the vehicle .
5. **Simulation Results**:
    - MATLAB simulations were conducted to model the performance of the BLDC motor. The simulation results, while not perfectly reflecting real-world conditions due to necessary assumptions, provided valuable insights into the behaviour of the motor and the overall powertrain. The state of charge (SoC) estimation and other performance metrics were graphically represented and analysed .

Final Project

Fig 6.1 Final Project

6.2 Discussion

The results obtained from the analyses and simulations offer several significant insights into the design and functionality of the electric golf cart's drive system. The discussion section delves into the implications of these findings and how they contribute to the broader field of electric vehicle technology.

1. **Motor Efficiency and Performance**:
    - The selection of a 1.5 KW BLDC motor is justified by its efficiency, reliability, and compatibility with the battery and controller systems. This motor is well-suited for the operational needs of a golf cart, providing sufficient power while maintaining energy efficiency. This choice aligns with the project's goal of optimizing performance and cost-effectiveness .
2. **Controller Integration**:
    - The role of the motor controller is critical in regulating speed, torque, and direction, thus ensuring smooth and efficient operation. The analysis of various controllers highlighted the importance of selecting one that offers programmable features and robust performance. The chosen controller

complements the BLDC motor, enhancing the overall driving experience and operational efficiency of the golf cart .

3. **Battery Performance**:
    - The specified battery pack and its configuration play a crucial role in the performance of the electric golf cart. The 2.4 kWh capacity and 48V nominal voltage are adequate for the vehicle's requirements. The accurate estimation of SoC using Coulomb Counting in the simulations helps in understanding the battery's performance and lifespan under different operating conditions .
4. **Simulation Insights**:
    - The MATLAB simulations provided a platform to model and analyse the behaviour of the electric powertrain. Although real-world conditions might introduce variables not accounted for in the simulations, the insights gained are valuable for further refinement and development of the system. The results validate the design choices and highlight areas for potential improvement, such as enhancing the accuracy of the SoC estimation and optimizing the power delivery system .

5. **Future Implications**:
    - The findings of this project contribute to the ongoing discourse on electric vehicle technology, particularly in the context of small, utility-focused vehicles like golf carts. The successful design and analysis of the electric drive system demonstrate the feasibility of transitioning from conventional to electric vehicles in this category. This research lays the groundwork for future advancements and improvements in the efficiency and performance of electric golf carts .

In conclusion, the project has successfully achieved its objectives by designing and analysing an efficient electric motor drive system for a four-seater electric golf cart. The insights gained from this research have significant implications for the future of sustainable transportation solutions

CHAPTER 7 : CONCLUSION & FUTURE SCOPE

7.1 Specifications and Values Finalized

Under the premise of in the world advocate environmental protection, under the national macro control, and in the rapid development of private economy today, in the near future, gas-powered car gradually replaced by an electric car. And the research and development of electric vehicles need absorb the essence of the structure design of gasoline cars. For the golf stadium, the research and development of special vehicles was not exceptional also to make it more environmental protection, comfortable, reasonable structure. In this paper, the scheme, structure design, and parameter checking were reasonable, and to meet the needs of the body. the vehicle design can meet the demand of golf stadium environment.

Specification	**Values**
Motor Type	Brushless DC Motor
Rated Power	1.5 KW
Rated Voltage	48V
Peak Current	90-110Amps
Continuous Current	65Amps
Controller	Nanya A-45 Self Diagnostic Controller
Transaxle	44 inch MS type

Table 7.1 Final Parameters

The following points are:

1) A lot of market research went into the design of the electric golf cart and desirable results were achieved.

2) A new design for knuckle was made.

3) Finalizing the design of the chassis and trying to innovate with different pipe sizes and shapes gave a unique looking cart with considerable strength and balance.

4) An excellent range of mileage of 60 km is obtained for such a heavy vehicle with lead acid batteries.

5) The performance of overall vehicle including its speed, braking distance and turning radius were achieved under the pre-set assumed values.

6) The suspension design was selected carefully to give the best performance in overloading conditions as well and the leaf spring to provide more support in case of heavy luggage/materials kept behind.
7) The transaxle ratio of 10.45 gives the most optimum output with the coupled motor and the cart is able to climb fully loaded in grassy/muddy terrain with 20% inclination as per design.
8) The batteries being heavy and placed below the seats makes the majority of the weight carried by the cart at low height even after passenger is seated which gives the entire cart a very low roll centre which reduces the chance of cart rolling during uneven terrains.

7.2 Scope of Future Work

The Future Work Scope for the Electric Motor Drive System in a Four-Seater Electric Vehicle are

1. Enhanced Efficiency Optimization:

- Investigate advanced control algorithms and motor designs to further optimize energy efficiency, maximizing the overall range and performance of the four-seater electric vehicle.

2. Smart Energy Management Systems:

- Develop intelligent energy management systems that dynamically allocate power to different vehicle components, considering factors such as driving conditions, battery state-of-charge, and user preferences.

3. Integration of Energy Recovery Technologies:

- Explore and implement innovative energy recovery technologies, such as advanced regenerative braking systems or energy-harvesting mechanisms, to further harness and utilize wasted energy during deceleration.

4. Modular and Scalable Design:

- Work on designing a modular and scalable electric motor drive system, allowing for flexibility in adapting the technology to different vehicle models, sizes, and applications within the electric vehicle portfolio.

5. Advanced Thermal Management:

- Research and implement advanced thermal management solutions to enhance the cooling efficiency of the electric motor and associated components, ensuring optimal performance under varying operating conditions.

6. Integration with Vehicle-to-Grid (V2G) Technology:

- Explore the feasibility of integrating Vehicle-to-Grid (V2G) technology, enabling bidirectional energy flow between the electric vehicle and the grid. This can contribute to grid stability and support sustainable energy practices.

7. Machine Learning Applications:

- Investigate the application of machine learning algorithms for predictive maintenance, fault detection, and real-time optimization of the electric motor drive system, enhancing reliability and reducing downtime.

8. Human-Machine Interface (HMI) Innovations:

- Focus on the development of user-friendly and intuitive Human-Machine Interface (HMI) features, providing drivers and passengers with real-time feedback on energy consumption, battery status, and driving efficiency to promote eco-conscious driving habits.

These future work directions aim to advance the electric motor drive system's capabilities, making it more efficient, adaptable, and user-friendly in the context of a four-seater electric vehicle. This research will contribute to the ongoing evolution of electric vehicle technology, addressing emerging challenges and furthering sustainable mobility solutions.

REFERENCES

[1]. Barapatre, D., Kanfade, C., Bari, A., Nile, R., Wagh, R., & Nimbalkar, R. (2018). "Electric Vehicle Technologies" International Journal of Engineering Research and Technology (IJERT), Volume 4, Issue 30 (IC-QUEST – 2016), Paper ID: IJERTCONV4IS30052, ISSN (Online): 2278-0181, Publisher: IJERT. Published online on April 24, 2018.

[2]. Hybrid & Electric Vehicle Technology and its market feasibility by Sang Yeob Jeon (S.M. in System Design and Management)--*Massachusetts Institute of Technology, Engineering Systems Division*, 2010.

[3]. N. Hashemnia and B. Asaei, "Comparative study of using different electric motors in the electric vehicles," 2008 18th International Conference on Electrical Machines, Vilamoura, Portugal, 2008, pp. 1-5, doi: 10.1109/ICELMACH.2008.4800157.

[4]. M. A. Hassanin, F. E. Abdel-Kader, S. I. Amer and A. E. Abu-Moubarka, "Operation of Brushless DC Motor to Drive the Electric Vehicle," 2018 Twentieth International Middle East Power Systems Conference (MEPCON), Cairo, Egypt, 2018, pp. 500-503, doi: 10.1109/MEPCON.2018.8635158.

[5]. A. Loganayaki and R. B. Kumar, "Permanent Magnet Synchronous Motor for Electric Vehicle Applications," 2019 5th International Conference on Advanced Computing & Communication Systems (ICACCS), Coimbatore, India, 2019, pp. 1064-1069, doi: 10.1109/ICACCS.2019.8728442.

[6]. B. Pryymak, "Induction Motor Control System of Electric Vehicle with Improved Dynamics in Field Weakening Region," 2019 IEEE 2nd Ukraine Conference on Electrical and Computer Engineering (UKRCON), Lviv, Ukraine, 2019, pp. 615-620, doi: 10.1109/UKRCON.2019.8880012.

[7]. U. Mahapatra, "Energy Storages and Technologies for Electric Vehicle," 2021 Innovations in Energy Management and Renewable Resources(52042), Kolkata, India, 2021, pp. 1-3, doi: 10.1109/IEMRE52042.2021.9386526.

[8]. A. C. R and A. Ghosh, "Battery Management System in Electric Vehicle," 2021 4th Biennial International Conference on Nascent Technologies in Engineering (ICNTE), NaviMumbai, India, 2021, pp. 1-6, doi: 10.1109/ICNTE51185.2021.9487762.

[9]. M. L. De Klerk and A. K. Saha, "A Comprehensive Review of Advanced Traction Motor Control Techniques Suitable for Electric Vehicle Applications," in IEEE Access, vol. 9, pp. 125080-125108, 2021, doi: 10.1109/ACCESS.2021.3110736.

[10]. V. Totev, V. Gueorgiev and P. Rizov, "Regenerative braking of electric vehicles," 2019 11th Electrical Engineering Faculty Conference (BulEF), Varna, Bulgaria, 2019, pp. 1-5, doi: 10.1109/BulEF48056.2019.9030768.

[11]. L. Zhao, A. M. I. Mahbub and A. A. Malikopoulos, "Optimal Vehicle Dynamics and Powertrain Control for Connected and Automated Vehicles," 2019 IEEE Conference on Control Technology and Applications (CCTA), Hong Kong, China, 2019, pp. 33-38, doi: 10.1109/CCTA.2019.8920531.

[12]. J. Romo, E. Cañibano and J. C. Merino, "Lightweighting and passive safety for urban electric vehicle," 2017 Electric Vehicles International Conference (EV), Bucharest, Romania, 2017, pp. 1-5, doi: 10.1109/EV.2017.8242113.

[13]. C. H. T. Lee, W. Hua, T. Long, C. Jiang and L. V. Iyer, "A Critical Review of Emerging Technologies for Electric and Hybrid Vehicles," in IEEE Open Journal of Vehicular Technology, vol. 2, pp. 471-485, 2021, doi: 10.1109/OJVT.2021.3138894.

[14]. Sinha, R., and Bangia, S. (2021). Performance Analysis of Electric Vehicle Based on Various Working Scenarios. International Transaction Journal of Engineering, Management, & Applied Sciences & Technologies, 12(1), 12A1R, 1-15. http://TUENGR.COM/V12/12A1R.pdf DOI: 10.14456/ITJEMAST.2021.18

[15]. L. Zhao and Z. Jin, "Analysis of Intelligent Vehicle Climbing Force and Battery Selection," 2019 IEEE International Conference on Mechatronics and Automation (ICMA), Tianjin, China, 2019, pp. 2395-2400, doi: 10.1109/ICMA.2019.8816496.

[16]. S. Raveena and M. A. Berlin, "Broadcasting weather report to vehicles in urban roads," 2017 International Conference on Inventive Systems and Control (ICISC), Coimbatore, India, 2017, pp. 1-5, doi: 10.1109/ICISC.2017.8068624.

[17]. K. Zhou, H. Fang and Y. Liu, "Driving–Charging Integrated Controller for Electric Vehicles," in IEEE Access, vol. 10, pp. 66545-66563, 2022, doi: 10.1109/ACCESS.2022.3185261.

[18]. J. Fan, "Solar Powered Golf Cart: Testing and Performance Analyses," 2018 2nd International Conference on Green Energy and Applications (ICGEA), Singapore, 2018, pp. 74-78, doi: 10.1109/ICGEA.2018.8356302.

[19]. Rahman, Ziaur, Mehrdad Ehsani and K. L. Butler. "An investigation of electric motor drive characteristics for EV and HEV propulsion systems." *SAE Trans* (2000): 2396-2403.

[20]. Chang, Chih-Ming and Jheng-Cin Siao. "Performance analysis of EV powertrain system with/without transmission." *World Electr Veh J* 4 (2010): 629-634.

[21]. Mohamed, Nourhan and Nageh K. Allam. "Recent advances in the design of cathode materials for Li-ion batteries." *RSC advances* 10 (2020): 21662-21685.

[22]. Balasingam, Balakumar, Mostafa Ahmed and Krishna Pattipati. "Battery management systems—Challenges and some solutions." Energies 13 (2020): 2825.

[23]. Gabbar, Hossam A., Ahmed M. Othman and Muhammad R. Abdussami. "Review of Battery Management Systems (BMS) development and industrial standards." Technologies 9 (2021): 28.

[24]. Sanguesa, Julio A., Vicente Torres-Sanz, Piedad Garrido and Francisco J. Martinez, et al. "A review on electric vehicles: Technologies and challenges." Smart Cities 4 (2021): 372-404.

[25] Shaikh, M. A. (2019). Design of an Electric Golf Cart with Batteries & Solar Panel for 6 Seat Capacity. International Research Journal of Engineering and Technology (IRJET), 6(2), 2103-2122. https://www.irjet.net/archives/V6/i2/IRJET-V6I2416.pdf

[26] Du, Q., Pan, L., & Wu, Y. (2014). "Design of Research and Development on Golf Car." Biotechnology: An Indian Journal, 10(18), 10214-10219. Volume 10, Issue 18. College of Mechanical and Vehicle Engineering, Changchun University, Agriculture Product Processing Centre, Jilin Agri-Machinery Research Institute. Email: apriljuan@hotmail.com; panli636@126.com; wyljlnj@163.com. ISSN: 0974-7435.

[27] Patel, P. S., Nirajkumar, K., Sunil, P., Anil, K., & Ajit, P. (2020). Design and development of an electric hybrid rickshaw. International Journal of Advance Research and Innovative Ideas in Education (IJARIIE), 6(3), 1896-1904.

[28] Skill-Lync. (n.d.). Design of an electric vehicle using Simulink. Retrieved June 1, 2024, from https://skill-lync.com/student-projects/final-project-design-of-an-electric-vehicle-308