Components of a collaboration diagram

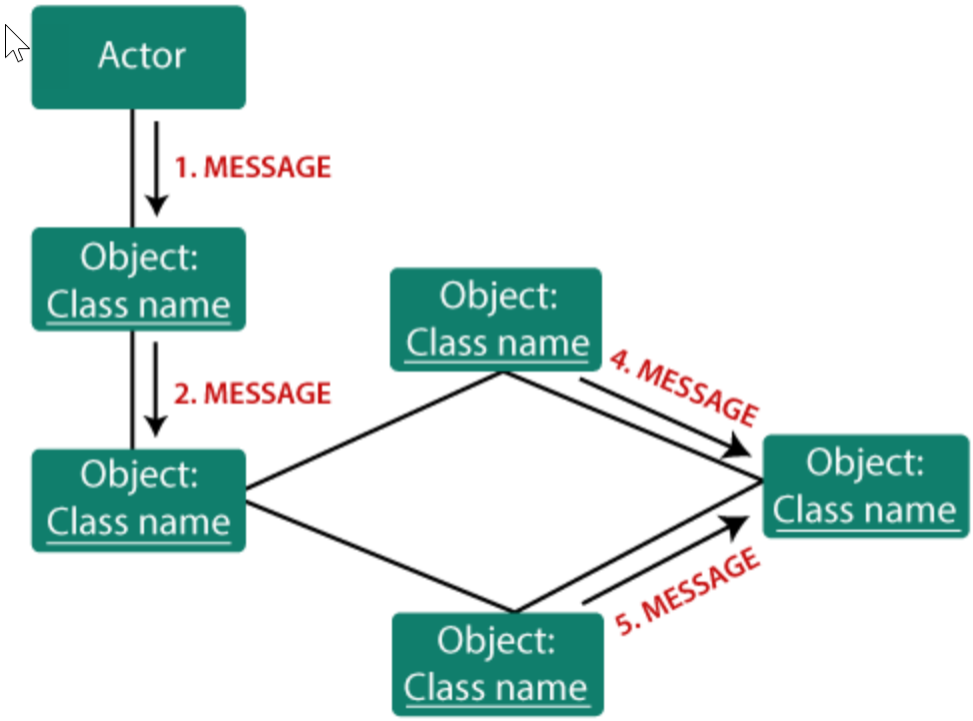

Example of a Collaboration Diagram

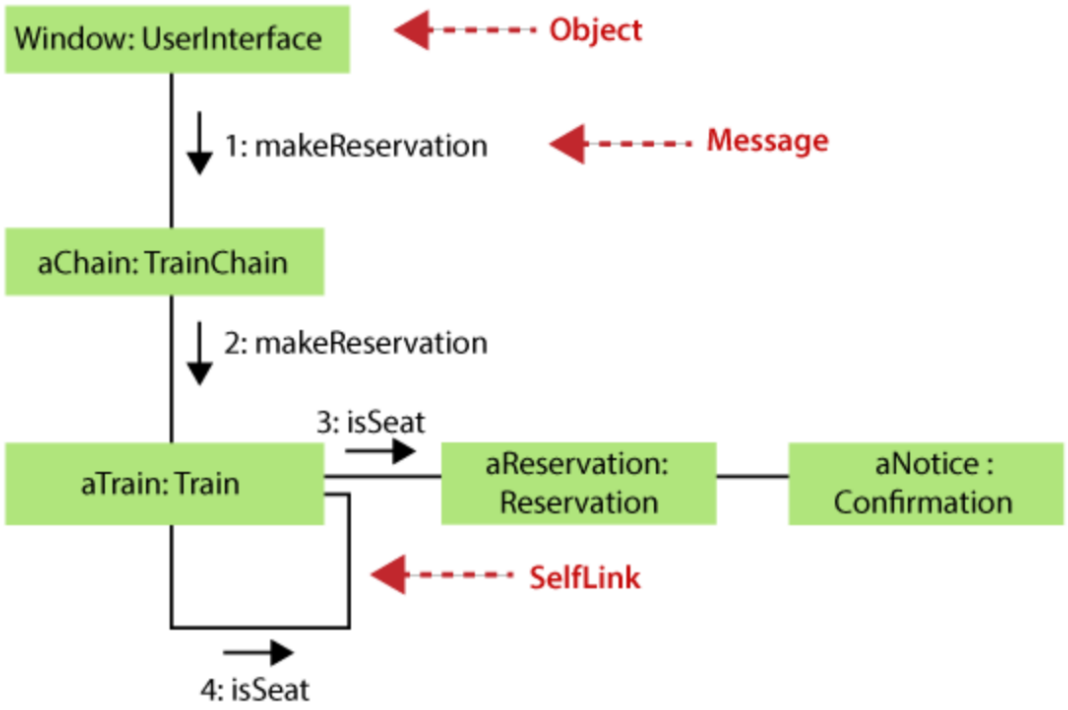

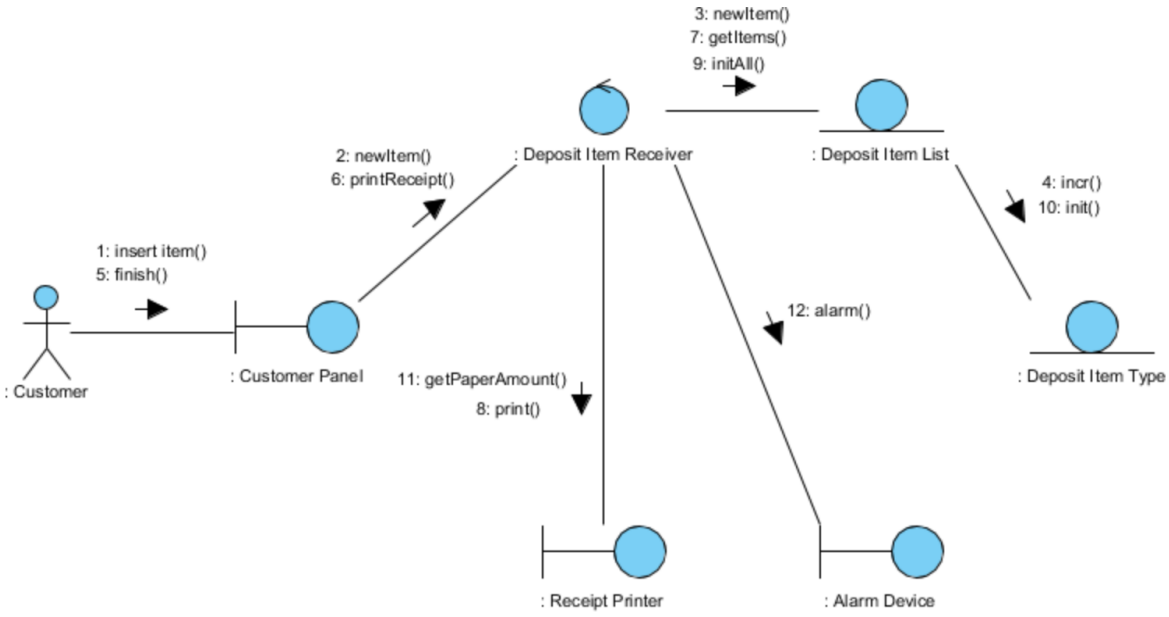

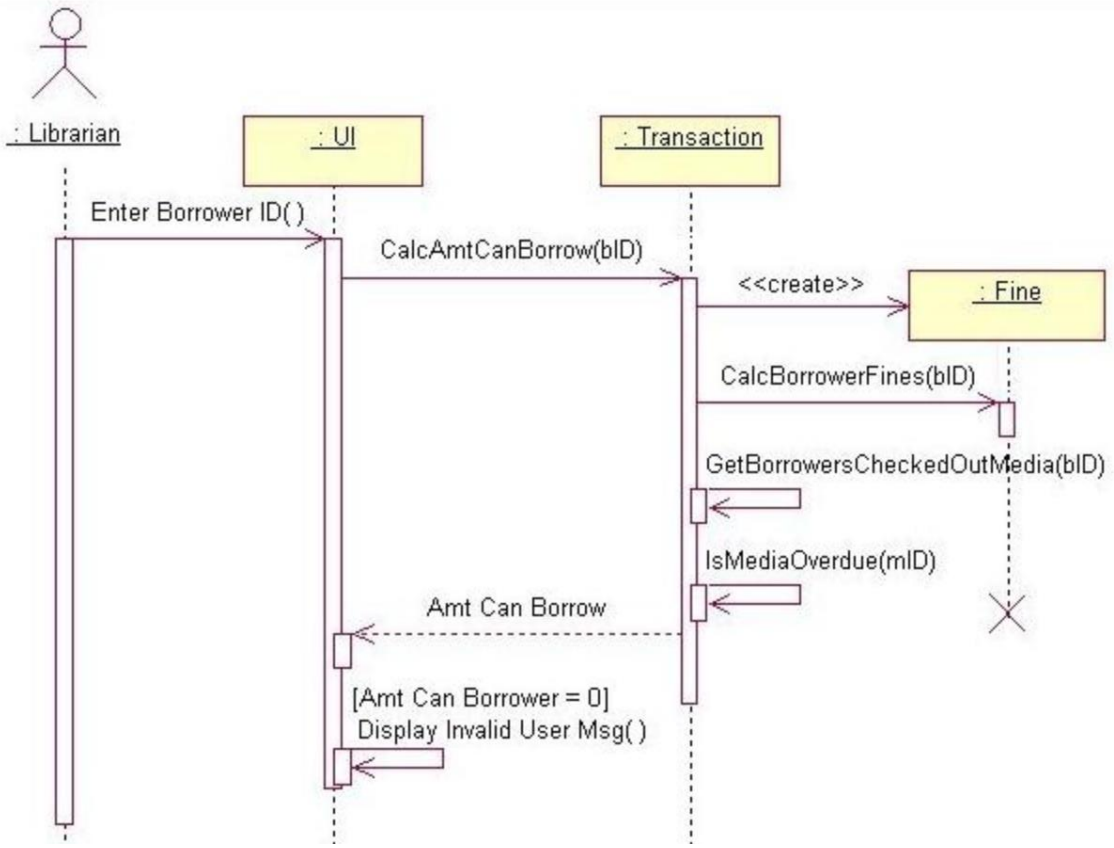
: Librarian
: UI
: Transaction
Enter Borrower ID( )
CalcAmtCanBorrow(bID)
<<create>>
: Fine
CalcBorrowerFines(bID)
GetBorrowersCheckedOutMedia(bID)
IsMediaOverdue(mID)
Amt Can Borrow
[Amt Can Borrower = 0]
Display Invalid User Msg( )

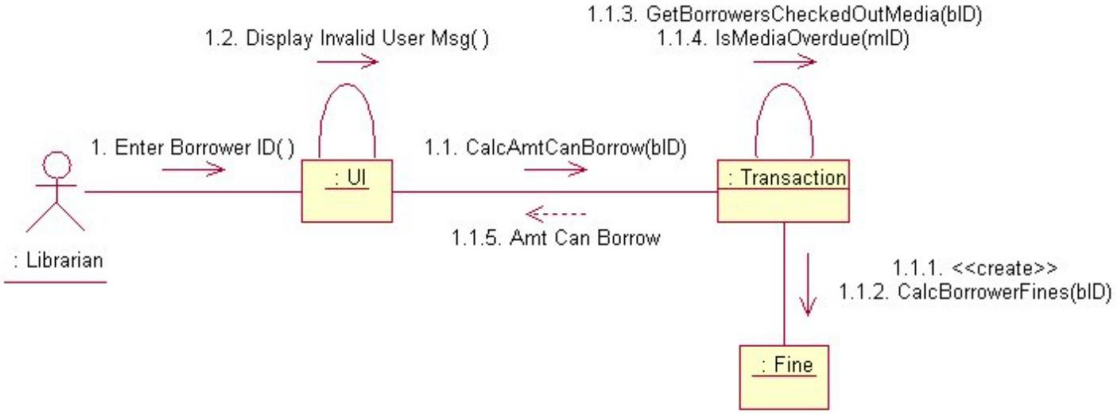
1.2. Display Invalid User Msg( )
1.1.3. GetBorrowersCheckedOutMedia(bID)
1.1.4. IsMediaOverdue(mID)
1. Enter Borrower ID( )
: UI
1.1. CalcAmtCanBorrow(bID)
: Transaction
1.1.5. Amt Can Borrow
: Librarian
1.1.1. <<create>>
1.1.2. CalcBorrowerFines(bID)
: Fine