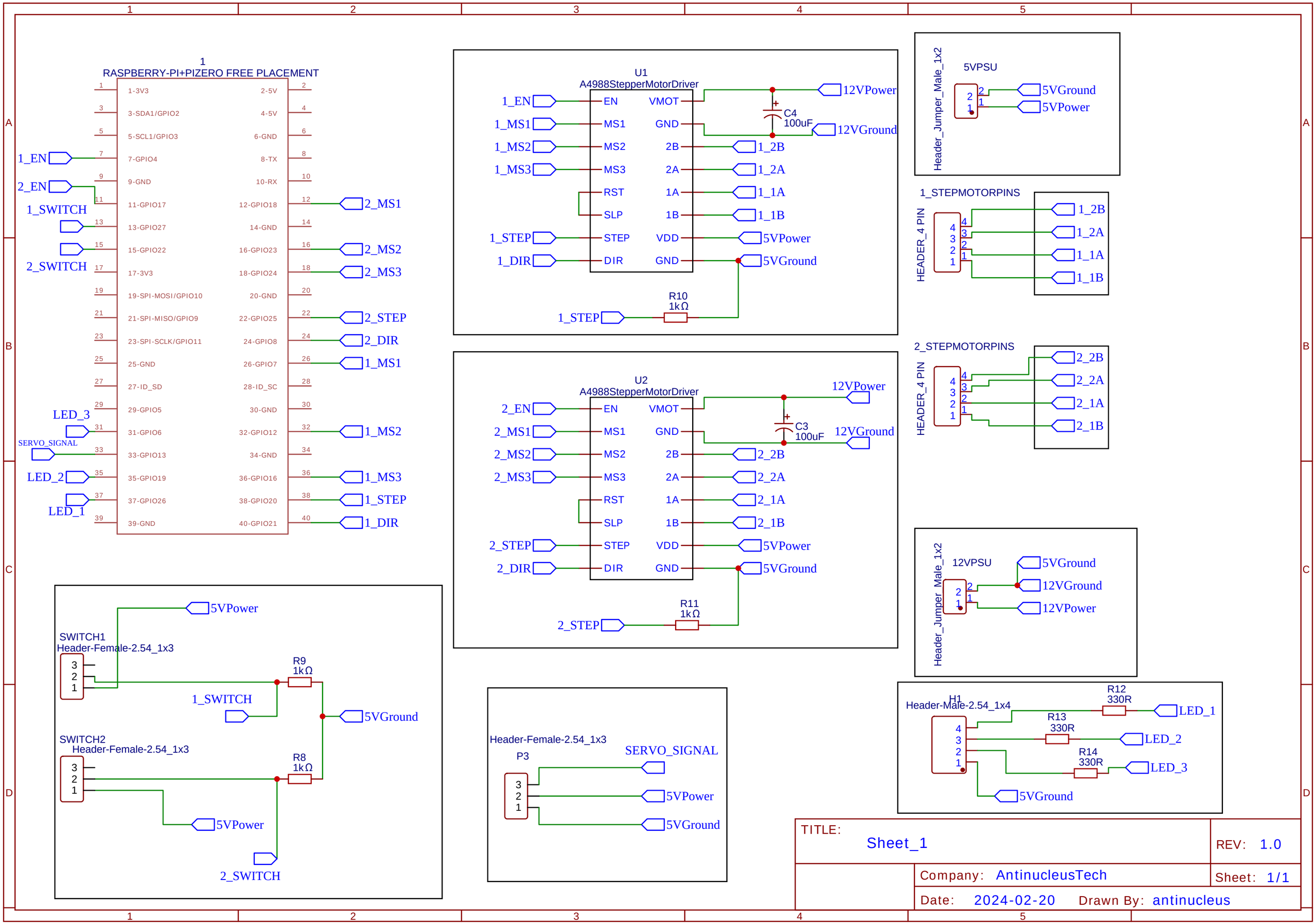
1
RASPBERRY-PI+PIZERO FREE PLACEMENT
1-3V3
2-5V
3-SDA1/GPIO2
4-5V
5-SCL1/GPIO3
6-GND
7-GPIO4
8-TX
9-GND
10-RX
11-GPIO17
12-GPIO18
13-GPIO27
14-GND
15-GPIO22
16-GPIO23
17-3V3
18-GPIO24
19-SPI-MOSI/GPIO10
20-GND
21-SPI-MISO/GPIO9
22-GPIO25
23-SPI-SCLK/GPIO11
24-GPIO8
25-GND
26-GPIO7
27-ID_SD
28-ID_SC
29-GPIO5
30-GND
31-GPIO6
32-GPIO12
33-GPIO13
34-GND
35-GPIO19
36-GPIO16
37-GPIO26
38-GPIO20
39-GND
40-GPIO21
1_EN
2_EN
1_SWITCH
2_SWITCH
LED_3
SERVO_SIGNAL
LED_2
LED_1
2_MS1
2_MS2
2_MS3
2_STEP
2_DIR
1_MS1
1_MS2
1_MS3
1_STEP
1_DIR
U1
A4988StepperMotorDriver
EN
MS1
MS2
MS3
RST
SLP
STEP
DIR
VMOT
GND
2B
2A
1A
1B
VDD
GND
12VPower
12VGround
C4
100uF
1_2B
1_2A
1_1A
1_1B
5VPower
5VGround
R10
1kΩ
U2
A4988StepperMotorDriver
C3
100uF
R11
1kΩ
Header_Jumper_Male_1x2
5VPSU
12VPSU
1_STEPMOTORPINS
2_STEPMOTORPINS
HEADER_4 PIN
SWITCH1
Header-Female-2.54_1x3
SWITCH2
R9
1kΩ
R8
1kΩ
P3
H1
Header-Male-2.54_1x4
R12
330R
R13
330R
R14
330R
TITLE:
Sheet_1
REV: 1.0
Company: AntinucleusTech
Sheet: 1/1
Date: 2024-02-20
Drawn By: antinucleus