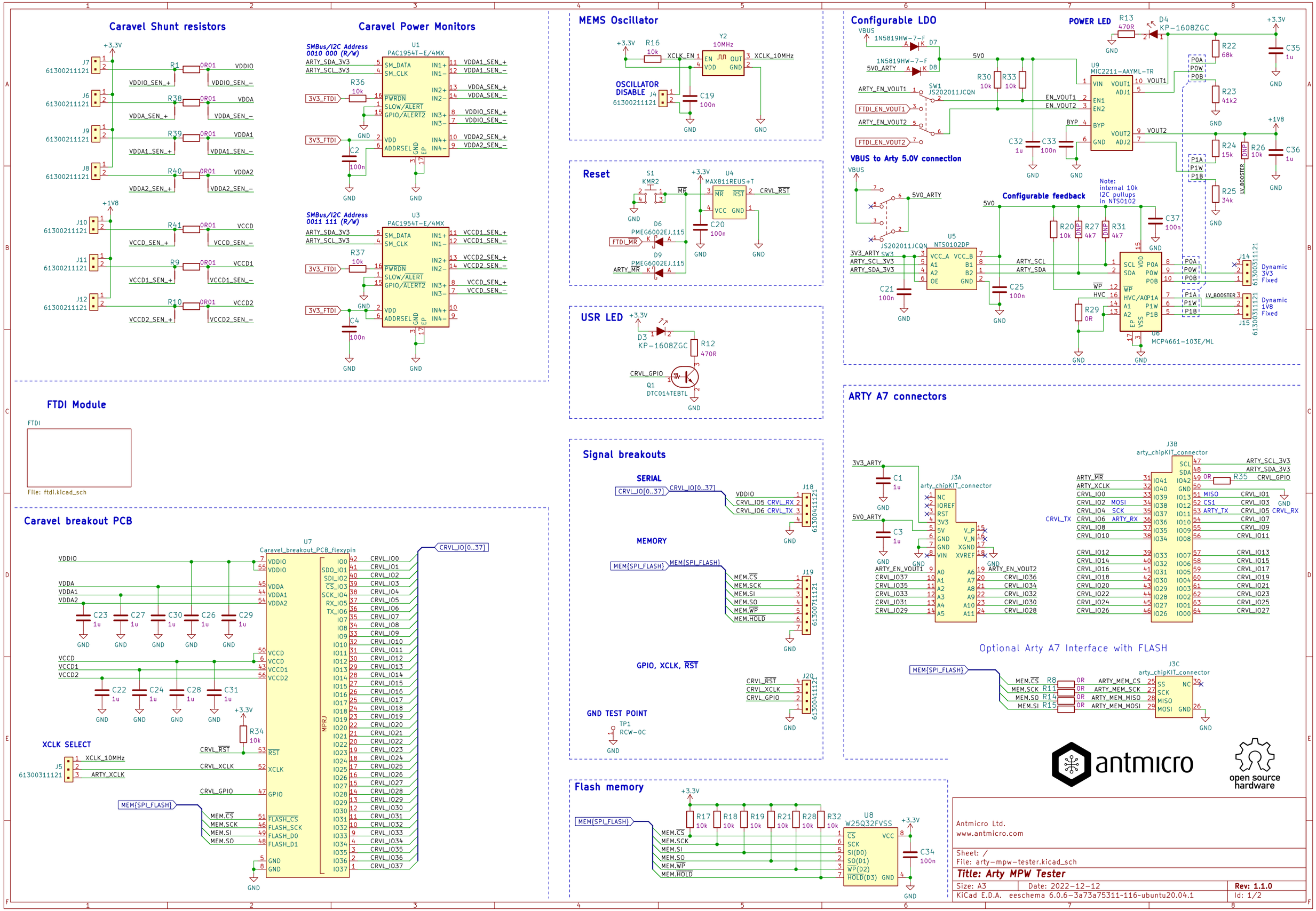
Caravel Shunt resistors
Caravel Power Monitors
MEMS Oscillator
Configurable LDO
POWER LED
VBUS to Arty 5.0V connection
Configurable feedback
Reset
USR LED
FTDI Module
ARTY A7 connectors
Signal breakouts
SERIAL
MEMORY
GPIO, XCLK, RST
GND TEST POINT
Caravel breakout PCB
XCLK SELECT
Flash memory
Optional Arty A7 Interface with FLASH
antmicro
open source hardware
Antmicro Ltd.
www.antmicro.com
Sheet: /
File: arty-mpw-tester.kicad_sch
Title: Arty MPW Tester
Size: A3
Date: 2022-12-12
Rev: 1.1.0
KiCad E.D.A. eeschema 6.0.6-3a73a75311-116-ubuntu20.04.1
Id: 1/2

## USB-C Debug

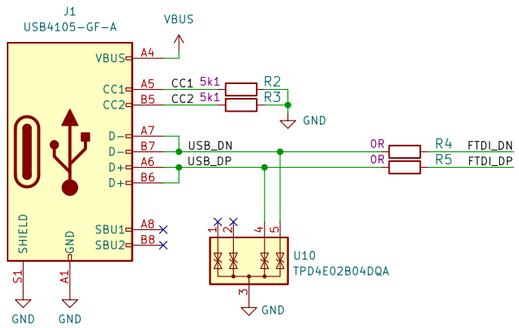


## Power Supply

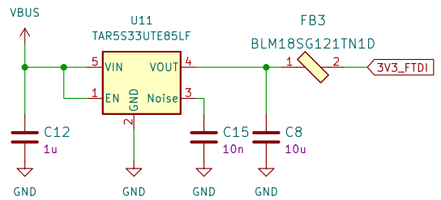


## FTDI Module

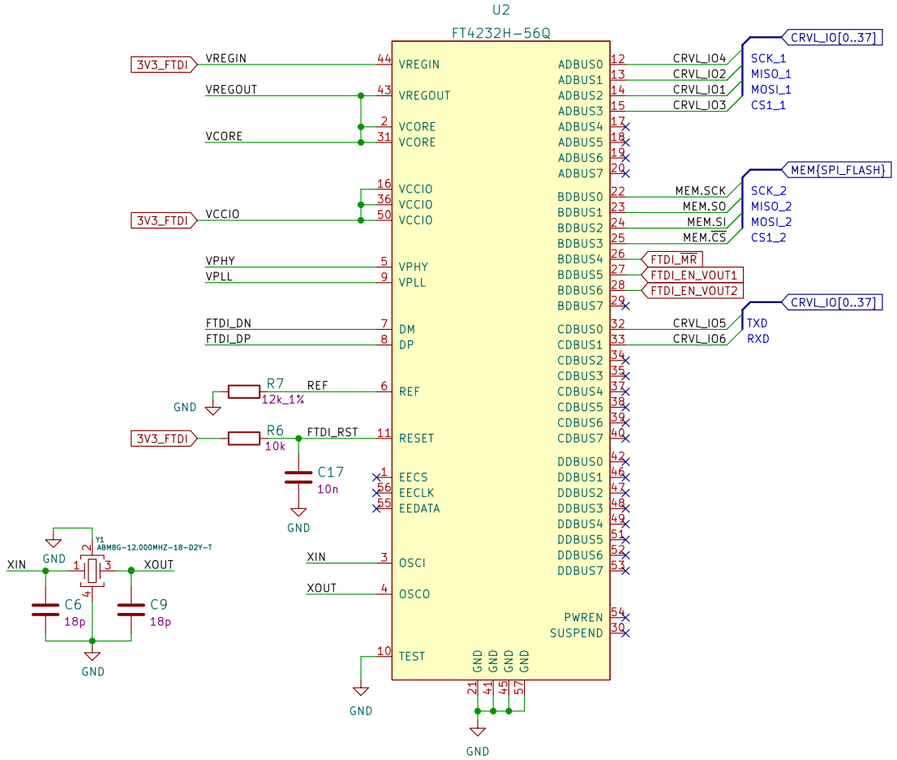


## Decoupling

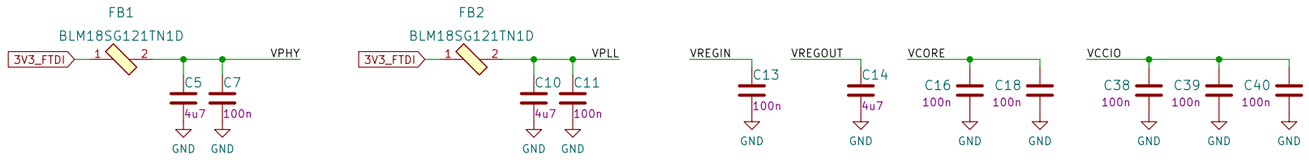


Sheet: /FTDI/
File: ftdi.kicad_sch

**Title:**

| Size: A3 | Date: | Rev: |
|---|---|---|
| KiCad E.D.A. eeschema 6.0.6-3a73a75311-116-ubuntu20.04.1 | | Id: 2/2 |