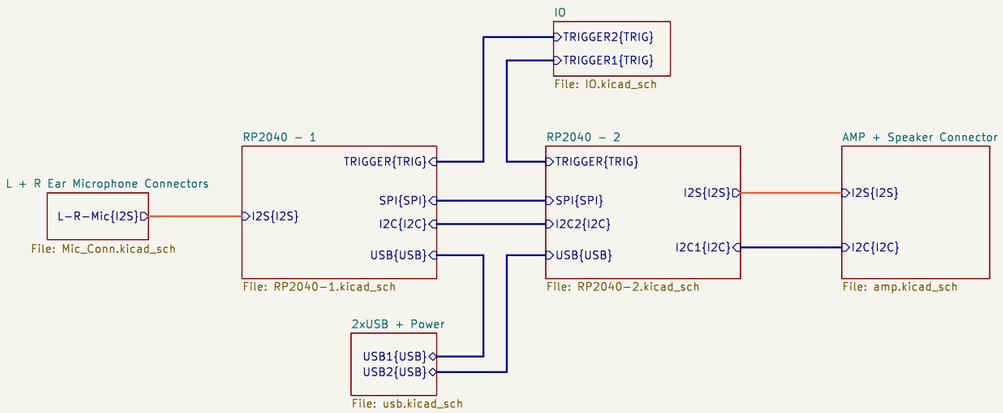

Sheet: /
File: audio–latency–processing–board.kicad_sch

Title: audio–latency–processing–board

Size: A3	Date: 2025–01–07	**Rev: 1.1.0:59c3c**
KiCad E.D.A. 8.0.7		Id: 1/7

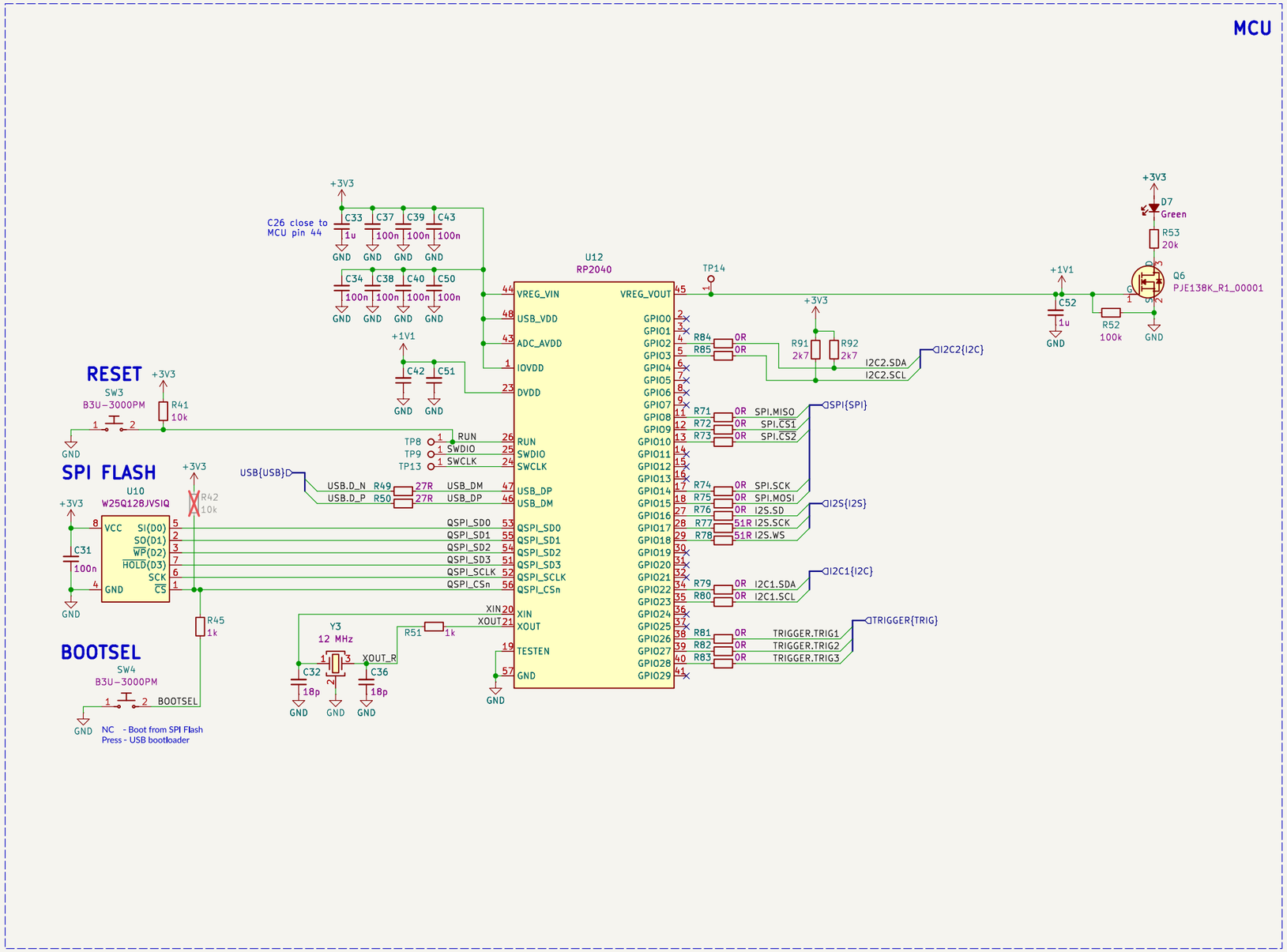

Sheet: /RP2040 - 2/
File: RP2040-2.kicad_sch

Title: audio-latency-processing-board

Size: A3	Date: 2025-01-07	Rev: 1.1.0:59c3c
KiCad E.D.A. 8.0.7		Id: 2/7

AMP

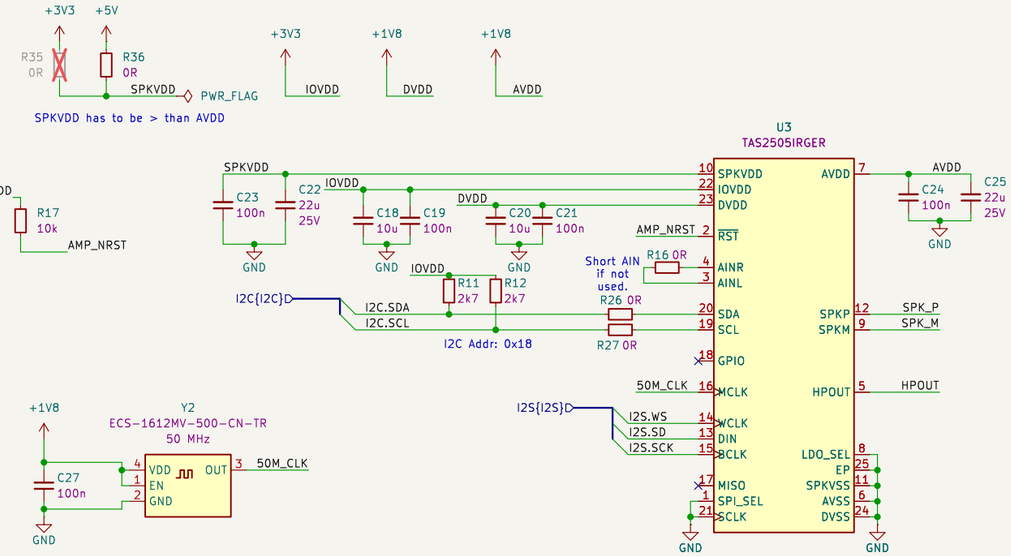

Speaker conn

2.6 W (4Ω, 5.5 V)
1.7 W (8 Ω, 5.5 V)

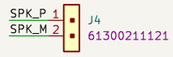

Headphones 3.5mm Jack

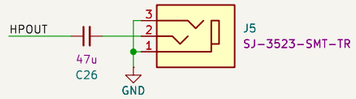

Debug I2C Conn

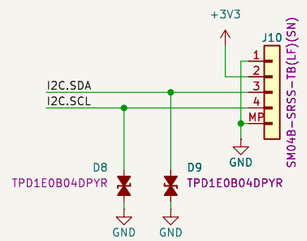

Debug I2S Conn

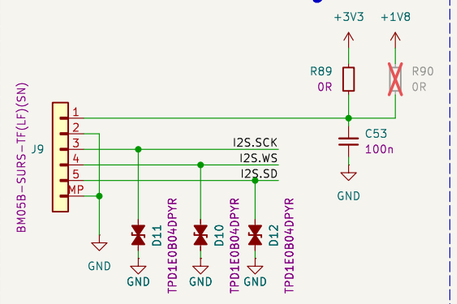

Sheet: /AMP + Speaker Connector/		
File: amp.kicad_sch		
Title: audio-latency-processing-board		
Size: A3	Date: 2025-01-07	**Rev: 1.1.0:59c3c**
KiCad E.D.A. 8.0.7		Id: 5/7

MCU

C26 close to MCU pin 44

+3V3 C10 1u GND · C13 100n GND · C15 100n GND · C28 100n GND

C11 100n GND · C14 100n GND · C16 100n GND · C29 100n GND

+1V1 C17 GND · C30 GND

U9 RP2040

VREG_VIN 44 · USB_VDD 48 · ADC_AVDD 43 · IOVDD 1 · DVDD 23

VREG_VOUT 45 → TP15 → +1V1 · C35 1u GND · R57 100k · GND

+3V3 → D6 Green → R58 20k → Q7 PJE138K_R1_00001

GPIO0 2 · GPIO1 3 · GPIO2 4 · GPIO3 5 · GPIO4 6 · GPIO5 7 · GPIO6 8 · GPIO7 9 · GPIO8 11 · GPIO9 12 · GPIO10 13 · GPIO11 14 · GPIO12 15 · GPIO13 16 · GPIO14 17 · GPIO15 18 · GPIO16 27 · GPIO17 28 · GPIO18 29 · GPIO19 30 · GPIO20 31 · GPIO21 32 · GPIO22 34 · GPIO23 35 · GPIO24 36 · GPIO25 37 · GPIO26 38 · GPIO27 39 · GPIO28 40 · GPIO29 41

R54 0R SPI.MISO · R59 0R SPI.CS1 · R67 0R SPI.CS2 → SPI{SPI}

R60 0R SPI.SCK · R61 0R SPI.MOSI · R66 0R I2S.SD · R65 51R I2S.SCK · R64 51R I2S.WS → I2S{I2S}

R62 0R I2C.SDA · R63 0R I2C.SCL → I2C{I2C}

R68 0R TRIGGER.TRIG1 · R69 0R TRIGGER.TRIG2 · R70 0R TRIGGER.TRIG3 → TRIGGER{TRIG}

RESET

SW1 B3U-3000PM · +3V3 · R40 10k · GND

TP10 RUN 26 · TP11 SWDIO 25 · TP12 SWCLK 24

SPI FLASH

U7 W25Q128JVSIQ

+3V3 · C8 100n GND · R43 10k

VCC 8 · GND 4 · SI(D0) 5 · SO(D1) 2 · WP(D2) 3 · HOLD(D3) 7 · SCK 6 · CS 1 · R44 1k

USB{USB} · USB.D_N R46 27R USB_DM 47 · USB.D_P R47 27R USB_DP 46

QSPI_SD0 53 · QSPI_SD1 55 · QSPI_SD2 54 · QSPI_SD3 51 · QSPI_SCLK 52 · QSPI_CSn 56

XIN 20 · XOUT 21 · Y1 12 MHz · R48 1k · XOUT_R · C9 18p GND · C12 18p GND

TESTEN 19 · GND 57

BOOTSEL

SW2 B3U-3000PM · BOOTSEL · GND

NC - Boot from SPI Flash
Press - USB bootloader

Sheet: /RP2040 - 1/	
File: RP2040-1.kicad_sch	
Title: audio-latency-processing-board	
Size: A3	Date: 2025-01-07
KiCad E.D.A. 8.0.7	Id: 6/7

Rev: 1.1.0:59c3c

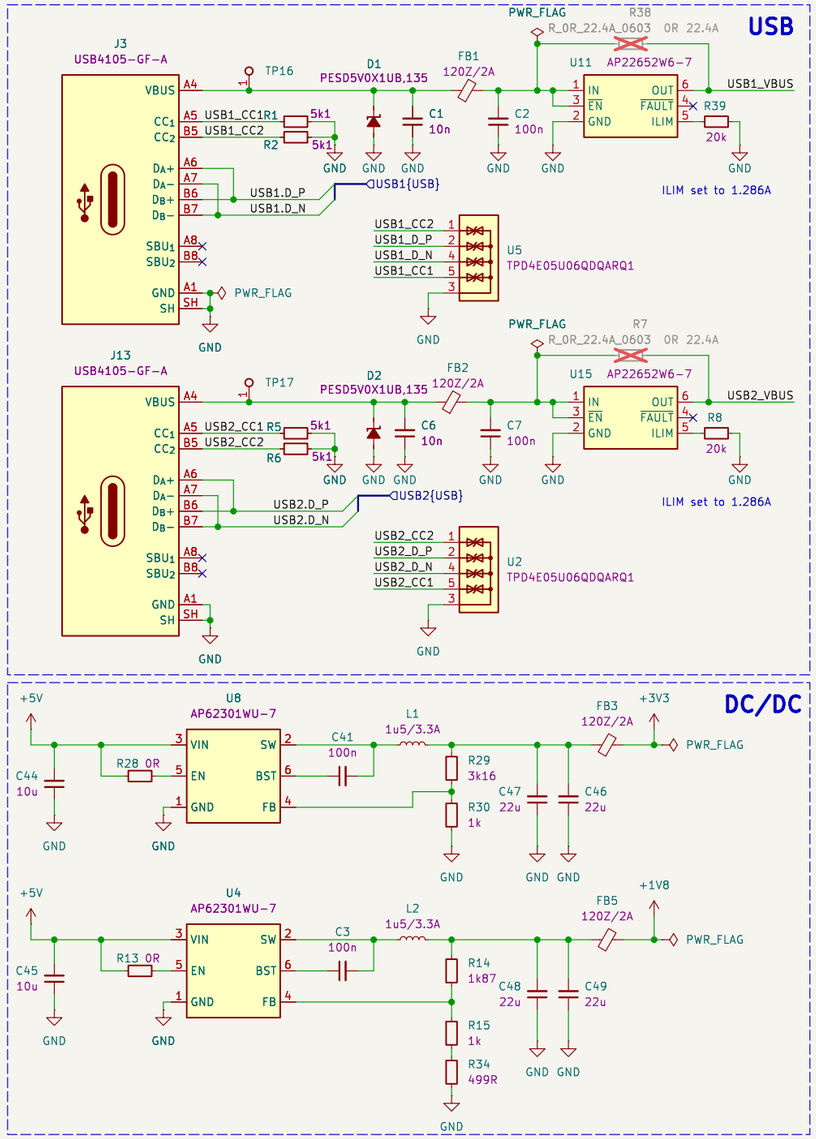

Sheet: /2xUSB + Power/		
File: usb.kicad_sch		
Title: audio-latency-processing-board		
Size: A3	Date: 2025-01-07	**Rev: 1.1.0:59c3c**
KiCad E.D.A. 8.0.7		Id: 6/7

L_MIC

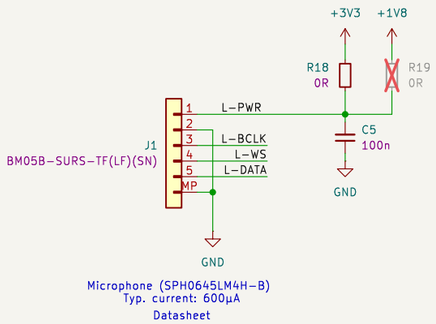

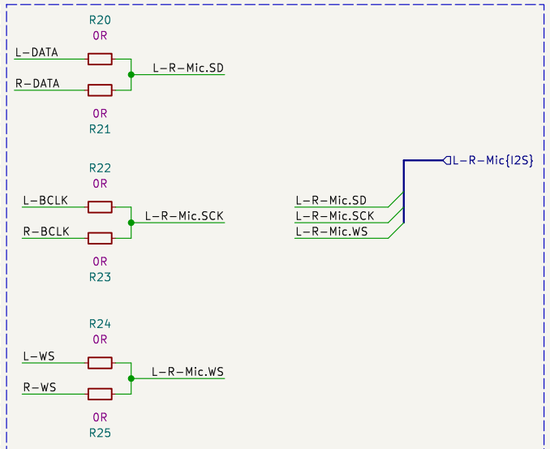

R_MIC

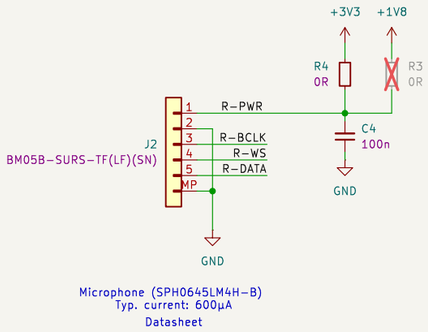

ESD

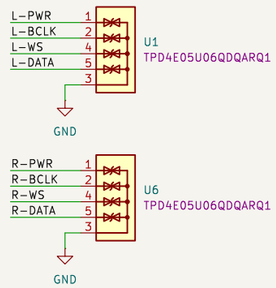

Debug I2S Conn

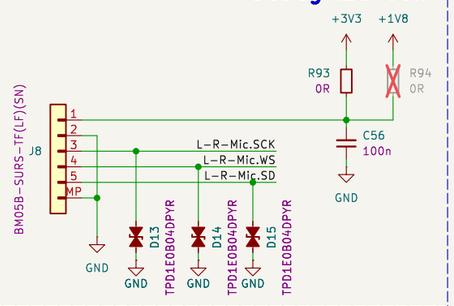

Sheet: /L + R Ear Microphone Connectors/
File: Mic_Conn.kicad_sch

Title: audio-latency-processing-board

Size: A3	Date: 2025-01-07	**Rev: 1.1.0:59c3c**
KiCad E.D.A. 8.0.7		Id: 7/7

External Triggers

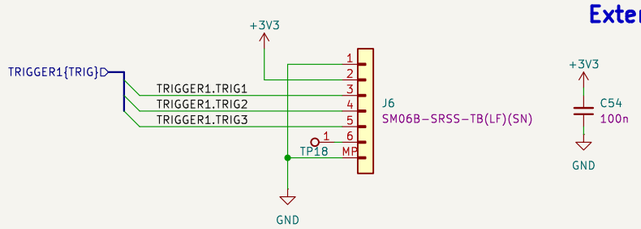

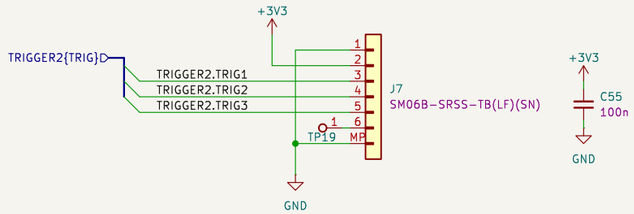

Trigger

Sheet: /IO/		
File: IO.kicad_sch		
Title: audio-latency-processing-board		
Size: A3	Date: 2025-01-07	**Rev: 1.1.0:59c3c**
KiCad E.D.A. 8.0.7		Id: 7/7