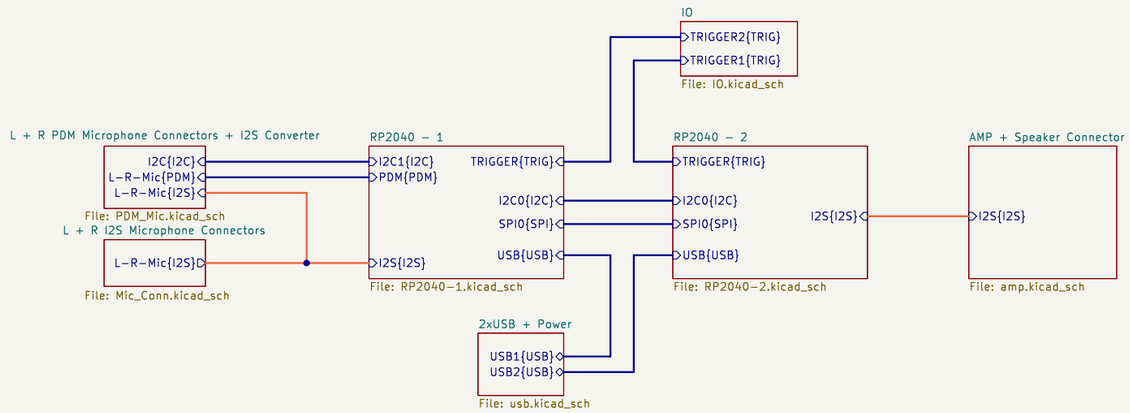


MP1
MP_NPTH_Drill2.7mm

MP2
MP_NPTH_Drill2.7mm

MP3
MP_NPTH_Drill2.7mm

MP4
MP_NPTH_Drill2.7mm

antmicro

open source hardware

| | | |
|---|---|---|
| Sheet: / | | |
| File: audio-controller-board.kicad_sch | | |
| **Title: Audio controller board** | | |
| Size: A3 | Date: 2025-04-03 | **Rev: 1.3.2:e889e** |
| KiCad E.D.A. 8.0.7 | | Id: 1/8 |

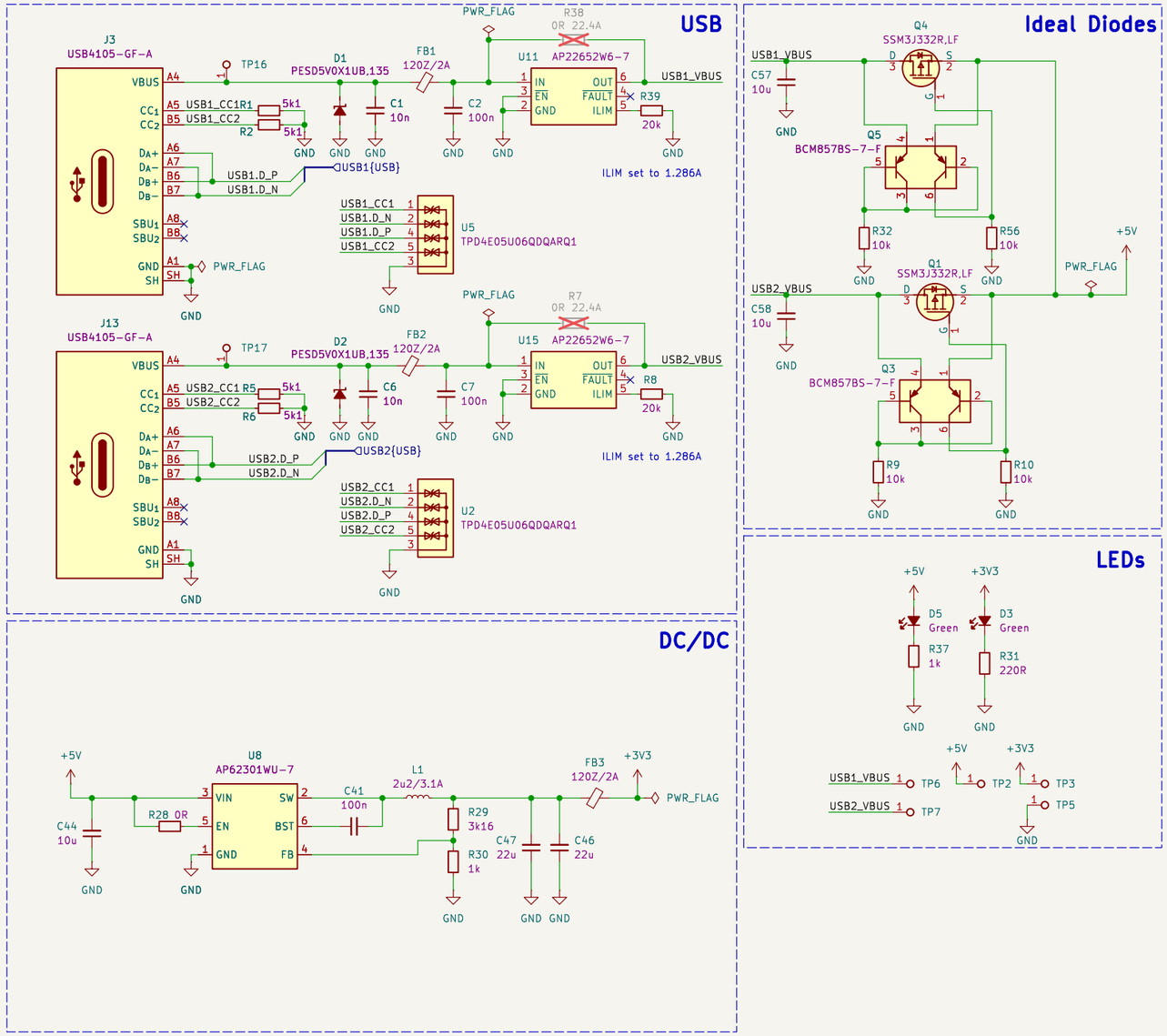


antmicro

open source hardware

Sheet: /2xUSB + Power/
File: usb.kicad_sch

**Title: Audio controller board**

| | | |
|---|---|---|
| Size: A3 | Date: 2025-04-03 | Rev: 1.3.2:e889e |
| KiCad E.D.A. 8.0.7 | | Id: 2/8 |

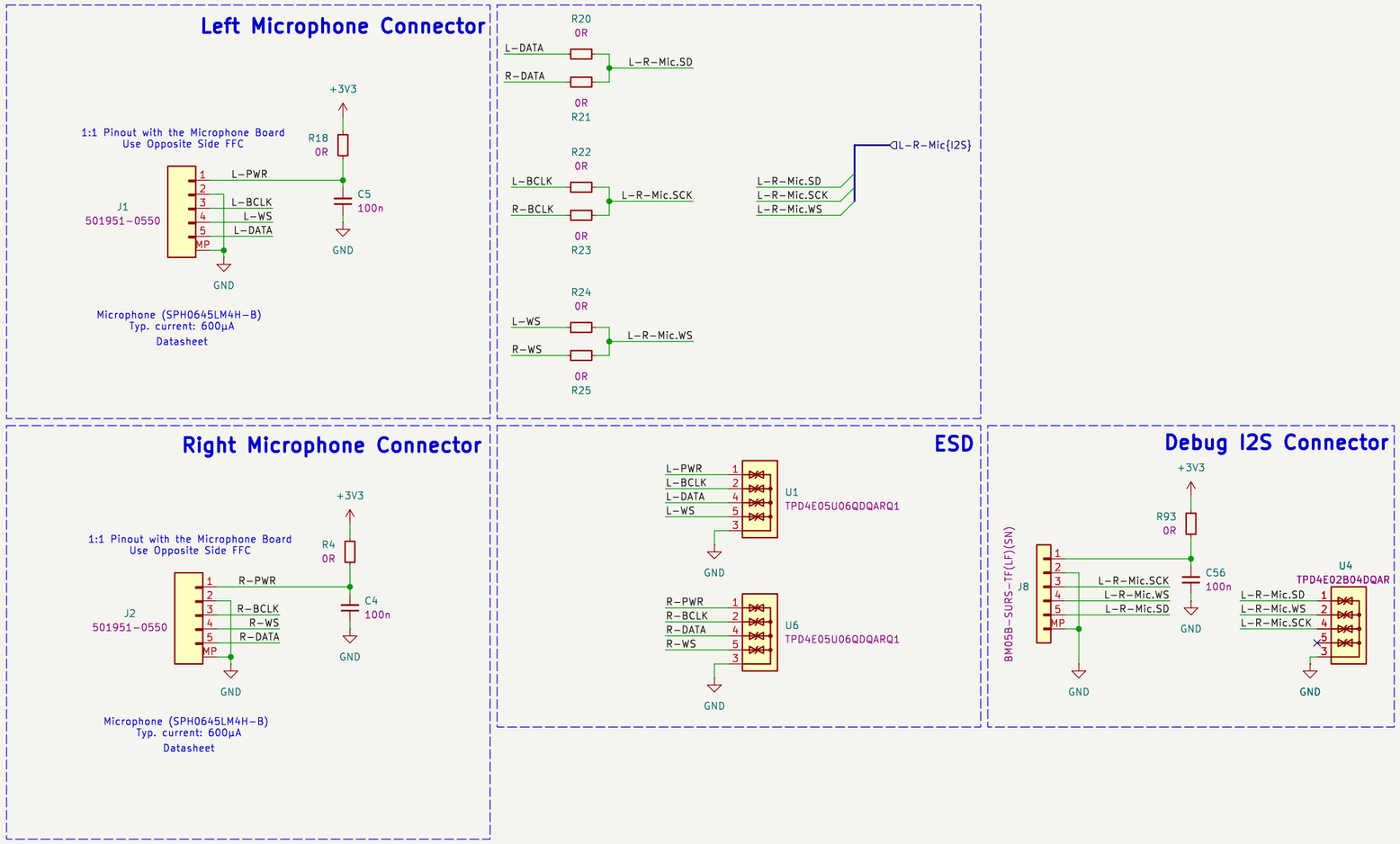


Sheet: /L + R I2S Microphone Connectors/
File: Mic_Conn.kicad_sch

**Title: Audio controller board**

| | | |
|---|---|---|
| Size: A3 | Date: 2025-04-03 | Rev: 1.3.2:e889e |
| KiCad E.D.A. 8.0.7 | | Id: 3/8 |

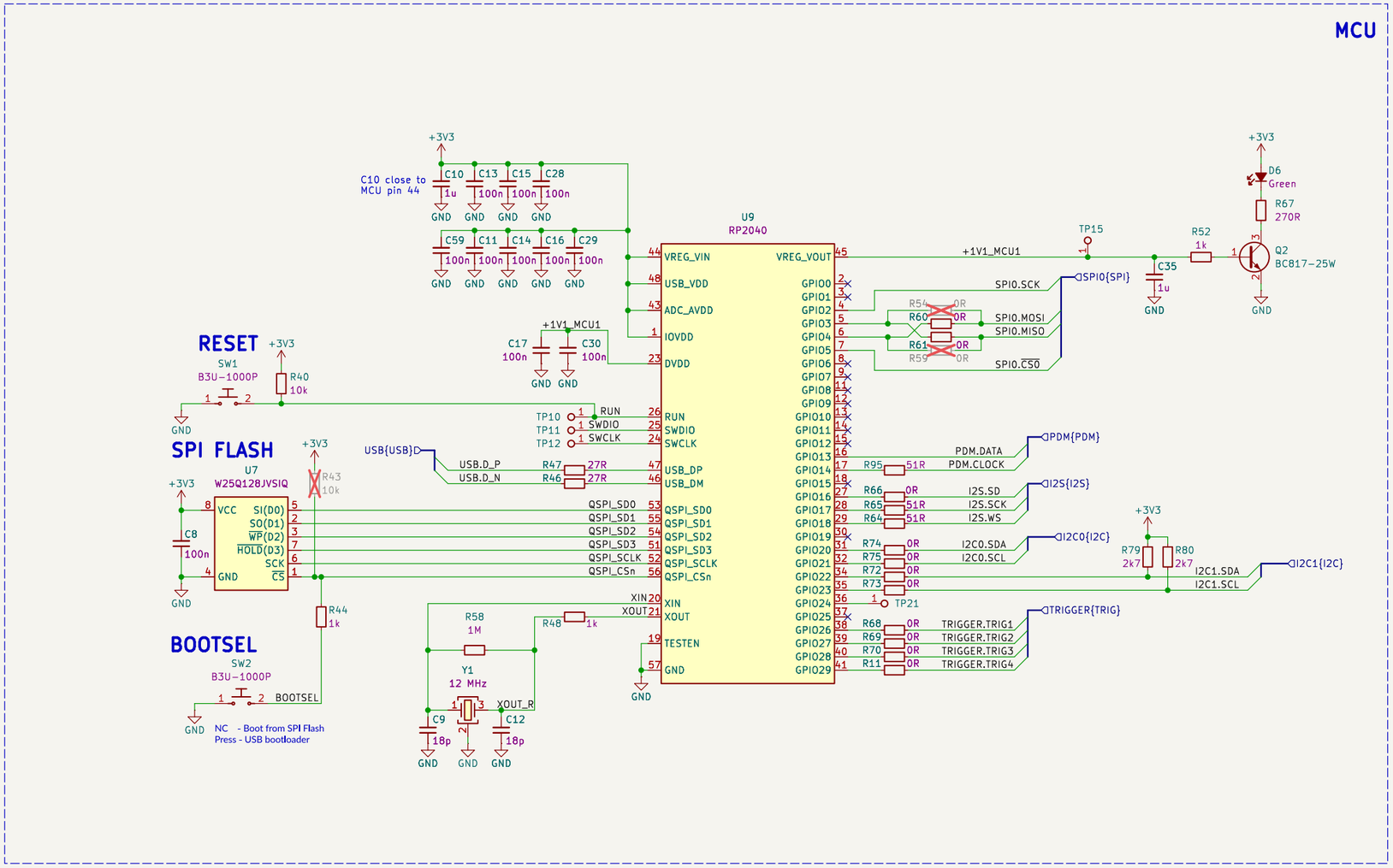


Sheet: /RP2040 – 1/
File: RP2040-1.kicad_sch

**Title: Audio controller board**

| | | |
|---|---|---|
| Size: A3 | Date: 2025-04-03 | Rev: 1.3.2:e889e |
| KiCad E.D.A. 8.0.7 | | Id: 4/8 |

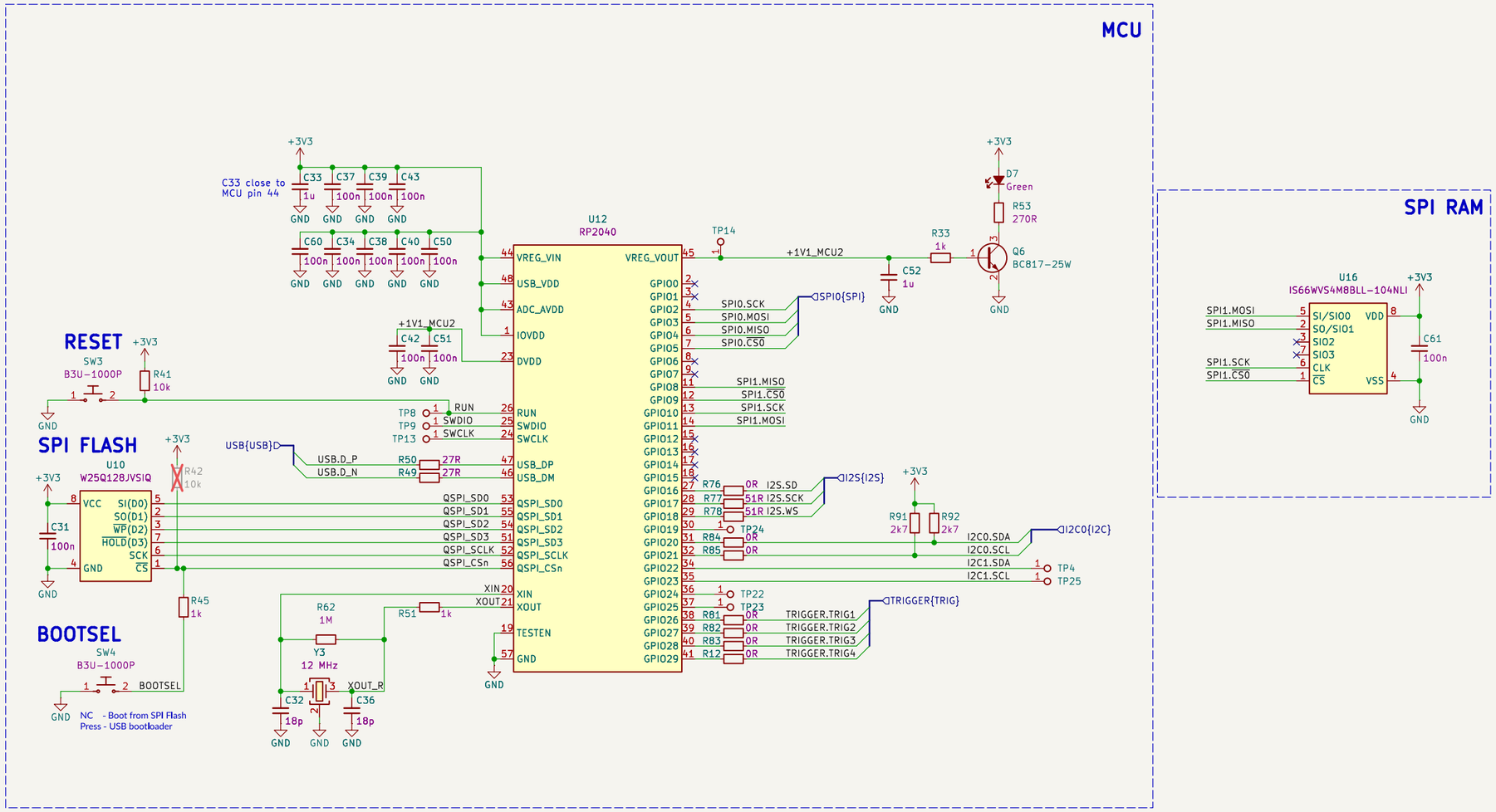


antmicro

open source hardware

Sheet: /RP2040 – 2/
File: RP2040-2.kicad_sch

**Title: Audio controller board**

| | | |
|---|---|---|
| Size: A3 | Date: 2025-04-03 | Rev: 1.3.2:e889e |
| KiCad E.D.A. 8.0.7 | | Id: 5/8 |

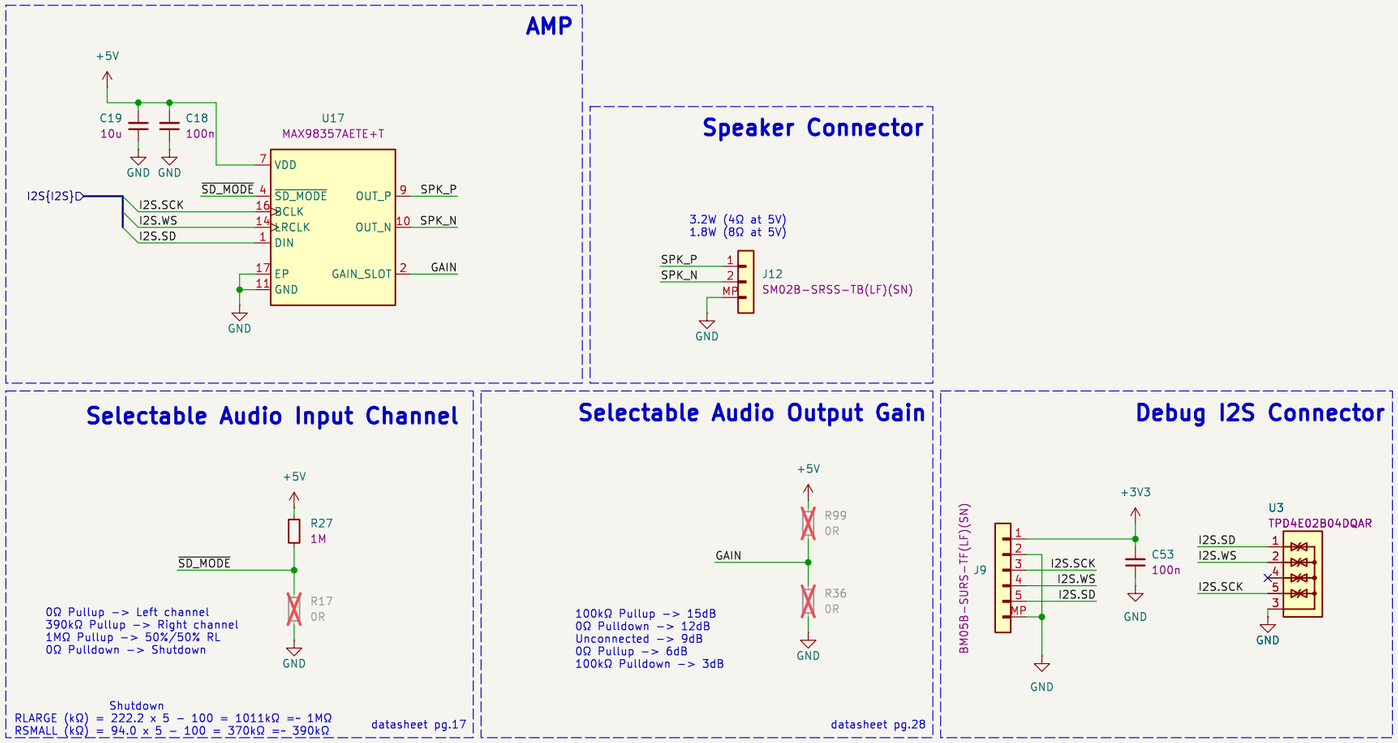


antmicro

open source hardware

Sheet: /AMP + Speaker Connector/
File: amp.kicad_sch

**Title: Audio controller board**

| | | |
|---|---|---|
| Size: A3 | Date: 2025-04-03 | Rev: 1.3.2:e889e |
| KiCad E.D.A. 8.0.7 | | Id: 6/8 |

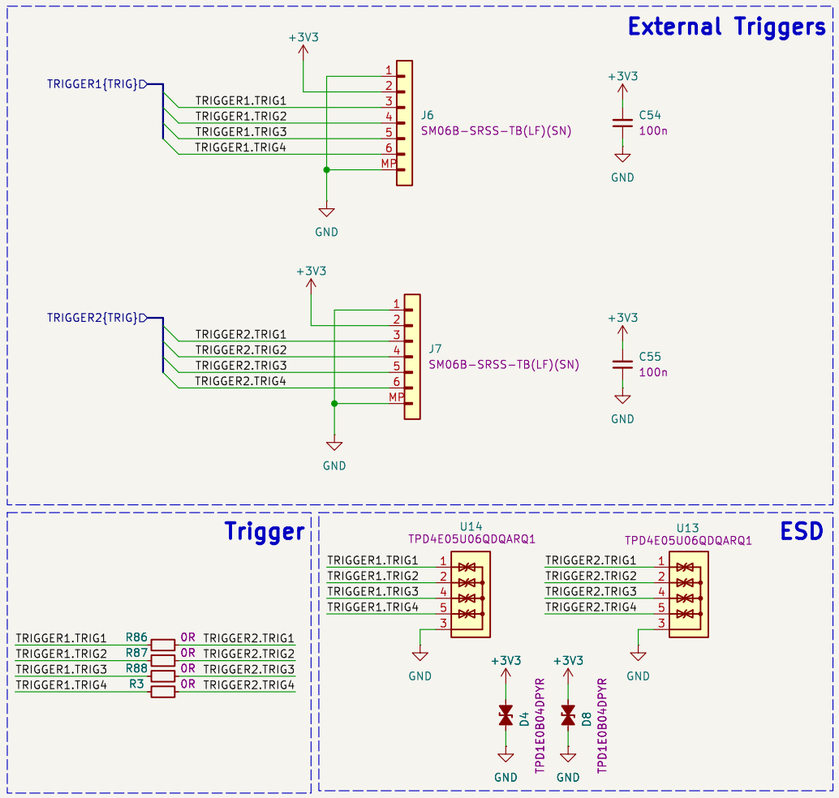


Sheet: /IO/
File: IO.kicad_sch

**Title: Audio controller board**

| | | |
|---|---|---|
| Size: A3 | Date: 2025-04-03 | Rev: 1.3.2:e889e |
| KiCad E.D.A. 8.0.7 | | Id: 7/8 |

## Left Microphone Connector

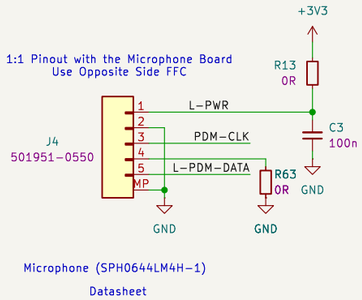


## Right Microphone Connector

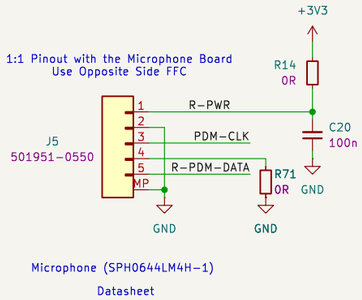


## ESD

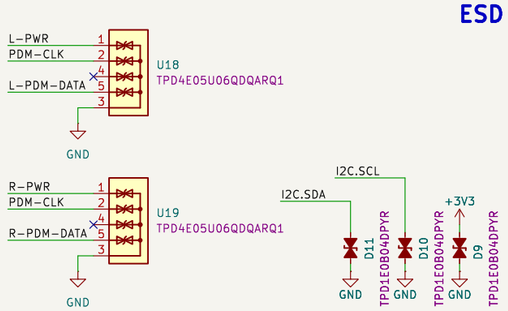


## PDM Destination Selection

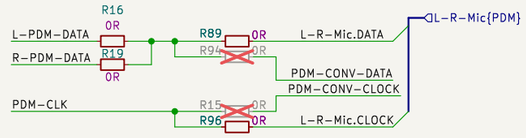


## PDM to I2S

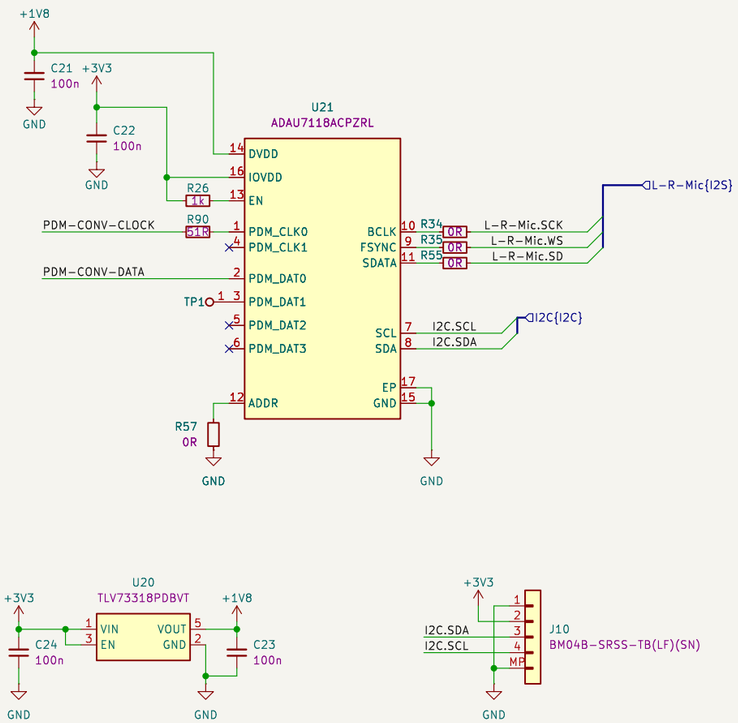


antmicro

open source hardware

Sheet: /L + R PDM Microphone Connectors + I2S Converter/
File: PDM_Mic.kicad_sch

**Title: Audio controller board**

| | | |
|---|---|---|
| Size: A3 | Date: 2025-04-03 | Rev: 1.3.2:e889e |
| KiCad E.D.A. 8.0.7 | | Id: 8/8 |