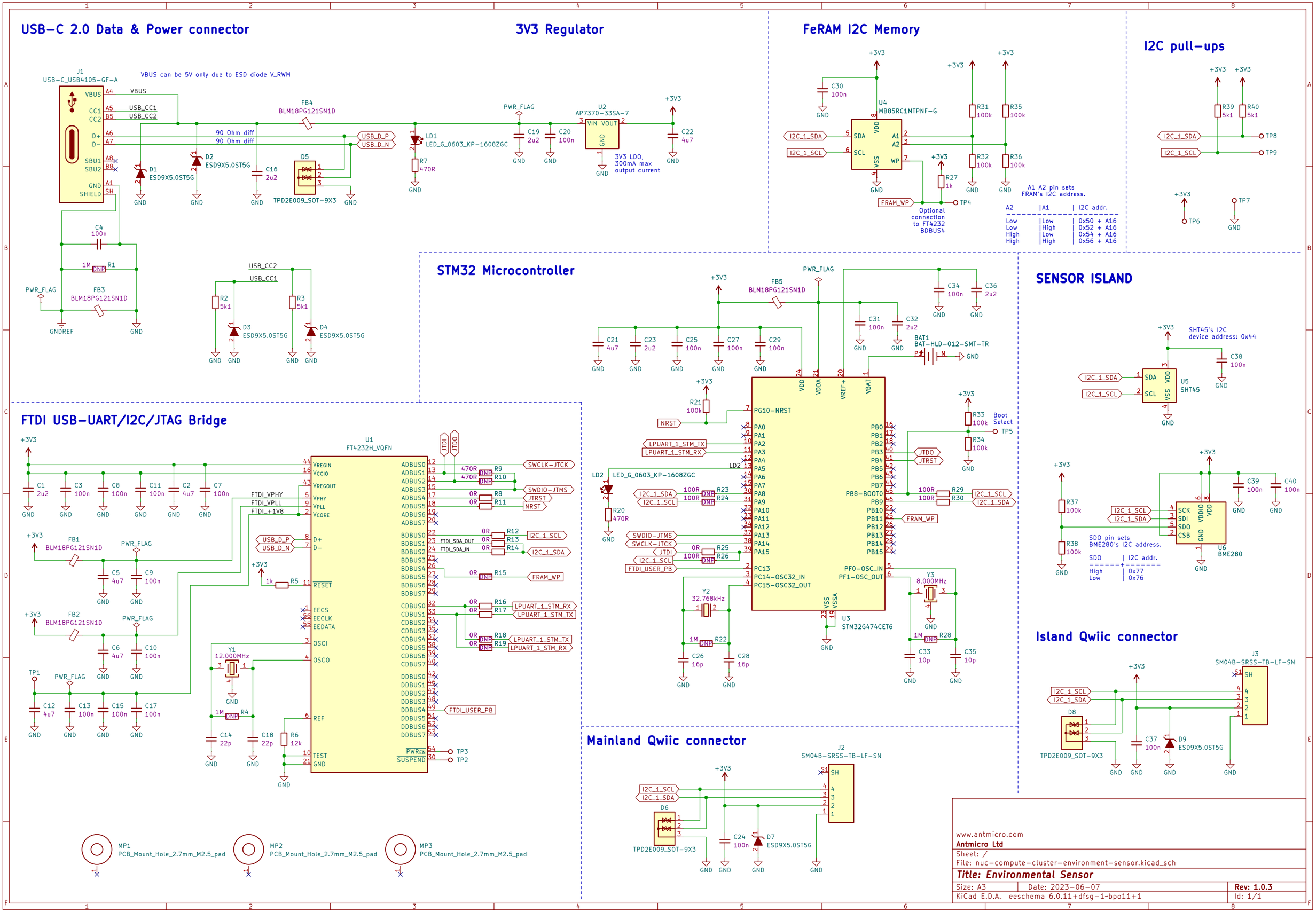
USB-C 2.0 Data & Power connector
J1
USB-C_USB4105-GF-A
VBUS can be 5V only due to ESD diode V_RWM
VBUS
CC1
CC2
D+
D-
SBU1
SBU2
GND
SHIELD
USB_CC1
USB_CC2
90 Ohm diff
90 Ohm diff
D1
ESD9X5.0ST5G
D2
ESD9X5.0ST5G
C16
2u2
D5
TPD2E009_SOT-9X3
FB4
BLM18PG121SN1D
USB_D_P
USB_D_N
C4
100n
1M
DNP
R1
PWR_FLAG
FB3
BLM18PG121SN1D
GNDREF
GND
R2
5k1
R3
5k1
D3
ESD9X5.0ST5G
D4
ESD9X5.0ST5G
3V3 Regulator
PWR_FLAG
U2
AP7370-33SA-7
VIN
VOUT
GND
3V3 LDO,
300mA max
output current
LD1
LED_G_0603_KP-1608ZGC
R7
470R
C19
2u2
C20
100n
C22
4u7
+3V3
FeRAM I2C Memory
U4
MB85RC1MTPNF-G
SDA
SCL
VDD
VSS
A1
A2
WP
I2C_1_SDA
I2C_1_SCL
C30
100n
R31
100k
R35
100k
R32
100k
R36
100k
R27
1k
FRAM_WP
TP4
Optional
connection
to FT4232
BDBUS4
A1 A2 pin sets
FRAM's I2C address.
A2 | A1 | I2C addr.
Low | Low | 0x50 + A16
Low | High | 0x52 + A16
High | Low | 0x54 + A16
High | High | 0x56 + A16
I2C pull-ups
R39
5k1
R40
5k1
TP8
TP9
TP6
TP7
STM32 Microcontroller
FB5
BLM18PG121SN1D
C21
4u7
C23
2u2
C25
100n
C27
100n
C29
100n
C31
100n
C32
2u2
C34
100n
C36
2u2
BAT1
BAT-HLD-012-SMT-TR
R21
100k
NRST
LPUART_1_STM_TX
LPUART_1_STM_RX
LD2
LED_G_0603_KP-1608ZGC
R20
470R
I2C_1_SDA
I2C_1_SCL
SWDIO-JTMS
SWCLK-JTCK
JTDI
FTDI_USER_PB
PG10-NRST
PA0
PA1
PA2
PA3
PA4
PA5
PA6
PA7
PA8
PA9
PA10
PA11
PA12
PA13
PA14
PA15
PC13
PC14-OSC32_IN
PC15-OSC32_OUT
PB0
PB1
PB2
PB3
PB4
PB5
PB6
PB7
PB8-BOOT0
PB9
PB10
PB11
PB12
PB13
PB14
PB15
PF0-OSC_IN
PF1-OSC_OUT
JTDO
JTRST
FRAM_WP
R33
100k
R34
100k
Boot
Select
TP5
R29
R30
Y2
32.768kHz
C26
16p
C28
16p
Y3
8.000MHz
C33
10p
C35
10p
R22
R28
U3
STM32G474CET6
SENSOR ISLAND
SHT45's I2C
device address: 0x44
U5
SHT45
C38
100n
R37
100k
R38
100k
C39
100n
C40
100n
U6
BME280
SDO pin sets
BME280's I2C address.
SDO | I2C addr.
High | 0x77
Low | 0x76
Island Qwiic connector
J3
SM04B-SRSS-TB-LF-SN
D8
TPD2E009_SOT-9X3
C37
100n
D9
ESD9X5.0ST5G
FTDI USB-UART/I2C/JTAG Bridge
U1
FT4232H_VQFN
VREGIN
VCCIO
VREGOUT
VPHY
VPLL
VCORE
FTDI_VPHY
FTDI_VPLL
FTDI_+1V8
RESET
EECS
EECLK
EEDATA
OSCI
OSCO
REF
TEST
GND
PWREN
SUSPEND
ADBUS0
ADBUS1
ADBUS2
ADBUS3
ADBUS4
ADBUS5
ADBUS6
ADBUS7
BDBUS0
BDBUS1
BDBUS2
BDBUS3
BDBUS4
BDBUS5
BDBUS6
BDBUS7
CDBUS0
CDBUS1
CDBUS2
CDBUS3
CDBUS4
CDBUS5
CDBUS6
CDBUS7
DDBUS0
DDBUS1
DDBUS2
DDBUS3
DDBUS4
DDBUS5
DDBUS6
DDBUS7
JTDI
JTDO
SWCLK-JTCK
SWDIO-JTMS
JTRST
NRST
I2C_1_SCL
I2C_1_SDA
FTDI_SDA_OUT
FTDI_SDA_IN
FRAM_WP
LPUART_1_STM_RX
LPUART_1_STM_TX
FTDI_USER_PB
TP3
TP2
Y1
12.000MHz
C14
22p
C18
22p
R6
12k
R4
C1
2u2
C3
100n
C8
100n
C11
100n
C2
4u7
C7
100n
FB1
BLM18PG121SN1D
FB2
BLM18PG121SN1D
C5
4u7
C9
100n
C6
4u7
C10
100n
R5
1k
TP1
C12
4u7
C13
100n
C15
100n
C17
100n
Mainland Qwiic connector
J2
SM04B-SRSS-TB-LF-SN
D6
TPD2E009_SOT-9X3
C24
100n
D7
ESD9X5.0ST5G
MP1
PCB_Mount_Hole_2.7mm_M2.5_pad
MP2
PCB_Mount_Hole_2.7mm_M2.5_pad
MP3
PCB_Mount_Hole_2.7mm_M2.5_pad
www.antmicro.com
Antmicro Ltd
Sheet: /
File: nuc-compute-cluster-environment-sensor.kicad_sch
Title: Environmental Sensor
Size: A3
Date: 2023-06-07
Rev: 1.0.3
KiCad E.D.A. eeschema 6.0.11+dfsg-1~bpo11+1
Id: 1/1